Quantity	1

Notes:

1. FABRICATOR TO CONFIRM QUANTITIES OF FIXTURES WITH CLIENT PRIOR TO FABRICATION
2. PROVIDE SHOP DRAWINGS FOR DESIGNER'S REVIEW AND APPROVAL PRIOR TO FABRICATION
3. FABRICATOR TO ENSURE STRUCTURAL STABILITY OF UNIT
4. FABRICATOR TO EXECUTE DESIGN IN THE MOST COST EFFECTIVE MANNER
5. ALL METAL TO BE GROUND SMOOTH AND CLEAN – NO SHARP EDGES
6. ENSURE TABLE IS LEVEL
7. ANY EXPOSED STONE EDGES TO BE BRUSHED FINISH

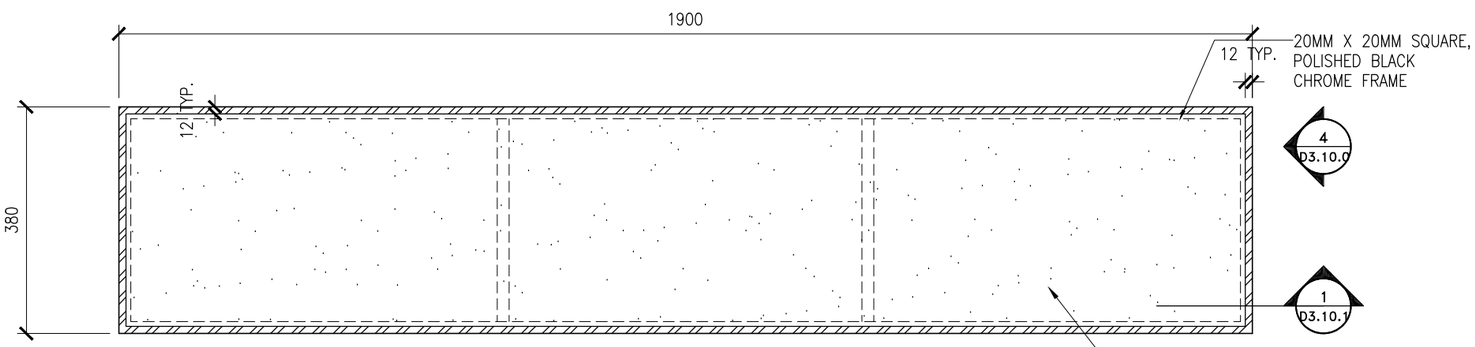

1 D3.10.0 PLAN
SCALE 1:10

3 D3.10.0
TYP.

2 D3.10.0 REFERENCE IMAGE
SCALE N.T.S

STONETOP; OLYMPIA TILE, ELEGANT BLACK, BRUSHED

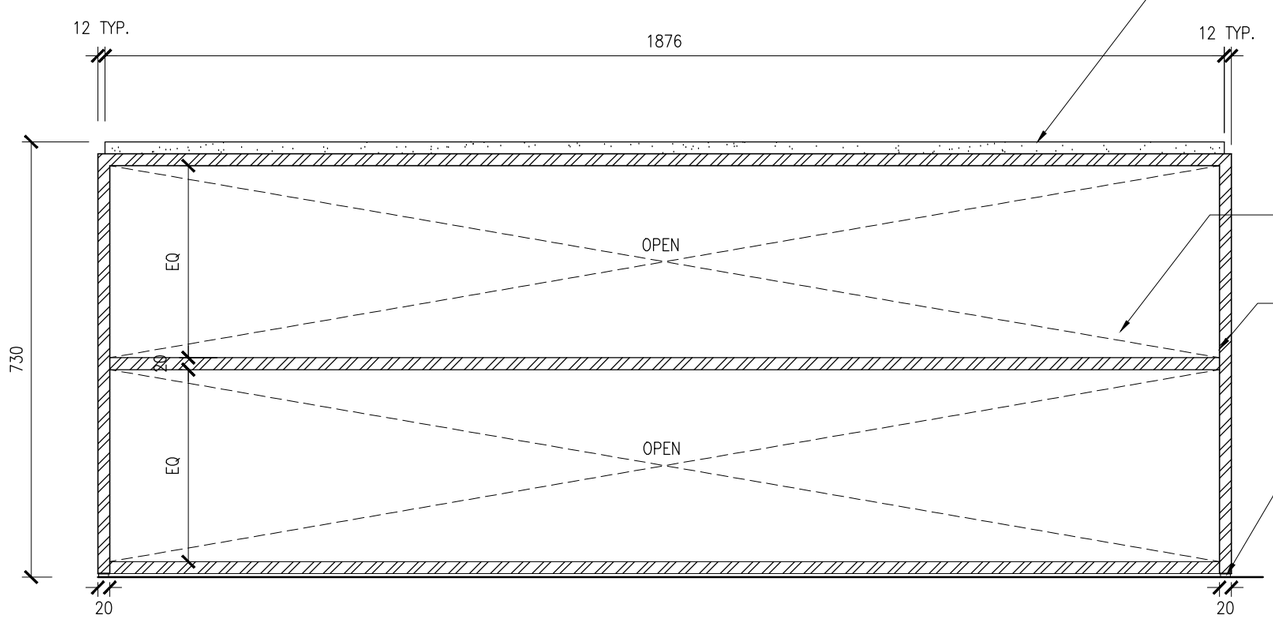

3 D3.10.0 ELEVATION
SCALE 1:10

METAL SHELF FINISHED ON ALL VISIBLE FACES

PROVIDE CONCEALED METAL SUPPORTS FOR SHELF TO MATCH FRAME FINISH

PROVIDE CONCEALED LEVELERS AND NYLON GLIDES AT BASE

FINISHED FLOOR

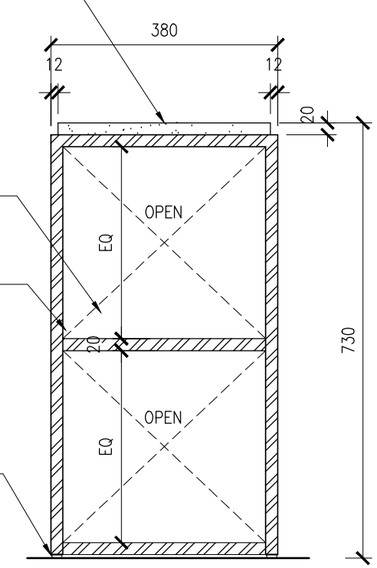

4 D3.10.0 ELEVATION
SCALE 1:10

Notes:

1. CONTRACTOR AND ALL SUB-TRADES SHALL VERIFY ALL SITE DIMENSIONS, ALL DRAWINGS, DETAILS AND SPECIFICATIONS AND REPORT ANY DISCREPANCIES TO THE INTERIOR DESIGNERS IN WRITING FOR APPROVAL BEFORE PROCEEDING WITH THE WORK.

2. CONTRACTOR AND SUB-CONTRACTORS, BEFORE PROCEEDING WITH WORK, MUST SUBMIT ALL NECESSARY SAMPLES FOR APPROVAL OF QUALITY AND FINISH TO THE INTERIOR DESIGNER.

3. CONTRACTOR MUST COMPLY WITH THE CONTRACT DOCUMENTS, PERFORMANCE REQUIREMENTS, APPLICABLE CODES AND REGULATIONS.

4. ALL DRAWINGS AND WRITTEN MATERIAL HEREIN CONSTITUTES THE ORIGINAL AND UNPUBLISHED WORK OF " II BY IV DESIGN ASSOCIATES INC. " , AND MAY NOT BE DUPLICATED, USED OR DISCLOSED WITHOUT PRIOR WRITTEN CONSENT OF " II BY IV DESIGN ASSOCIATES INC. "

5. DRAWINGS NOT TO BE SCALED

Issue:

11 SITE INSTRUCTION #01	17.07.18
-	-
-	-
-	-
-	-
-	-
-	-
-	-
-	-
-	-
-	-
-	-

Hines TRIDEL

AQUAVISTA AT BAYSIDE TORONTO

255 QUEEN'S QUAY EAST, TORONTO ONTARIO

77 MOWAT AVENUE, SUITE 109
TORONTO, ONTARIO M6K 3E3 – CANADA
T + 1 416 531 2224

12 DESBROSSES STREET
NEW YORK, NEW YORK 10013 – USA
T + 1 212 392 4952

II BY IV DESIGN

Drawing Title:

L2 LOUNGE AREA CONSOLE TABLE (F.35)

Our Project Number:
14008

Designed By: DM,KR, XX
Detailed By: DM,KR, XX,XX

Drawing Number:

D3.10.0