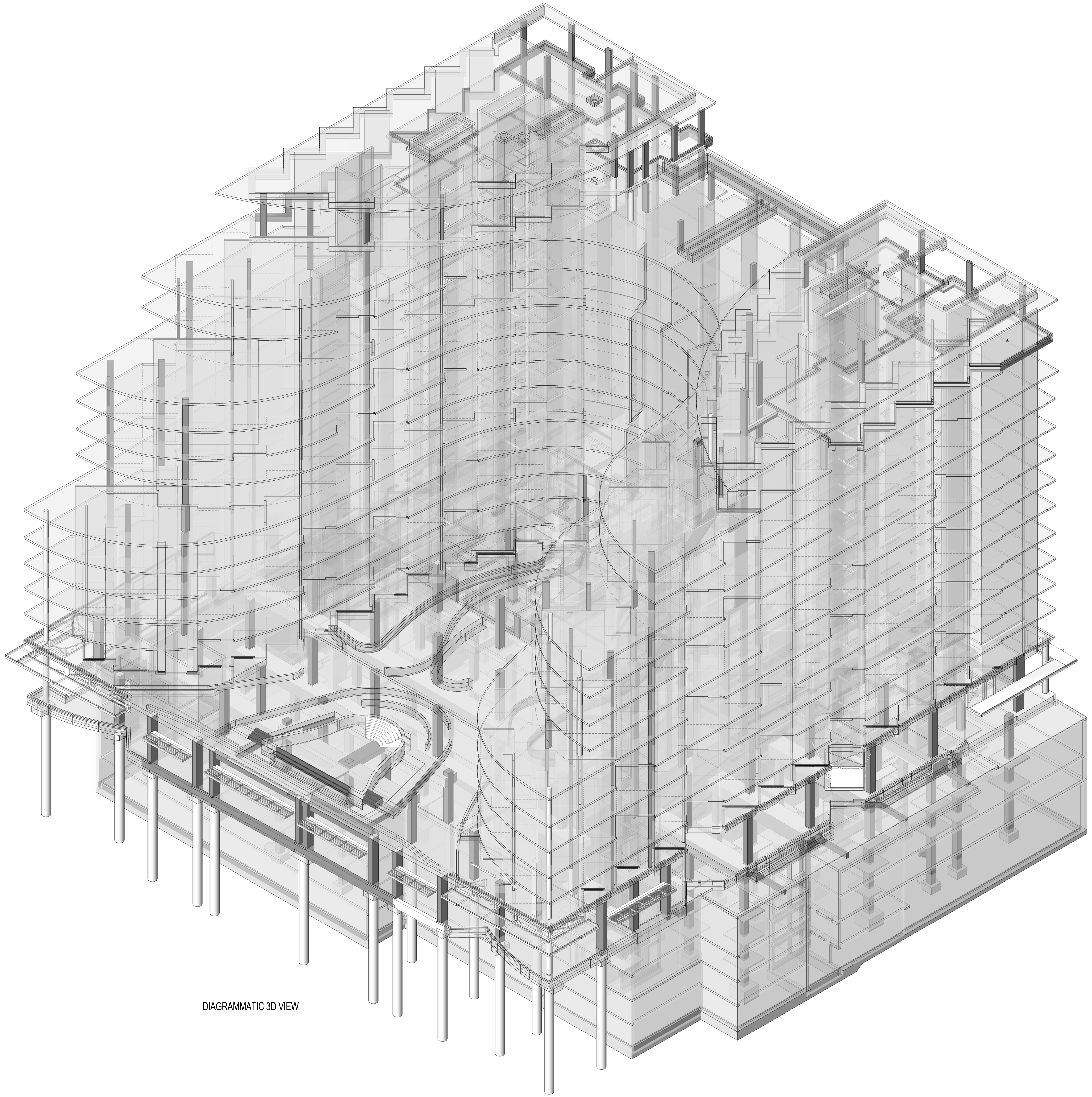

DIAGRAMMATIC 3D VIEW

DRAWING LIST

Sheet Number	Sheet Name
S0 SERIES - COVER SHEET	
S0-01	COVER SHEET
S1 SERIES - PLANS	
S1-01	FOUNDATION PLAN
S1-02	LEVEL P3 FLOOR FRAMING PLAN
S1-03	LEVEL P2 FLOOR FRAMING PLAN
S1-04	LEVEL P1 FLOOR FRAMING PLAN
S1-05	LEVEL P1 MEZZANINE FRAMING PLAN
S1-06	LEVEL 1-GROUND FLOOR FRAMING PLAN - WITH TOP REINFORCEMENT AND DETAILS
S1-07	LEVEL 1-GROUND FLOOR FRAMING PLAN - WITH BOTTOM REINFORCEMENT AND SCHEDULES
S1-08	LEVEL L1 MEZZANINE FRAMING PLAN
S1-09	LEVEL 2 FLOOR FRAMING PLAN
S1-10	LEVEL 3 FLOOR FRAMING PLAN
S1-11	LEVEL 4 FLOOR FRAMING PLAN
S1-12	LEVEL 5 FLOOR FRAMING PLAN
S1-13	LEVEL 6 FLOOR FRAMING PLAN
S1-14	LEVEL 7 FLOOR FRAMING PLAN
S1-15	LEVEL 8 FLOOR FRAMING PLAN
S1-16	LEVEL 9 FLOOR FRAMING PLAN
S1-17	LEVEL 10 FLOOR FRAMING PLAN
S1-18	LEVEL 11 FLOOR FRAMING PLAN
S1-19	LEVEL 12 / PH1 FLOOR FRAMING PLAN
S1-20	LEVEL 13/PH2/ MECH. FLOOR FRAMING PLAN
S1-21	ROOF FRAMING PLANS
S1-22	WIND UPLIFT PLAN
S2 SERIES - SCHEDULES	
S2-01	COLUMN SCHEDULES - LEVEL 2 AND BELOW
S2-02	COLUMN SCHEDULE - LEVEL 2 ABOVE AND CONNECTION PLATE SCHEDULE
S2-03	BEAM SCHEDULES
S3 SERIES - WALL ELEVATIONS	
S3-01	WALL ELEVATIONS AND NOTES
S3-02	WALL ELEVATIONS
S3-03	WALL ELEVATIONS
S3-04	WALL ELEVATIONS
S3-05	WALL ELEVATIONS
S3-06	WALL ELEVATIONS
S3-07	WALL ELEVATIONS
S3-08	WALL ELEVATIONS
S3-09	WALL ELEVATIONS
S3-10	WALL ELEVATIONS
S4 SERIES - FOUNDATION ELEVATION AND SECTIONS	
S4-01	FOUNDATION ELEVATIONS
S4-02	FOUNDATION SECTIONS
S4-03	FOUNDATION SECTIONS
S4-04	FOUNDATION SECTIONS
S5 SERIES - PODIUM FLOOR SECTIONS	
S5-01	PODIUM FLOOR SECTIONS
S6 SERIES - FLOOR SECTIONS	
S6-01	FLOOR SECTIONS
S7 SERIES - ROOF SECTIONS	
S7-01	ROOF SECTIONS
S8 SERIES - TYPICAL NOTES & DETAILS	
S8-01	GENERAL NOTES & TYPICAL DETAILS
S8-02	TYPICAL DETAILS

Contractor Must Check And Verify All Dimensions On The Job.

Do Not Scale The Drawings.

All Drawings, Specifications And Related Documents Are The Copyright Of The Architect And Must Be Returned Upon Request.

Reproduction Of Drawings, Specifications And Related Documents In Part Or Whole Is Forbidden Without The Architects Written Permission.

This Drawing Is Not To Be Used For Construction Until Signed ByThe Architect.

Date:

DEC.18,2015 DEC.18,2015

stephenson ENGINEERING
2550 Victoria Park Ave. Suite 602
Toronto ON M2J 5A9 | Tel: (416) 635 9970
www.stephenson-eng.com | info@stephenson-eng.com

No	Revision	Date

No	Issued For	Date
7	ISSUED FOR STEEL TENDER	DEC.18,2015
4	BUILDING PERMIT RESUBMISSION	SEPT.21,2015
3	BUILDING PERMIT RESUBMISSION	JULY 22,2015
2	BUILDING PERMIT SUBMISSION	JUNE 12,2015
1	ISSUED FOR WT REVIEW	MAY 01,2015

AQUAVISTA
AT BAYSIDE TORONTO

Drawing Title
COVER SHEET

Project
Hines TRIDEL®
AQUAVISTA
Block 3 - R3 & R4
Merchant's Whart
Toronto, ON

Scale

Drawn by
DC

Checked by
BBS

Project No.
20140031

Date
DEC.18,2015

Drawing No.
S0-01

Plot Date: 3/9/2016 9:58:23 AM

DESIGN CRITERIA NOTES

1. GENERAL
    1.1. THE PROJECT HAS BEEN DESIGNED IN ACCORDANCE WITH THE REQUIREMENTS OF THE 2012 OBC (O. REG. 332/12 AS AMENDED) INCLUDING CLAUSES 4.1.6.1(1), 4.1.6.4(3), 4.1.7 AND 4.1.8
    1.2. THE PARKING GARAGE HAS BEEN DESIGNED IN ACCORDANCE TO THE STRUCTURAL REQUIREMENTS OF CSA-S413-07 PARKING STRUCTURES. SEE ARCHITECTURAL DRAWINGS FOR WATERPROOFING, SEALERS, ETC... DETAILED IN ACCORDANCE WITH CSA-S413-07. SEE ALSO MECHANICAL DRAWINGS FOR COMPLIANCE WITH THE MECHANICAL REQUIREMENTS OF CSA-S413-07.
    1.3. THE AREAS OF THE STRUCTURE ACCESSIBLE TO VEHICULAR TRAFFIC HAVE BEEN DESIGNED FOR CLAUSES 4.1.5.5, 4.1.5.10, APPENDIX A OF THE OBC AND WHERE APPLICABLE GARAGE ROOF SLABS HAVE BEEN DESIGNED FOR THE REQUIREMENTS OF THE CITY OF TORONTO GUIDELINES FOR GARBAGE TRUCK AND FIRE TRUCK WHEEL LOADING.
    1.4. ALL REINFORCED CONCRETE SLABS, BEAMS, COLUMNS, AND SHEAR WALLS HAVE BEEN DESIGNED TO ACHIEVE A MINIMUM 2 HOUR FIRE RESISTANCE RATING.
    1.5. MISCELLANEOUS METAL, PRECAST AND STAIR FABRICATORS SHALL:
        1.5.1. PROVIDE SHOP DRAWINGS TO THE ARCHITECT PRIOR TO FABRICATION; STAMPED, SIGNED AND DATED BY A PROFESSIONAL ENGINEER.
        1.5.2. DESIGN ALL GUARDS TO MEET LATERAL LOADS DESCRIBED IN OBC 4.1.5.15.
        1.5.3. DESIGN ALL HANDRAILS TO MEET LOADS DESCRIBED IN OBC 3.4.6.4(9).
        1.5.4. DESIGN ALL STAIRS TO SUPPORT A MINIMUM LIVE LOAD OF 4.8kPa.
    1.6. ARCHITECTURAL PRECAST FABRICATOR SHALL:
        1.6.1. PROVIDE SHOP DRAWINGS TO THE ARCHITECT PRIOR TO FABRICATION, STAMPED, SIGNED AND DATED BY A PROFESSIONAL ENGINEER.
        1.6.2. WHERE PRECAST IS USED AS A GUARD DESIGN THE PRECAST AND CONNECTIONS TO MEET LATERAL LOADS DESCRIBED IN OBC 4.1.5.15.
    1.7. IT IS THE RESPONSIBILITY OF THE CONTRACTOR WHO IS SUPPLYING AND INSTALLING EQUIPMENT, THAT ALL ELEMENTS OF STRUCTURES LISTED IN TABLE 4.1.8.17 OF THE OBC 2012 ARE DESIGNED IN ACCORDANCE WITH CLAUSE 4.1.8.17.
    1.8. BUILDING IMPORTANCE CATEGORY (SNOW, WIND, AND EARTHQUAKE) IS NORMAL (Ie=1.0)
    1.9. STIFF ELEMENTS NOT PART OF SFRS SHALL BE SEPARATED FROM THE STRUCTURE AS PER OBC CLAUSE 4.1.8.3 (6a). EXAMPLES INCLUDE, BUT NOT LIMITED TO MASONRY PARTITIONS, BRICK VENEER, PRECAST CLADDING ETC. IT IS THE RESPONSIBILITY OF THE SUBCONTRACTOR TO PROVIDE SHOP DRAWINGS, STAMPED, SIGNED AND DATED BY A PROFESSIONAL ENGINEER DEMONSTRATING COMPLIANCE. PROVIDE MINIMUM 15mm SEPARATION UNLESS NOTED OTHERWISE ON DRAWINGS AND SPECIFICATION.

2. LATERAL LOADS ON STRUCTURE
    2.1. WIND
        q(1/50) = 0.44 kPa
        Ce = (h/10)^0.28 NOT LESS THAN 1.0 AND NOT GREATER THAN 2.5(DYNAMIC APPROACH).
        Cg = 1.8
        Cp = AS PER FIGURE I-15 OF USER'S GUIDE - NBC 2005 STRUCTURAL COMMENTARIES (PART 4 OF DIVISION B).
    2.2. EARTHQUAKE

Sa(0.2) = 0.22	PGA = 0.12	Fa = 1.0
Sa(0.5) = 0.13	SITE CLASS =C	Fv = 1.0
Sa(1.0) = 0.067	Rd = 1.5	Ie = 1.0
Sa(2.0) = 0.021	Ro = 1.3	

SFRS CONSISTS OF CONCRETE SHEAR WALLS.
STRUCTURAL IRREGULARITIES CONSIDERED IN THE DESIGN PER CLAUSE 4.1.8.6. CONSIST OF:
TYPES 1, 2, 3, 4, 5,8
METHOD OF ANALYSIS :- DYNAMIC

3. FOUNDATION WALLS
    3.1. WALLS RETAINING EARTH ARE DESIGNED TO SAFELY WITHSTAND HORIZONTAL EARTH AND HYDROSTATIC PRESSURE (P=K (Yh1+Y'h2+q)+Ywh2),
        WHERE
        K= 0.40
        Wt = 22kN/m³
        q = 12kPa (LIVE LOAD SURCHARGE)
        h1 = DEPTH TO GROUND WATER TABE, IN METRES
        h2 = DEPTH BELOW GROUND WATER TABLE, IN METRES
        Y = 22 kN/m³ (SOIL UNIT WEIGHT)
        Y' = 12 kN/m³ (SUBMERGED SOIL UNIT WEIGHT)
        Yw = 10kN/m³ (WATER UNIT HEIGHT)

	STRENGTH AT 28 DAYS (Mpa)	SLUMP AT DELIVERY (mm)	AIR ENTRAINMENT	MAXIMUM W/C RATIO	EXPOSURE CLASSIFICATION
GENERAL (NON-EXPOSED) CONCRETE INTERIOR SLABS, WALLS, COLUMNS, BEAMS AND FOUNDATIONS (SEE PLAN & SCHEDULE FOR STRENGTH)	25 30 35 40 45	80 ± 20	- - - -	TO SUIT	N
EXTERIOR (EXPOSED) CONCRETE WALLS AND OR COLUMNS, EXCEPT PARKING STRUCTURE	25 30 35 40 45	80 ± 20	4 - 7 %	0.55	F - 2
(1) GENERAL INTERIOR SLAB - ON - GRADE	25	80 ± 20	- - - -	TO SUIT	N
EXTERIOR SLABS-ON-GRADE. SIDEWALKS, CURBS AND GUTTERS (UNREINFORCED)	32	80 ± 20	5 - 8 %	0.45	C - 2
(2) PARKING STRUCTURE. (SLAB, COLUMNS, BEAMS WALLS GRADE BEAMS/CAPS AND FOOTINGS)	35 40 45	80 ± 20	5 - 8 %	0.40	C - 1
(2) EXTERIOR GARAGE ROOF (PROVIDE DCI AT A DOSAGE OF 10L/m³)	35	80 ± 20	5 - 8 %	0.40	C - 1
(1) PARKING SLABS-ON-GRADE	32	80 ± 20	5 - 8 %	0.45	C - 2
NON WATER PROOFED EXPOSED BALCONY SLAB, POOL	30	80 ± 20	5 - 8 %	0.50	F - 1
LEAN MIX CONCRETE	15	80 ± 20	- - - -	TO SUIT	N

1) REINFORCED WITH SYNTHETIC FIBRES ADDED AT BATCHING PLANT - SEE SPECIFICATION.

2) CHLORIDE ION PENETRABILITY REQUIREMENTS < 1500 COULOMBS WITHIN 56 DAYS.

CAISSON SCHEDULE

CAISSON NUMBER	CAISSON DIA.	UPPER SHAFT		REMAINING STIRRUPS	EMBEDMENT INTO SOUND BEDROCK, m	CONCRETE STRENGTH	LOAD ULS kN
		REINFORCEMENT	STIRRUPS ZONE				
C1	915Ø	11-20 V + 10@150 TIES	2750	10@300	2.0	25MPa	3700
C2	915Ø	16-25 V + 10@150 TIES	2750	10@200	3.0	25MPa	5500

FOOTING SCHEDULE

FOOTING NUMBER	FOOTING NUMBER AND SIZE	FOOTING REINF. LG. (HOOKED EE)	FOOTING REINF. TR. (HOOKED EE)	LOAD ULS KN
F1	1000x1100x500 DP.	10-20B	11-20B	4400
F1a	1000x1050x800 DP.	10-20B	11-20B	4400
F2	1300x1400x800 DP.	13-20B	14-20B	7300
F3	1600x1700x1100 DP.	12-25B	13-25B	10900
F4	1900x2100x1400 DP.	19-25B	21-25B	16000
F5	900x1300x650 DP.	9-20B	13-20B	4700

CAISSON CAP SCHEDULE

CAP #	CAP SIZE	REINF. HOOKED EE	CONCRETE STRENGTH
CP1	1300x1300x600 DP	6-20 BEW	25 MPa
CP2	1300WIDTHx600DP, LENGTH TO SUIT	6-20 BEW	25 MPa
CP3	2315WIDTHx600DP, LENGTH TO SUIT	6-20 T&B LG. 9-20 T&B TR.	25 MPa

FOUNDATION PLAN NOTES:

1. TOP OF SLAB VARIES IN PARKING LEVEL AND IS TO BE SLOPED TO SUIT DRAINAGE AS SHOWN ON THE ARCHITECTURAL DRAWINGS.
2. SLAB-ON-GRADE TO BE 100 mm THICK WITH SAW CUTS @3000 o/c EACH WAY, SEE SPECIFICATIONS.
3. PROVIDE SLAB DEPRESSIONS, OTHER THAN THOSE SHOWN ON STRUCTURAL DRAWINGS, AS REQUIRED BY ARCHITECTURAL AND MECHANICAL DRAWINGS AND SPECIFICATIONS.
4. SLAB-ON-GRADE TO BE PLACED ON A 200 mm MINIMUM LAYER OF COMPACTED 19mm MAXIMUM SIZE CLEAR CRUSHED STONE.
5. FOOTINGS SHALL BE CARRIED DOWN TO SOUND BEDROCK WITH A FACTORED GEOTECHNICAL RESISTANCE (ØULS) OF 5000 kPa.
   ALL SPREAD AND STRIP FOOTINGS TO BE CAST AGAINST SIDES OF EXCAVATION.
6. FRICTION CAISSONS HAVE BEEN DESIGNED FOR ULS BEND STRENGTH OF 700kPa BETWEEN CONCRETE AND SOUND SHALE.
7. BEDROCK OF THIS VALUE IS ASSUMED TO BE FOUND AT THE ELEVATIONS SHOWN, ANY VARIATIONS MUST BE REPORTED TO THE ENGINEER BEFORE PROCEEDING WITH THE WORK.
8. REFER TO SOIL REPORT BRM-00017976-J0 DATED APRIL 24, 2015 PREPARED BY EXP. AND MEMORANDUM DATED APRIL 24,2015.
9. BEDROCK AT THE UNDERSIDE OF ALL FOOTINGS IS TO BE INSPECTED AND APPROVED BY A REPRESENTATIVE OF THE SOILS CONSULTANT BEFORE PLACING CONCRETE. A 50mm LEAN MIX CONCRETE SKIM SLAB IS TO BE PLACED ON BEDROCK IMMEDIATELY AFTER EXCAVATION AND INSPECTION IS COMPLETED.
10. TOP OF FOOTINGS TO BE AT ELEVATIONS AS NOTED ON PLAN (TOF =).
11. SDF = STEP DOWN FOOTING. STEPS IN ANY FOOTING SHALL BE 600mm MAX. AND 10 HORIZ. TO 7 VERT.
12. UNLESS OTHERWISE NOTED, ALL WALL FOOTINGS TO BE 350 mm DEEP WITH 150 mm PROJECTION EACH SIDE. SEE SECTION FS22/S4-04 FOR REINFORCEMENT.
    ALL PERIMETER FOUNDATION WALL FOOTINGS TO BE WITH 150 mm PROJECTION.
    PROTECT FOOTING BASE BY 50mm CONCRETE IF CONCRETE PLACEMENT NOT OCCUR ON THE SAME DAY.
13. DO NOT PLACE BACKFILL AGAINST WALLS RETAINING EARTH UNTIL FLOORS AT TOP AND BOTTOM OF WALLS ARE PLACED AND HAVE ATTAINED SPECIFIED DESIGN STRENGTH U/N.
14. FILL REQUIRED ON BOTH SIDES OF FOUNDATION WALLS SHALL BE PLACED AND COMPACTED SIMULTANEOUSLY ON BOTH SIDES TO EQUALIZE SOIL PRESSURE.
15. CO-ORDINATE ALL DIMENSIONS WITH THE ARCHITECTURAL DRAWINGS AND REPORT ANY DISCREPANCIES TO THE ENGINEER AND ARCHITECT PRIOR TO PROCEEDING WITH ANY WORK.
16. CENTRE LINES OF COLUMNS, WALLS, CAPS, CAISSONS AND FOOTINGS ARE COINCIDENT UNLESS OTHERWISE SHOWN. (SEE ARCHITECTURAL)
17. CONCRETE FOR FOUNDATION WALLS AND ALL FOOTINGS SHALL BE CLASS C-1 WITH A MINIMUM CONCRETE STRENGTH AT 28 DAYS OF 35 MPa U/N.
18. ALL CONCRETE WALLS POURED MONOLITHICALLY WITH COLUMNS AND/OR SHEAR WALLS SHALL HAVE THE SAME CONCRETE STRENGTH AS INDICATED FOR THE COLUMNS AND/OR SHEAR WALLS WHICHEVER IS HIGHER.
19. THE FORMING CONTRACTOR IS TO SUBMIT FOR REVIEW PROPOSED SLAB-ON-GRADE SAWCUT LAYOUT SEE TYPICAL DETAILS.
20. THE PROJECT SUPERINTENDENT MUST CONTACT THIS OFFICE 24 HOURS PRIOR TO POURING STRUCTURAL CONCRETE.
21. SEE COLUMN SCHEDULES AND SHEAR WALL ELEVATIONS.
22. SEE ALSO GENERAL NOTES AND TYPICAL DETAILS.
23. SEE TYPICAL CONCRETE MIX CHART DRAWING S1-01.
24. SEE MECHANICAL AND ARCHITECTURAL DRAWINGS FOR UNDER SLAB-ON-GRADE WEEPING TILE SYSTEM.
25. PROVIDE DCI AT A DOSAGE OF 10L/m³ CONCRETE IN THE FRAMED RAMP SLAB AND ALL TURNING AREAS.
26. C - ON PLAN DENOTES CAISSON. SEE SCHEDULE ON THIS DRAWING.
27. CP - ON PLAN DENOTES CAISSON CAP. SEE SCHEDULE ON THIS DRAWING.
28. REFER TO SOIL REPORT RECOMMENDATIONS REGARDING RELIEF WELLS, BOND STRENGTH FOR CAISSONS.

SITE PREPARATION NOTES FOR SLAB-ON-GRADE (WITHIN BUILDING ENVELOPE)

1. THE AREA WITHIN THE BUILDING SHALL BE STRIPPED OF THE UPPER LAYER SOIL, FILL, ORGANICALLY CONTAMINATED MATERIAL AND RUBBLE AND TO A MINIMUM OF 200mm (8") BELOW THE UNDERSIDE OF THE SLAB ON GRADE.
2. THE EXPOSED SUB-GRADE SHALL BE EXAMINED AND APPROVED BY THE SOIL CONSULTANT.
3. THE ENTIRE AREA SHALL BE PROOF ROLLED WITH A HEAVY COMPACTOR TO A MINIMUM OF 95% STANDARD PROCTOR MAX. DRY DENSITY AND TO THE APPROVAL OF THE SOIL CONSULTANT.
4. ANY LOOSE OR SOFT SPOTS ENCOUNTERED SHALL BE SUB-EXCAVATED AND BACKFILLED WITH COMPACTED APPROVED MATERIAL.
5. FILL REQUIRED TO RAISE THE GRADES SHALL BE COMPRISED OF APPROVED GRANULAR 'B' TYPE 1 CONFORMING TO OPSS 1010 PLACED IN SUCCESSIVE LOOSE 200mm(8") LAYERS EACH COMPACTED TO AT LEAST 95% OF ITS STANDARD PROCTOR MAXIMUM DRY DENSITY.
6. THE LAYER IMMEDIATELY BELOW THE SLAB-ON-GRADE SHALL BE 200mm (8") OF GRANULAR 'A' COMPACTED TO MIN. 98% STANDARD PROCTOR MAX. DRY DENSITY.
7. ALL PROCEDURES, EQUIPMENT AND MATERIALS SHALL BE APPROVED BY THE SOIL CONSULTANT WHO SHALL CONDUCT SUFFICIENT TESTS TO ENSURE THAT THE SPECIFIED MATERIALS AND DENSITIES ARE ACHIEVED.
8. THE CONTRACTOR SHALL CO-ORDINATE WITH THE SOIL CONSULTANT AND ARRANGE A SUITABLE PROGRAM FOR SAMPLING AND INSPECTIONS, ETC. AND NOTIFY THE ARCHITECT ACCORDINGLY.
9. EXISTING ON-SITE MATERIAL SHALL NOT BE USED WITHIN THE BUILDING AREA FOR BACKFILLING IN TRENCHES AGAINST FOUNDATION WALLS OR UNDER SLABS-ON-GRADE.
10. REFER TO THE SPECIFICATION AND THE SOIL REPORT FOR PREPARATION OF AREAS OUTSIDE THE BUILDING ENVELOPE.

LEGEND

⬚	WALLS AND COLUMN SHADED AS THUS INDICATE WALL AND COLUMN BELOW SLAB
▨	WALLS AND COLUMN SHADED AS THUS INDICATE WALL AND COLUMN ABOVE SLAB
⯃ -	- INDICATES COLUMN NUMBER OF BELOW SLAB. REFER TO COLUMN SCHEDULE
⯃ -	- INDICATES COLUMN NUMBER OF ABOVE SLAB. REFER TO COLUMN SCHEDULE

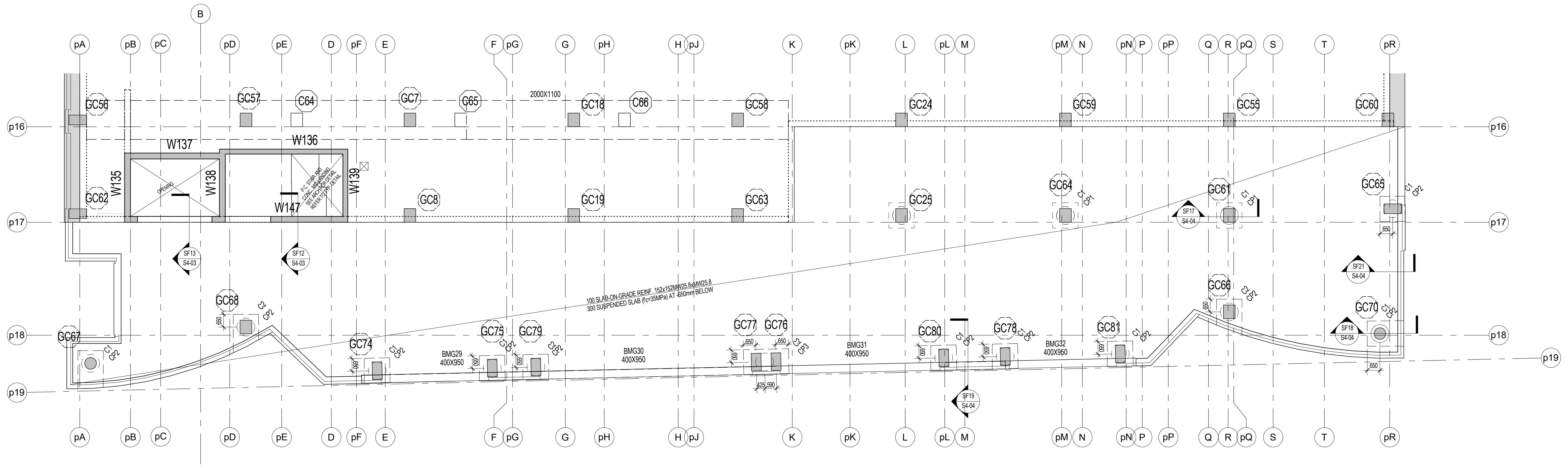

pA
pB
pC
pD
pE
D
pF
E
F
pG
G
pH
H
pJ
K
pK
L
pL
M
pM
N
pN
P
pP
Q
R
pQ
S
T
pR
B
p16
p17
p18
p19
W137
W136
W135
W138
W147
W139
GC56
GC57
C64
GC7
C65
GC18
C66
GC58
GC24
GC59
GC55
GC60
GC62
GC8
GC19
GC63
GC25
GC64
GC61
GC65
GC68
GC66
GC70
GC67
GC74
GC75
GC79
GC77
GC76
GC80
GC78
GC81
BM329
BM330
BM331
BM332

FOUNDATION PLAN AT GROUND LEVEL

1 : 100

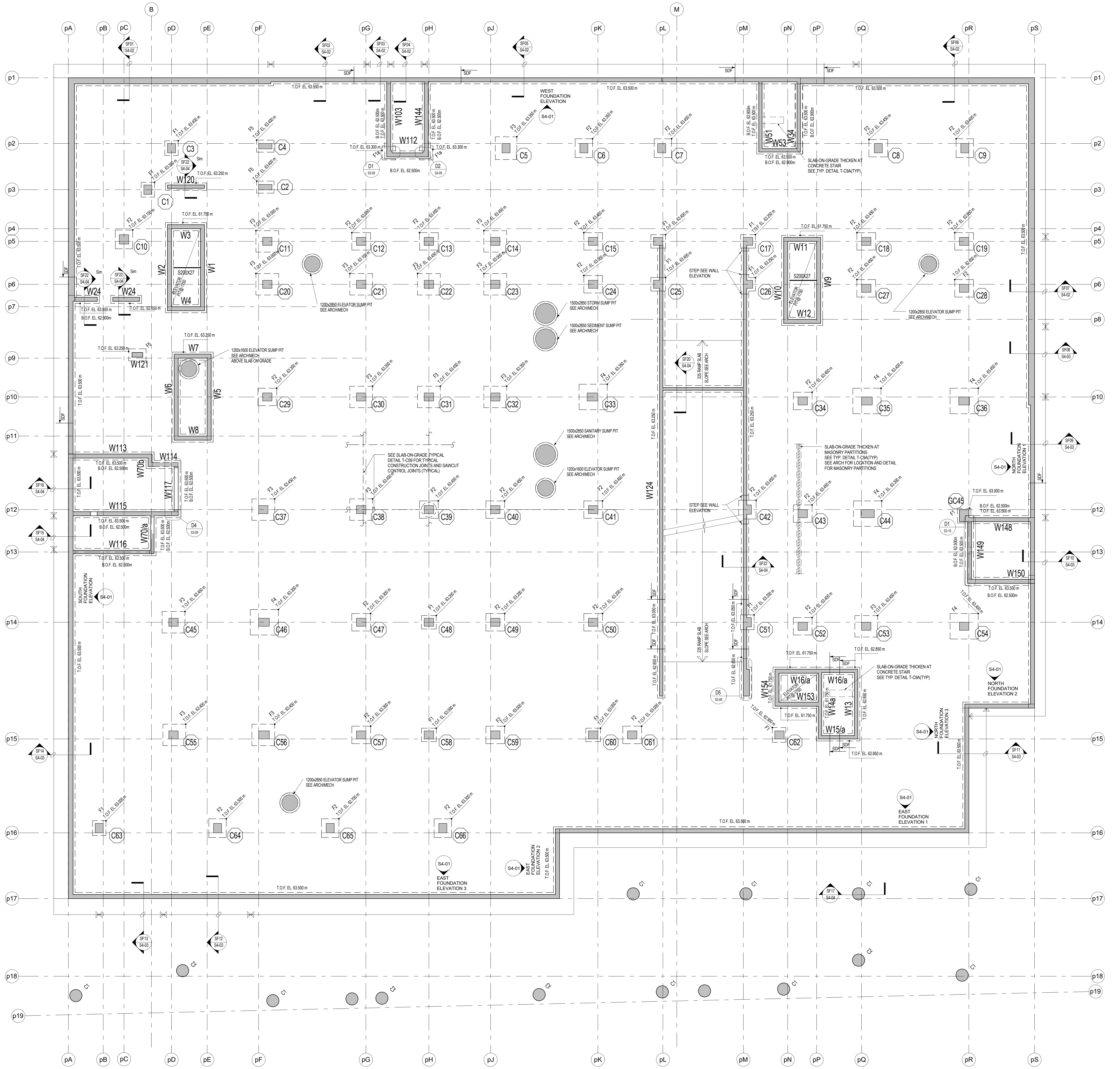

pA
pB
pC
pD
pE
pF
pG
pH
pJ
pK
pL
pM
pN
pP
pQ
pR
pS
B
M
p1
p2
p3
p4
p5
p6
p7
p8
p9
p10
p11
p12
p13
p14
p15
p16
p17
p18
p19
W103
W144
W112
W53
W54
W51
W120
W3
W2
W1
W4
W24
W24
W7
W121
W6
W5
W8
W11
W9
W10
W12
W113
W114
W70b
W117
W115
W116
W70a
W124
W148
W149
W150
W16/a
W153
W154
W14a
W13
W15/a
C1
C2
C3
C4
C5
C6
C7
C8
C9
C10
C11
C12
C13
C14
C15
C16
C17
C18
C19
C20
C21
C22
C23
C24
C25
C26
C27
C28
C29
C30
C31
C32
C33
C34
C35
C36
C37
C38
C39
C40
C41
C42
C43
C44
C45
C46
C47
C48
C49
C50
C51
C52
C53
C54
C55
C56
C57
C58
C59
C60
C61
C62
C63
C64
C65
C66
WEST FOUNDATION ELEVATION
NORTH FOUNDATION ELEVATION 1
NORTH FOUNDATION ELEVATION 2
NORTH FOUNDATION ELEVATION 3
SOUTH FOUNDATION ELEVATION
EAST FOUNDATION ELEVATION 1
EAST FOUNDATION ELEVATION 2
EAST FOUNDATION ELEVATION 3
1200x2850 ELEVATOR SUMP PIT SEE ARCH/MECH
1900x2850 STORM SUMP PIT SEE ARCH/MECH
1900x2850 SEDIMENT SUMP PIT SEE ARCH/MECH
1200x1600 ELEVATOR SUMP PIT SEE ARCH/MECH ABOVE SLAB ON GRADE
1500x2850 SANITARY SUMP PIT SEE ARCH/MECH
1200x1600 ELEVATOR SUMP PIT SEE ARCH/MECH
1200x2850 ELEVATOR SUMP PIT SEE ARCH/MECH
SLAB-ON-GRADE THICKEN AT CONCRETE STAIR SEE TYP. DETAIL T-C3A(TYP)
SLAB-ON-GRADE THICKEN AT MASONRY PARTITIONS SEE TYP. DETAIL T-CM(TYP) SEE ARCH FOR LOCATION AND DETAIL FOR MASONRY PARTITIONS
SEE SLAB-ON-GRADE TYPICAL DETAIL T-C30 FOR TYPICAL CONSTRUCTION JOINTS AND SAWCUT CONTROL JOINTS (TYPICAL)
STEP SEE WALL ELEVATION
SDF

FOUNDATION PLAN

1 : 100

Contractor Must Check And Verify All Dimensions On The Job.

Do Not Scale The Drawings.

All Drawings, Specifications And Related Documents Are The Copyright Of The Architect And Must Be Returned Upon Request.

Reproduction Of Drawings, Specifications And Related Documents In Part Or Whole Is Forbidden Without The Architects Written Permission.

This Drawing Is Not To Be Used For Construction Until Signed ByThe Architect.

Date:

DEC.18,2015 DEC.18,2015

stephenson ENGINEERING
2550 Victoria Park Ave. Suite 602
Toronto ON M2J 5A9 | Tel: (416) 635 9970
www.stephenson-eng.com | info@stephenson-eng.com

No	Revision	Date

No	Issued For	Date
7	ISSUED FOR STEEL TENDER	DEC.18,2015
6	ISSUED FOR CAISSONS CONSTRUCTION ONLY	NOV.30,2015
4	BUILDING PERMIT RESUBMISSION	SEPT.21,2015
3	BUILDING PERMIT RESUBMISSION	JULY 22,2015
2	BUILDING PERMIT SUBMISSION	JUNE 12,2015
1	ISSUED FOR WT REVIEW	MAY 01,2015

AQUAVISTA
AT BAYSIDE TORONTO

Drawing Title
FOUNDATION PLAN

Project
Hines TRIDEL®
AQUAVISTA
Block 3 - R3 & R4
Merchant's Whart
Toronto, ON

Scale
As indicated
Drawn by
DC
Checked by
BBS
Project No.
20140031
Date
DEC.18,2015
Drawing No.
S1-01

Plot Date: 3/9/2016 9:58:27 AM

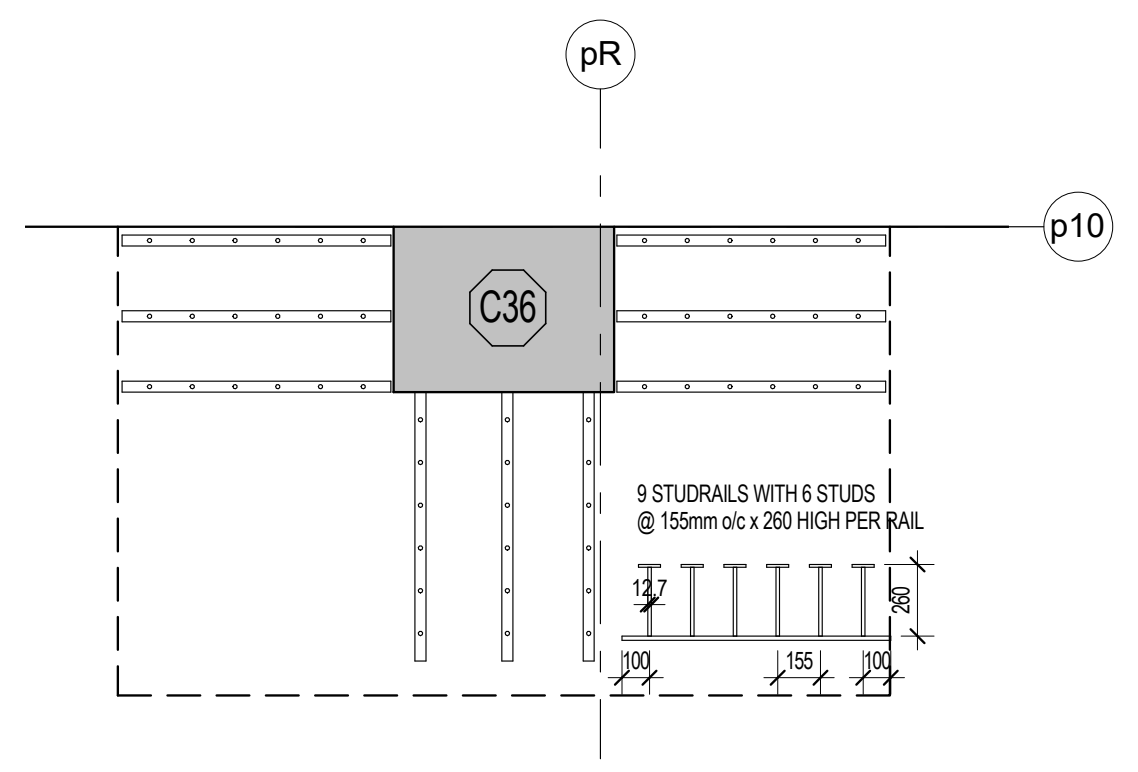
pR
p10
C36
9 STUDRAILS WITH 6 STUDS @ 155mm o/c x 260 HIGH PER RAIL
12.7
260
100
155
100

D2 PLAN DETAIL
S1-02
1 : 25

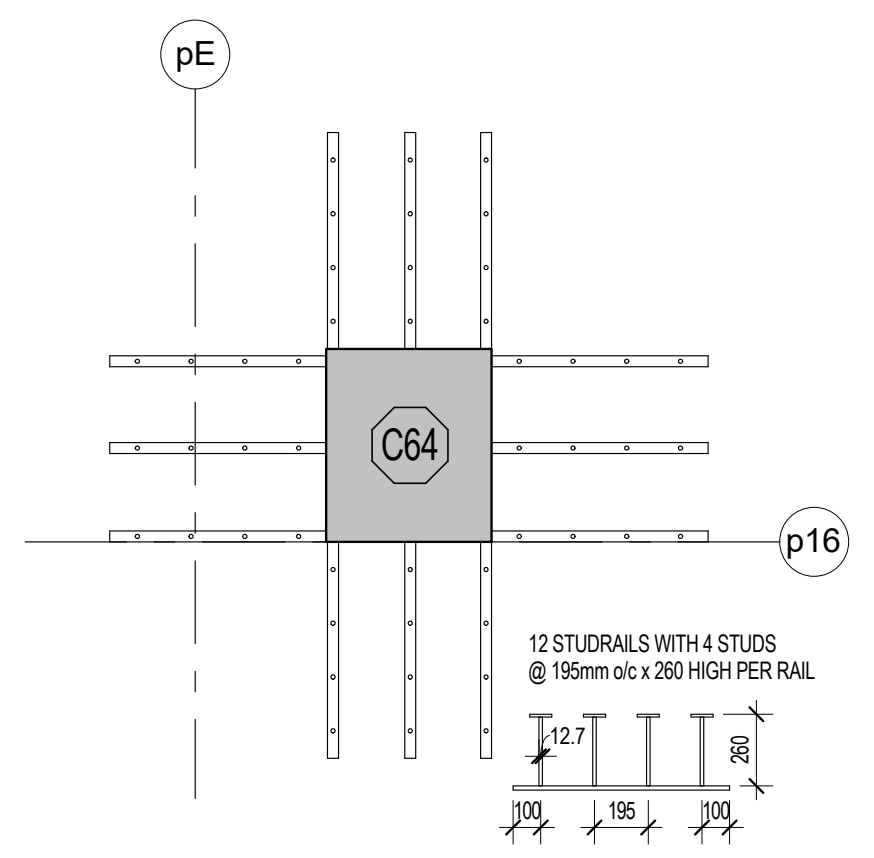
pE
C64
p16
12 STUDRAILS WITH 4 STUDS @ 195mm o/c x 260 HIGH PER RAIL
12.7
260
100
195
100

D3 PLAN DETAIL
S1-02
1 : 25

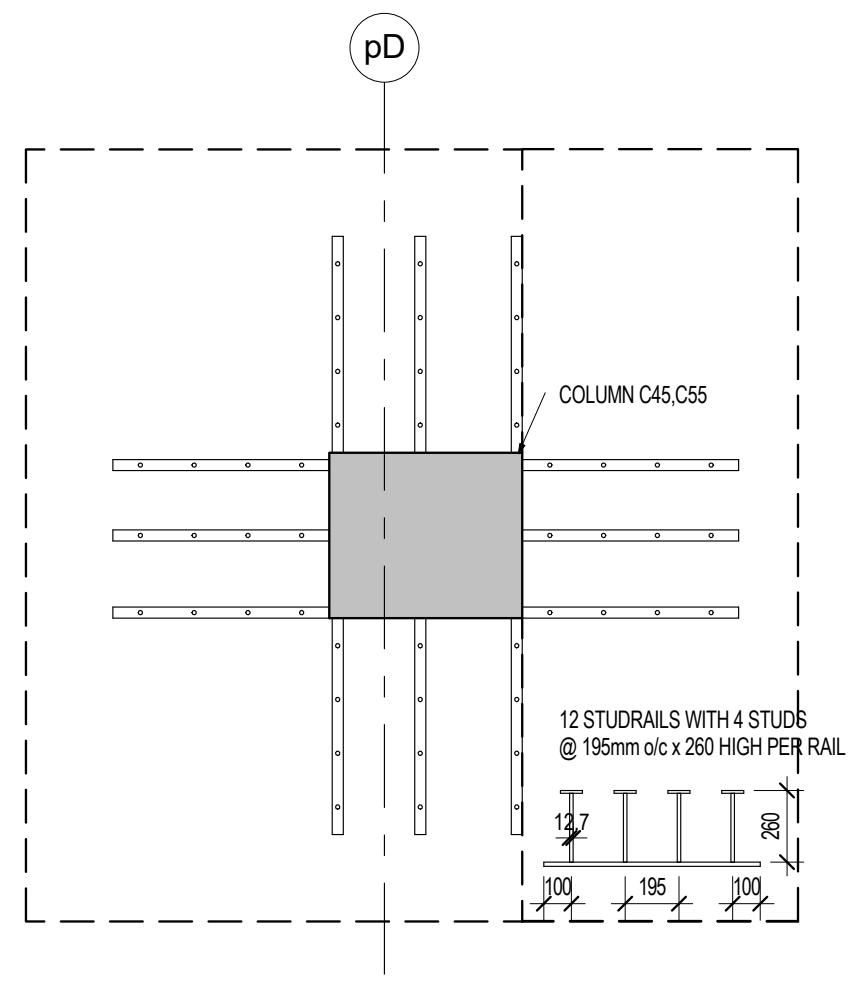
pD
COLUMN C45,C55
12 STUDRAILS WITH 4 STUDS @ 195mm o/c x 260 HIGH PER RAIL
12.7
260
100
195
100

D4 PLAN DETAIL
S1-02
1 : 25

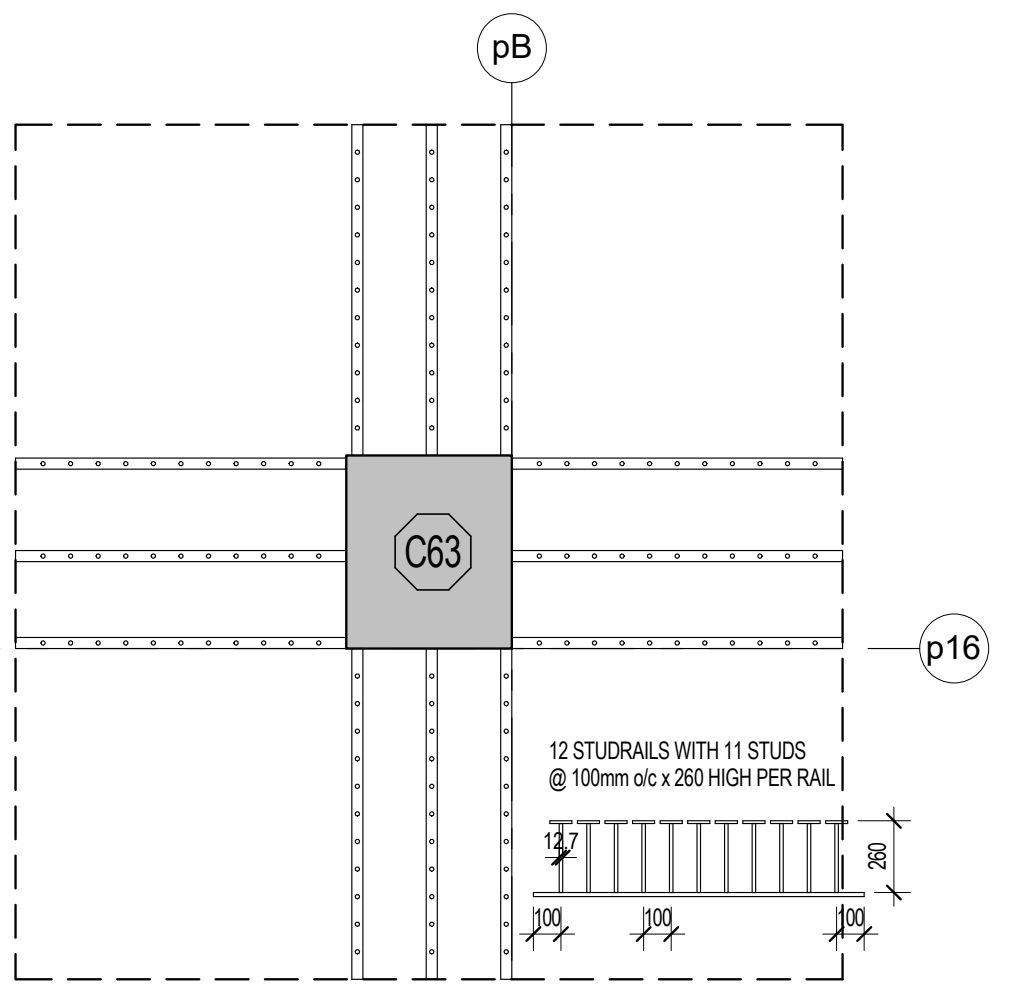
pB
C63
p16
12 STUDRAILS WITH 11 STUDS @ 100mm o/c x 260 HIGH PER RAIL
12.7
260
100
100
100

D5 PLAN DETAIL
S1-02
1 : 25

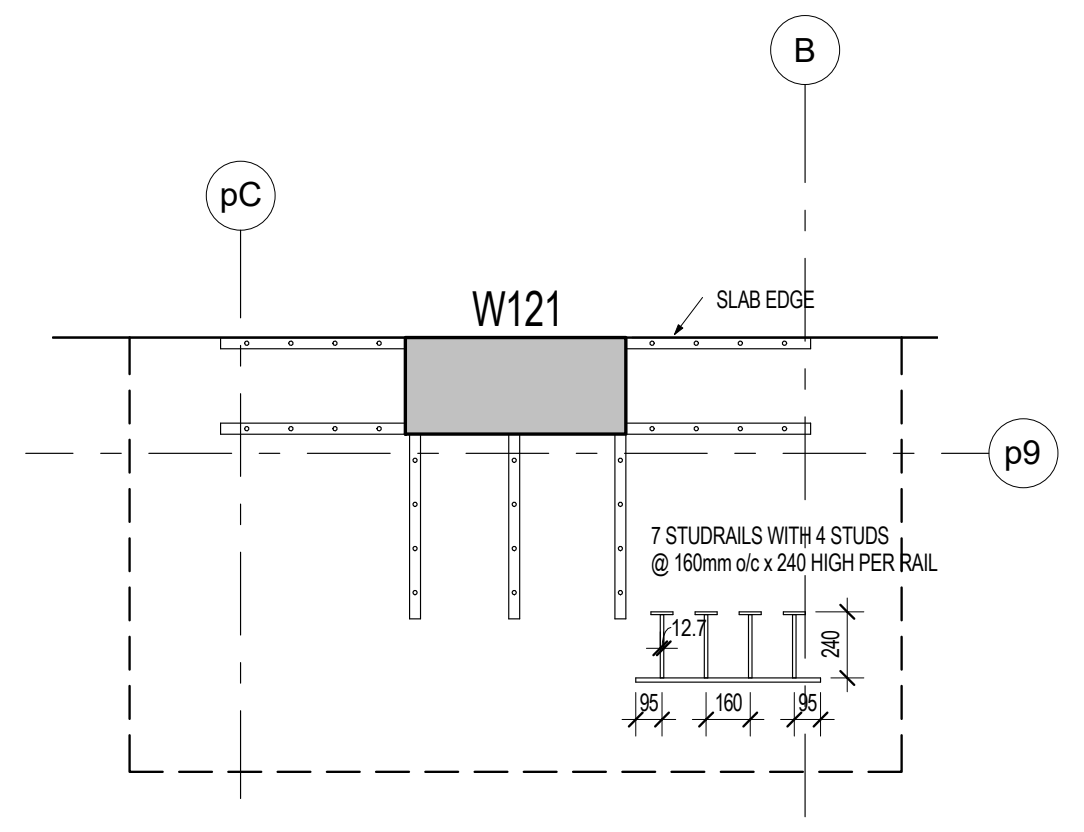
pC
B
W121
SLAB EDGE
p9
7 STUDRAILS WITH 4 STUDS @ 160mm o/c x 240 HIGH PER RAIL
12.7
240
95
160
95

D6 PLAN DETAIL
S1-02
1 : 25

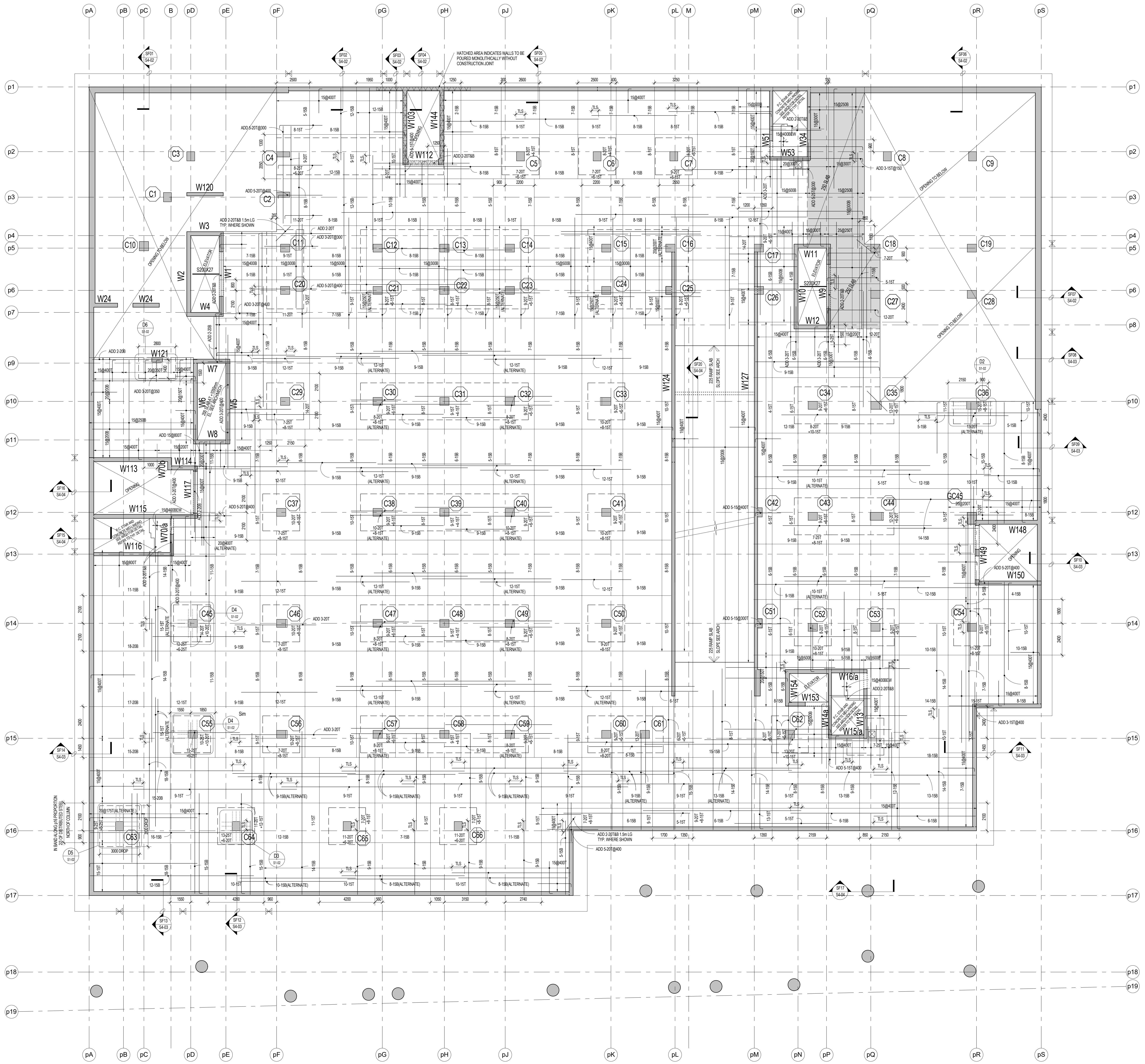
pA
pB
pC
B
pD
pE
pF
pG
pH
pJ
pK
pL
M
pM
pN
pP
pQ
pR
pS
p1
p2
p3
p4
p5
p6
p7
p8
p9
p10
p11
p12
p13
p14
p15
p16
p17
p18
p19
HATCHED AREA INDICATES WALLS TO BE POURED MONOLITHICALLY WITHOUT CONSTRUCTION JOINT
SF04
S4-02
SF05
S4-02
1250
300
2600
2500
W103
W144
W112
W120
W2
W3
W4
W1
W7
W6
W5
W8
W24
W121
W113
W114
W115
W116
W117
W124
W127
W11
W10
W9
W12
W51
W34
W53
W148
W149
W150
W153
W154
W16a
W15a
C1
C2
C3
C4
C5
C6
C7
C8
C9
C10
C11
C12
C13
C14
C15
C16
C17
C18
C19
C20
C21
C22
C23
C24
C25
C26
C27
C28
C29
C30
C31
C32
C33
C34
C35
C36
C37
C38
C39
C40
C41
C42
C43
C44
GC45
C45
C46
C47
C48
C49
C50
C51
C52
C53
C54
C55
C56
C57
C58
C59
C60
C61
C62
C63
C64
C65
C66
2-15B
7-15B
8-15B
9-15T
TLS
15@400T

LEVEL P3 FRAMING PLAN
1 : 100

1. TOP OF STRUCTURAL SLAB TO BE 0.0 mm BELOW FINISHED PARKING LEVEL DATUM ELEVATION 66.60m AT CENTRAL ELEVATOR CORE. TOP OF SLAB ELEVATION VARIES AND IS TO BE SLOPED TO SUIT DRAINAGE AS SHOWN ON THE ARCHITECTURAL DRAWINGS.
2. THE STRUCTURAL SLAB HAS BEEN DESIGNED FOR THE FOLLOWING LIVE LOADS (LL) AND SUPERIMPOSED DEAD LOADS (SDL) IN ADDITION TO THE SELF WEIGHT.

	LL	SDL
PARKING AND BIKE	2.4 kPa	0.5 kPa
STORAGE	7.2 kPa	0.5 kPa
STAIRS AND ELEVATOR LOBBIES	4.8 kPa	0.5 kPa

3. CONCRETE SHALL MEET THE REQUIREMENTS FOR CLASS CI EXPOSURE AND SHALL HAVE A MINIMUM COMPRESSIVE STRENGTH OF 35 MPa AT 28 DAYS. REFER ALSO TO COLUMN AND WALL SCHEDULES. SEE ALSO CONCRETE MIX SCHEDULE ON S0-02.
4. CONCRETE COVER FOR TOP BARS IN SLABS TO BE 40 mm, CONCRETE COVER FOR BOTTOM BARS IN SLABS TO BE 30mm.
5. APPROVAL MUST BE OBTAINED FROM ENGINEER FOR ALL OPENINGS OTHER THAN THOSE SHOWN ON PLAN.
6. THE PROJECT SUPERINTENDENT MUST CONTACT THIS OFFICE 24 HOURS PRIOR TO PLACING STRUCTURAL CONCRETE FOR A REVIEW OF PREPARATIONS.
7. SEE TYPICAL DETAIL FOR LINTELS IN NON-LOAD BEARING MASONRY WALLS.
8. SEE ARCHITECTURAL DRAWINGS AND MECHANICAL DRAWINGS FOR CURBS, REINFORCE AS PER TYPICAL DETAIL.
9. SEE COLUMN AND WALL SCHEDULES.
10. SEE ALSO TYPICAL NOTE AND DETAIL DRAWINGS.
11. REFER TO BEAM SCHEDULES.
12. AT SLEEVES THROUGH THE SLAB, HOOK BARS AT OPENING AND ADD BARS OF SAME SIZE ON EACH SIDE OF THE OPENING, EQUAL TO 1/2 THE NUMBER OF BARS HOOKED.
13. PROVIDE 25mm CHAMFER ON ALL EXPOSED EDGES OF COLUMNS, WALLS, BEAMS AND DROPS.
14. AREAS NOTED THUS ▨ ON PLAN, INDICATE THICKENED SLAB: SEE PLAN FOR THICKNESS. TRANSFER SLABS TO BE SHORED UNTIL REACH SPECIFIED 28 DAYS CONCRETE STRENGTH. SHORING SHOULD NOT BE SUPPORTED ON BUILDING SLABS.
15. PROVIDE DCI AT A DOSAGE OF 10L/m³ CONCRETE IN THE FRAMED RAMP SLAB AND ALL TURNING AREAS.
16. SLAB SOFFIT TO FOLLOW TOP OF SLAB SLOPES TO MAINTAIN SLAB THICKNESS AS NOTED.
17. WHERE BOTTOM STEEL NOT SHOWN, PROVIDE CONTINUOUS TEMPERATURE STEEL, HOOKED AT EDGE OF SLAB AND OPENINGS.

TUL = TOP UPPER LAYER
TLL = TOP LOWER LAYER
BUL = BOTTOM UPPER LAYER
BLL = BOTTOM LOWER LAYER

REINFORCEMENT PLACEMENT DIAGRAM

SLAB:	200 MIN. u/n
INTEGRITY BARS:	3-20M BEW
TEMP. STEEL:	15@500
DROP:	2800x2800x110DP. u/n
CONCRETE STRENGTH:	35 MPa CLASS C1
SLAB:	225 RAMP SLAB
INTEGRITY BARS:	3-20M BEW
TEMP. STEEL:	15@400
CONCRETE STRENGTH:	35 MPa CLASS C1
SLAB:	250 MIN.
INTEGRITY BARS:	3-20M BEW
TEMP. STEEL:	15@400
CONCRETE STRENGTH:	35 MPa CLASS C1
SLAB:	310 MIN.
INTEGRITY BARS:	3-20M BEW
TEMP. STEEL:	15@300
CONCRETE STRENGTH:	35 MPa CLASS C1

Contractor Must Check And Verify All Dimensions On The Job.

Do Not Scale The Drawings.

All Drawings, Specifications And Related Documents Are The Copyright Of The Architect And Must Be Returned Upon Request.

Reproduction Of Drawings, Specifications And Related Documents In Part Or Whole Is Forbidden Without The Architects Written Permission.

This Drawing Is Not To Be Used For Construction Until Signed ByThe Architect.

Date:

DEC.18,2015 DEC.18,2015

stephenson ENGINEERING
2550 Victoria Park Ave. Suite 602
Toronto ON M2J 5A9 | Tel: (416) 635 9970
www.stephenson-eng.com | info@stephenson-eng.com

No	Revision	Date

No	Issued For	Date
7	ISSUED FOR STEEL TENDER	DEC.18,2015
4	BUILDING PERMIT RESUBMISSION	SEPT.21,2015
3	BUILDING PERMIT RESUBMISSION	JULY 22,2015
2	BUILDING PERMIT SUBMISSION	JUNE 12,2015
1	ISSUED FOR WT REVIEW	MAY 01,2015

AQUAVISTA
AT BAYSIDE TORONTO

Drawing Title
LEVEL P3 FLOOR
FRAMING PLAN

Project
Hines TRIDEL®
AQUAVISTA
Block 3 - R3 & R4
Merchant's Whart
Toronto, ON

Scale
As indicated
Drawn by
DC
Checked by
PC/BBS
Project No.
20140031
Date
DEC.18,2015
Drawing No.
S1-02

Plot Date: 3/9/2016 9:58:31 AM

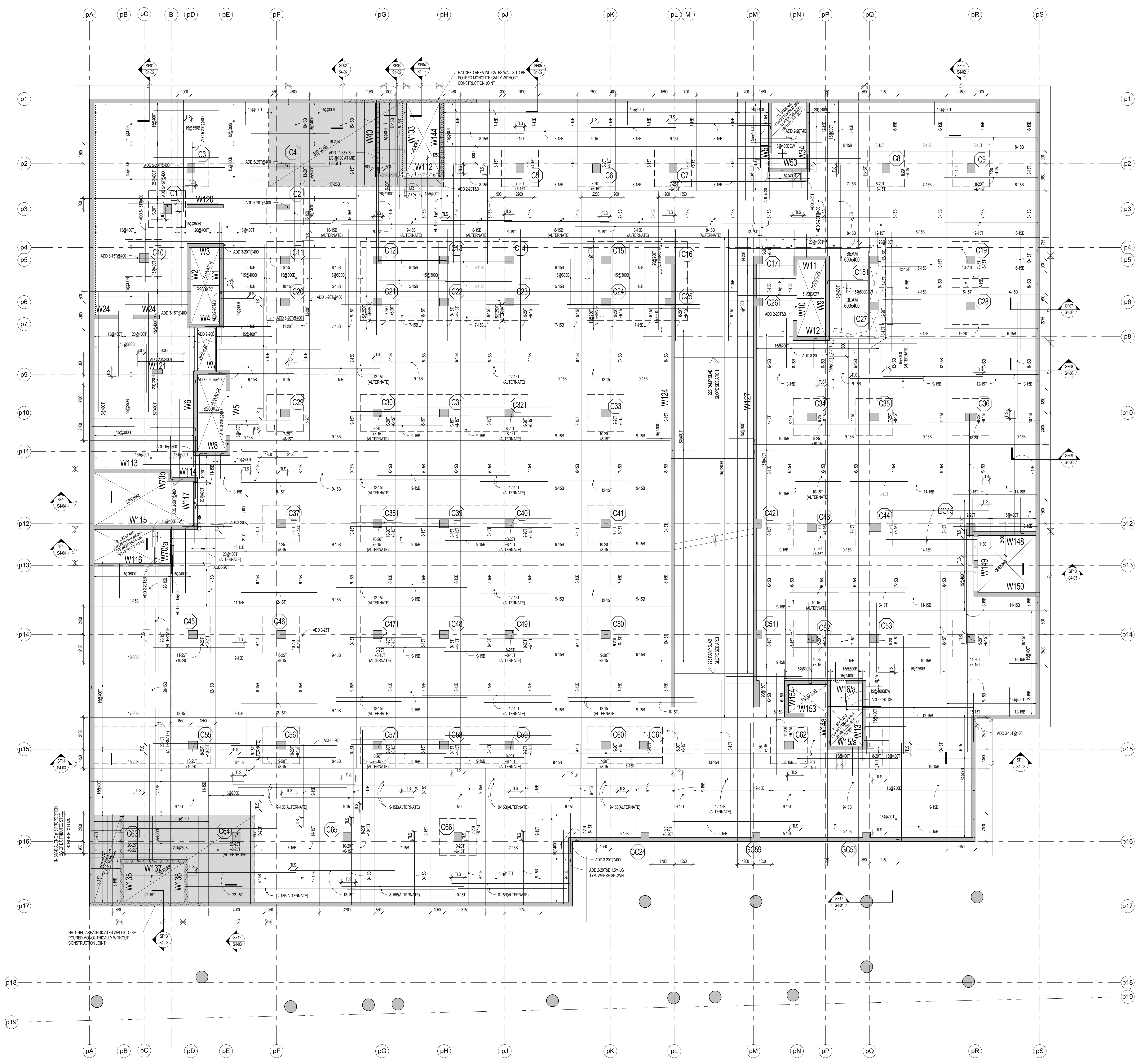
pA
pB
pC
B
pD
pE
pF
pG
pH
pJ
pK
pL
M
pM
pN
pP
pQ
pR
pS
p1
p2
p3
p4
p5
p6
p7
p8
p9
p10
p11
p12
p13
p14
p15
p16
p17
p18
p19
HATCHED AREA INDICATES WALLS TO BE POURED MONOLITHICALLY WITHOUT CONSTRUCTION JOINT
W3
W2
W4
W24
W120
W121
W7
W6
W5
W8
W113
W114
W117
W115
W116
W40
W103
W144
W112
W51
W34
W53
W11
W10
W9
W12
W124
W127
W148
W149
W150
W154
W16/a
W153
W148
W15/a
W135
W137
W138
310 SLAB
C1
C2
C3
C4
C5
C6
C7
C8
C9
C10
C11
C12
C13
C14
C15
C16
C17
C18
C19
C20
C21
C22
C23
C24
C25
C26
C27
C28
C29
C30
C31
C32
C33
C34
C35
C36
C37
C38
C39
C40
C41
C42
C43
C44
GC45
C45
C46
C47
C48
C49
C50
C51
C52
C53
C55
C56
C57
C58
C59
C60
C61
C62
C63
C64
C65
C66
GC24
GC59
GC55
225 RAMP SLAB SLOPE SEE ARCH
SF13 S4-03
SF12 S4-03
SF05 S4-02
22-15T
TLS

LEVEL P2 FRAMING PLAN

1 : 100

1. TOP OF STRUCTURAL SLAB VARIES FROM FINISHED PARKING LEVEL DATUM ELEVATION 69.400m AT ELEVATOR CORE. TOP OF SLAB ELEVATION VARIES AND IS TO BE SLOPED TO SUIT DRAINAGE AS SHOWN ON THE ARCHITECTURAL DRAWINGS.
2. THE STRUCTURAL SLAB HAS BEEN DESIGNED FOR THE FOLLOWING LIVE LOADS (LL) AND SUPERIMPOSED DEAD LOADS (SDL) IN ADDITION TO THE SELF WEIGHT.

	LL	SDL
PARKING	2.4 kPa	0.5 kPa
STORAGE AND LOCKERS	7.2 kPa	0.5 kPa
STAIRS AND ELEVATOR LOBBIES	4.8 kPa	0.5 kPa
MECANICAL AND ELECTRICAL	3.6 kPa	6.0 kPa
AMENITY	4.8 kPa	1.5 kPa
WATER TANK	10 kN/m³	1.0 kPa
WHIRLPOOL / SPA AREA	10kPa	1.5 kPa

3. CONCRETE SHALL MEET THE REQUIREMENTS FOR CLASS CI EXPOSURE AND SHALL HAVE A MINIMUM COMPRESSIVE STRENGTH OF 35 MPa AT 28 DAYS. REFER ALSO TO COLUMN AND WALL SCHEDULES. SEE ALSO CONCRETE MIX SCHEDULE ON FOUNDATION PLAN.
4. CONCRETE COVER FOR TOP BARS IN SLABS TO BE 40 mm, CONCRETE COVER FOR BOTTOM BARS IN SLABS TO BE 30mm.
5. APPROVAL MUST BE OBTAINED FROM ENGINEER FOR ALL OPENINGS OTHER THAN THOSE SHOWN ON PLAN.
6. THE PROJECT SUPERINTENDENT MUST CONTACT THIS OFFICE 24 HOURS PRIOR TO PLACING STRUCTURAL CONCRETE FOR A REVIEW OF PREPARATIONS.
7. SEE TYPICAL DETAIL FOR LINTELS IN NON-LOAD BEARING MASONRY WALLS.
8. SEE ARCHITECTURAL DRAWINGS AND MECHANICAL DRAWINGS FOR CURBS, REINFORCE AS PER TYPICAL DETAIL.
9. SEE COLUMN AND WALL SCHEDULES.
10. SEE ALSO TYPICAL NOTE AND DETAIL DRAWINGS.
11. REFER TO BEAM SCHEDULES.
12. AT SLEEVES THROUGH THE SLAB, HOOK BARS AT OPENING AND ADD BARS OF SAME SIZE ON EACH SIDE OF THE OPENING, EQUAL TO 1/2 THE NUMBER OF BARS HOOKED.
13. PROVIDE 25mm CHAMFER ON ALL EXPOSED EDGES OF COLUMNS, WALLS, BEAMS AND DROPS.
14. AREAS NOTED THUS ▨ ON PLAN, INDICATE THICKENED SLAB: SEE PLAN FOR THICKNESS.

TRANSFER SLABS TO BE SHORED UNTIL REACH SPECIFIED 28 DAYS CONCRETE STRENGTH.

SHORING SHOULD NOT BE SUPPORTED ON BUILDING SLABS.

15. PROVIDE DCI AT A DOSAGE OF 10L/m³ CONCRETE IN THE FRAMED RAMP SLAB AND ALL TURNING AREAS.
16. SLAB SOFFIT TO FOLLOW TOP OF SLAB SLOPES TO MAINTAIN SLAB THICKNESS AS NOTED.
17. WHERE BOTTOM STEEL NOT SHOWN, PROVIDE CONTINUOUS TEMPERATURE STEEL.

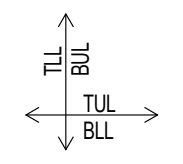
TLL
BUL
TUL
BLL

TUL = TOP UPPER LAYER
TLL = TOP LOWER LAYER
BUL = BOTTOM UPPER LAYER
BLL = BOTTOM LOWER LAYER

REINFORCEMENT PLACEMENT DIAGRAM

SLAB:	200 MIN. u/n
INTEGRITY BARS:	3-20M BEW
TEMP. STEEL:	15@500
DROP:	2800x2800x110DP. u/n
CONCRETE STRENGTH:	35 MPa CLASS C1
SLAB:	225 RAMP SLAB
INTEGRITY BARS:	3-20M BEW
TEMP. STEEL:	15@400
CONCRETE STRENGTH:	35 MPa CLASS C1
SLAB:	310 MIN.
INTEGRITY BARS:	3-20M BEW
TEMP. STEEL:	15@300
CONCRETE STRENGTH:	35 MPa CLASS C1

Contractor Must Check And Verify All Dimensions On The Job.

Do Not Scale The Drawings.

All Drawings, Specifications And Related Documents Are The Copyright Of The Architect And Must Be Returned Upon Request.

Reproduction Of Drawings, Specifications And Related Documents In Part Or Whole Is Forbidden Without The Architects Written Permission.

This Drawing Is Not To Be Used For Construction Until Signed ByThe Architect.

Date:

DEC.18,2015 DEC.18,2015

stephenson ENGINEERING
2550 Victoria Park Ave. Suite 602
Toronto ON M2J 5A9 | Tel: (416) 635 9970
www.stephenson-eng.com | info@stephenson-eng.com

No	Revision	Date

No	Issued For	Date
7	ISSUED FOR STEEL TENDER	DEC.18,2015
4	BUILDING PERMIT RESUBMISSION	SEPT.21,2015
3	BUILDING PERMIT RESUBMISSION	JULY 22,2015
2	BUILDING PERMIT SUBMISSION	JUNE 12,2015
1	ISSUED FOR WT REVIEW	MAY 01,2015

AQUAVISTA
AT BAYSIDE TORONTO

Drawing Title
LEVEL P2 FLOOR
FRAMING PLAN

Project
Hines TRIDEL®
AQUAVISTA
Block 3 - R3 & R4
Merchant's Whart
Toronto, ON

Scale
As indicated
Drawn by
DC
Checked by
BK/BBS
Project No.
20140031
Date
DEC.18,2015
Drawing No.
S1-03

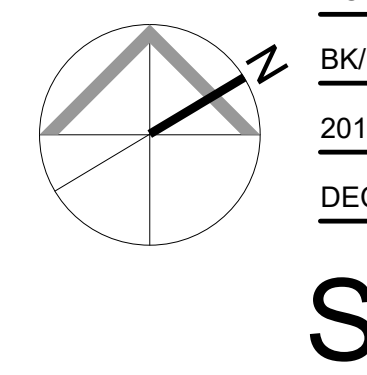

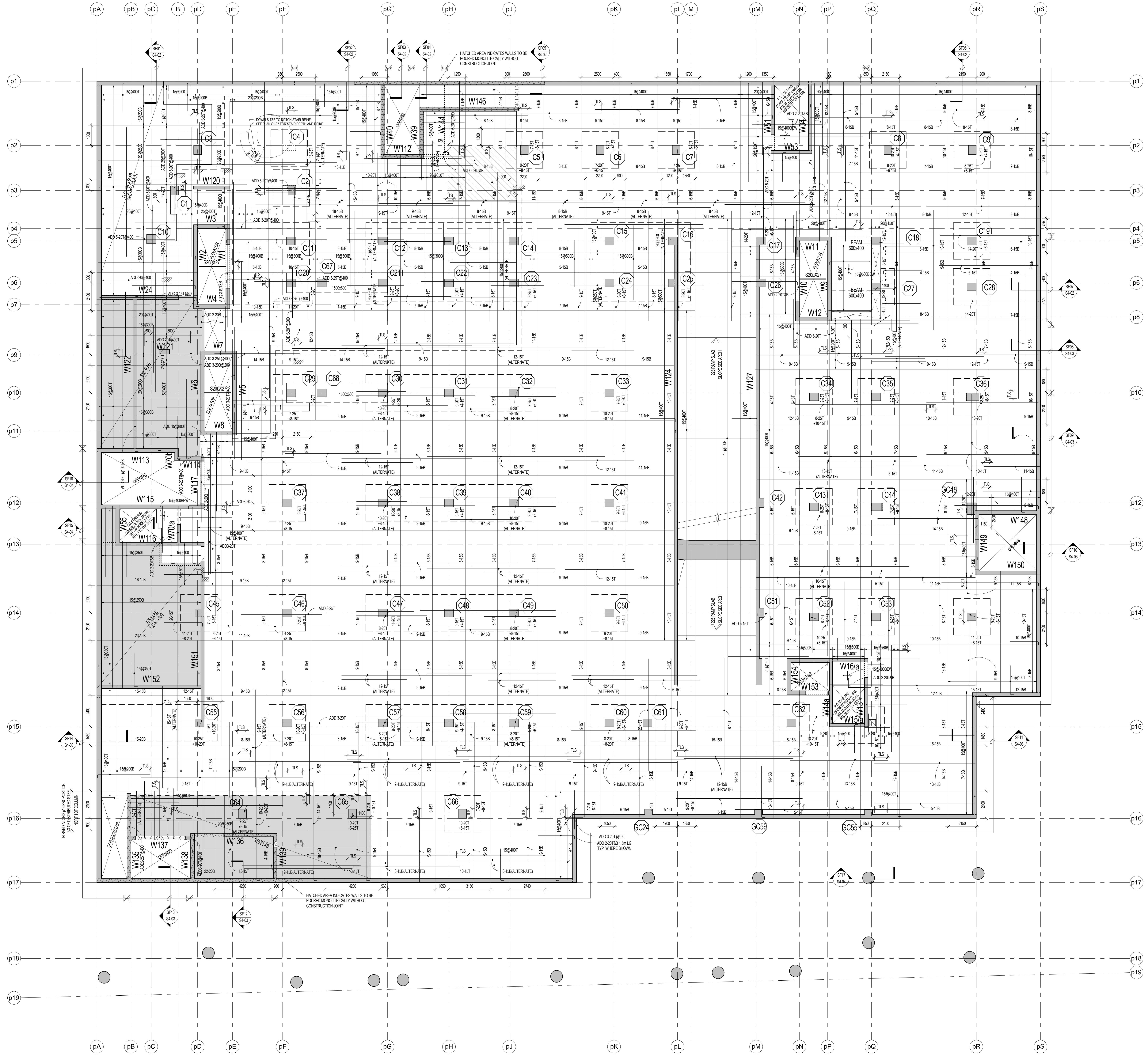

LEVEL P1 FRAMING PLAN

1 : 100

1. TOP OF STRUCTURAL SLAB VARIES FROM FINISHED PARKING LEVEL DATUM ELEVATION 72.200m AT ELEVATOR CORE. TOP OF SLAB ELEVATION VARIES AND IS TO BE SLOPED TO SUIT DRAINAGE AS SHOWN ON THE ARCHITECTURAL DRAWINGS.
2. THE STRUCTURAL SLAB HAS BEEN DESIGNED FOR THE FOLLOWING LIVE LOADS (LL) AND SUPERIMPOSED DEAD LOADS (SDL) IN ADDITION TO THE SELF WEIGHT.

	LL	SDL
PARKING	2.4 kPa	0.5 kPa
STORAGE AND LOCKERS	7.2 kPa	0.5 kPa
STAIRS AND ELEVATOR LOBBIES	4.8 kPa	0.5 kPa
MECANICAL AND ELECTRICAL	3.6 kPa	6.0 kPa
AMENITY	4.8 kPa	1.5 kPa
WATER TANK	10 kN/m³	1.0 kPa
WHIRLPOOL / SPA AREA	10kPa	1.5 kPa

3. CONCRETE SHALL MEET THE REQUIREMENTS FOR CLASS CI EXPOSURE AND SHALL HAVE A MINIMUM COMPRESSIVE STRENGTH OF 35 MPa AT 28 DAYS. REFER ALSO TO COLUMN AND WALL SCHEDULES. SEE ALSO CONCRETE MIX SCHEDULE ON FOUNDATION PLAN.
4. CONCRETE COVER FOR TOP BARS IN SLABS TO BE 40 mm, CONCRETE COVER FOR BOTTOM BARS IN SLABS TO BE 30mm.
5. APPROVAL MUST BE OBTAINED FROM ENGINEER FOR ALL OPENINGS OTHER THAN THOSE SHOWN ON PLAN.
6. THE PROJECT SUPERINTENDENT MUST CONTACT THIS OFFICE 24 HOURS PRIOR TO PLACING STRUCTURAL CONCRETE FOR A REVIEW OF PREPARATIONS.
7. SEE TYPICAL DETAIL FOR LINTELS IN NON-LOAD BEARING MASONRY WALLS.
8. SEE ARCHITECTURAL DRAWINGS AND MECHANICAL DRAWINGS FOR CURBS, REINFORCE AS PER TYPICAL DETAIL.
9. SEE COLUMN AND WALL SCHEDULES.
10. SEE ALSO TYPICAL NOTE AND DETAIL DRAWINGS.
11. REFER TO BEAM SCHEDULES.
12. AT SLEEVES THROUGH THE SLAB, HOOK BARS AT OPENING AND ADD BARS OF SAME SIZE ON EACH SIDE OF THE OPENING, EQUAL TO 1/2 THE NUMBER OF BARS HOOKED.
13. PROVIDE 25mm CHAMFER ON ALL EXPOSED EDGES OF COLUMNS, WALLS, BEAMS AND DROPS.
14. AREAS NOTED THUS ▒ ON PLAN, INDICATE THICKENED SLAB: SEE PLAN FOR THICKNESS.

    AREAS NOTED THUS ▨ ON PLAN, ARE BUILT-UP CONCRETE. SEE TYPICAL DETAILS.

    TRANSFER SLABS TO BE SHORED UNTIL REACH SPECIFIED 28 DAYS CONCRETE STRENGTH.

    SHORING SHOULD NOT BE SUPPORTED ON BUILDING SLABS.

15. PROVIDE DCI AT A DOSAGE OF 10L/m³ CONCRETE IN THE FRAMED RAMP SLAB AND ALL TURNING AREAS.
16. SLAB SOFFIT TO FOLLOW TOP OF SLAB SLOPES TO MAINTAIN SLAB THICKNESS AS NOTED.
17. WHERE BOTTOM STEEL NOT SHOWN, PROVIDE CONTINUOUS TEMPERATURE STEEL.

TLL
BUL
TUL
BLL

TUL = TOP UPPER LAYER
TLL = TOP LOWER LAYER
BUL = BOTTOM UPPER LAYER
BLL = BOTTOM LOWER LAYER

REINFORCEMENT PLACEMENT DIAGRAM

SLAB:	200 MIN. u/n
INTEGRITY BARS:	3-20M BEW
TEMP. STEEL:	15@500
DROP:	2800x2800x110DP. u/n
CONCRETE STRENGTH:	35 MPa CLASS C1
SLAB:	225 RAMP SLAB
INTEGRITY BARS:	3-20M BEW
TEMP. STEEL:	15@400
CONCRETE STRENGTH:	35 MPa CLASS C1
SLAB:	275 MIN.
INTEGRITY BARS:	3-20M BEW
TEMP. STEEL:	15@400
CONCRETE STRENGTH:	35 MPa CLASS C1
SLAB:	310 MIN.
INTEGRITY BARS:	3-20M BEW
TEMP. STEEL:	15@300
CONCRETE STRENGTH:	35 MPa CLASS C1

Contractor Must Check And Verify All Dimensions On The Job.

Do Not Scale The Drawings.

All Drawings, Specifications And Related Documents Are The Copyright Of The Architect And Must Be Returned Upon Request.

Reproduction Of Drawings, Specifications And Related Documents In Part Or Whole Is Forbidden Without The Architects Written Permission.

This Drawing Is Not To Be Used For Construction Until Signed ByThe Architect.

Date:

DEC.18,2015 DEC.18,2015

stephenson
ENGINEERING
2550 Victoria Park Ave. Suite 602
Toronto ON M2J 5A9 | Tel: (416) 635 9970
www.stephenson-eng.com | info@stephenson-eng.com

No	Revision	Date

No	Issued For	Date
7	ISSUED FOR STEEL TENDER	DEC.18,2015
4	BUILDING PERMIT RESUBMISSION	SEPT.21,2015
3	BUILDING PERMIT RESUBMISSION	JULY 22,2015
2	BUILDING PERMIT SUBMISSION	JUNE 12,2015
1	ISSUED FOR WT REVIEW	MAY 01,2015

AQUAVISTA
AT BAYSIDE TORONTO

Drawing Title

LEVEL P1 FLOOR
FRAMING PLAN

Project

Hines TRIDEL®

AQUAVISTA
Block 3 - R3 & R4
Merchant's Whart
Toronto, ON

Scale
As indicated
Drawn by
DC
Checked by
PC/BBS
Project No.
20140031
Date
DEC.18,2015
Drawing No.
S1-04

Plot Date: 3/9/2016 9:58:38 AM

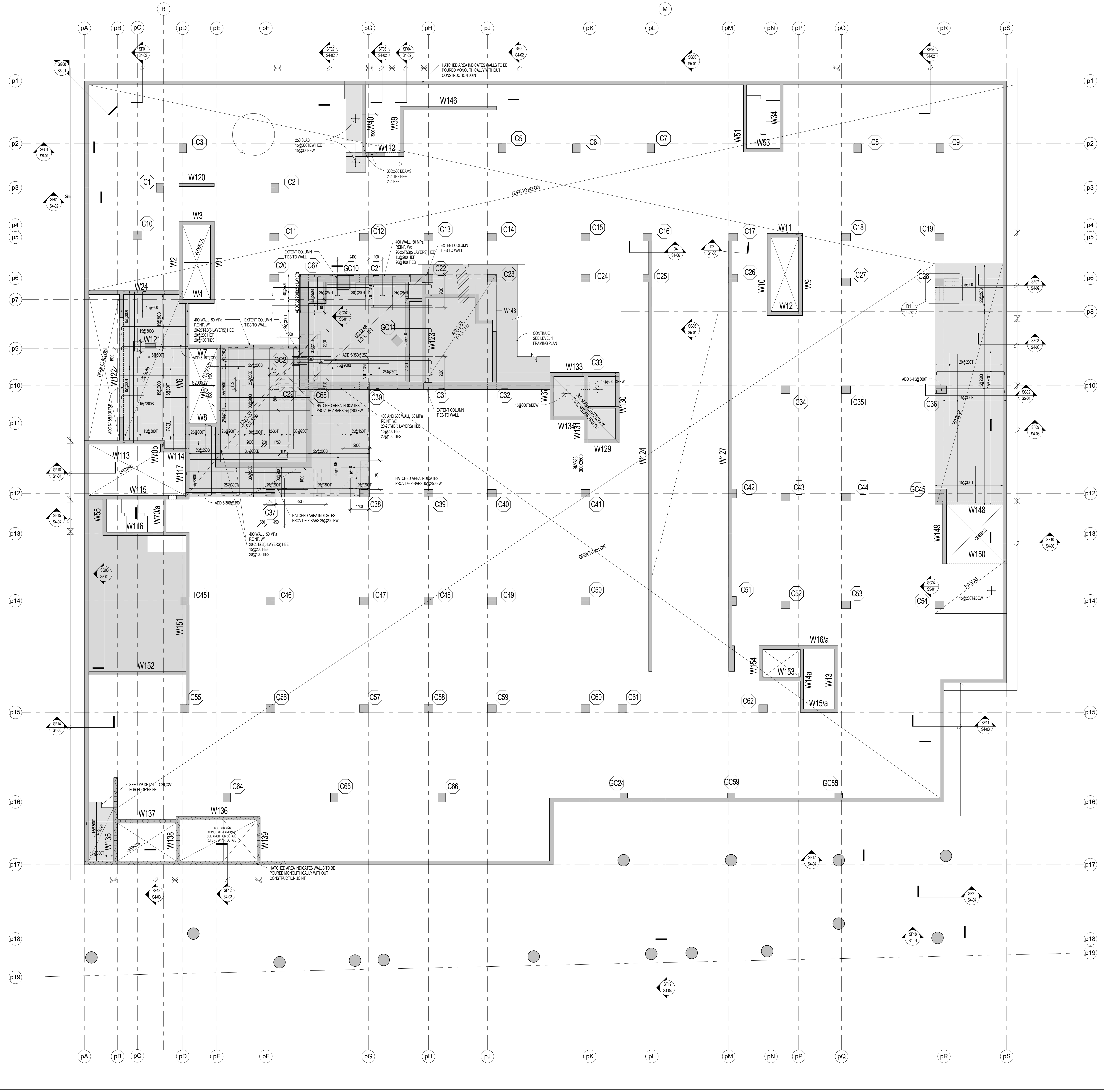
pA
pB
pC
pD
pE
pF
pG
pH
pJ
pK
pL
pM
pN
pP
pQ
pR
pS
B
M
p1
p2
p3
p4
p5
p6
p7
p8
p9
p10
p11
p12
p13
p14
p15
p16
p17
p18
p19
HATCHED AREA INDICATES WALLS TO BE POURED MONOLITHICALLY WITHOUT CONSTRUCTION JOINT
OPEN TO BELOW
W146
W40
W39
W112
W51
W34
W53
W120
W3
W2
W1
W4
W24
W121
W122
W7
W6
W5
W8
W123
W143
W133
W37
W130
W134
W131
W129
W124
W127
W11
W10
W9
W12
W113
W70b
W114
W117
W115
W55
W116
W70a
W151
W152
W148
W149
W150
W16/a
W154
W153
W14a
W13
W15/a
W137
W136
W135
W138
W139
C1
C2
C3
C5
C6
C7
C8
C9
C10
C11
C12
C13
C14
C15
C16
C17
C18
C19
C20
C67
GC10
C21
C22
C23
C24
C25
C26
C27
C28
GC11
GC2
C29
C68
C30
C31
C32
C33
C34
C35
C36
C37
C38
C39
C40
C41
C42
C43
C44
GC45
C45
C46
C47
C48
C49
C50
C51
C52
C53
C54
C55
C56
C57
C58
C59
C60
C61
C62
C64
C65
C66
GC24
GC59
GC55
EXTENT COLUMN TIES TO WALL
400 WALL 50 MPa REINF. W/: 20-25T&B(5 LAYERS) HEE 15@200 HEF 20@100 TIES
400 AND 600 WALL 50 MPa REINF. W/: 20-25T&B(5 LAYERS) HEE 15@200 HEF 20@100 TIES
600 SLAB T.O.S. 1150
800 SLAB T.O.S. 1150
800 SLAB T.O.S. 1050
ADD 5-35B@250
HATCHED AREA INDICATES PROVIDE Z-BARS 25@200 EW
HATCHED AREA INDICATES PROVIDE Z-BARS 15@250 EW
CONTINUE SEE LEVEL 1 FRAMING PLAN
15@300T&BEW
BMG33 300X2600
SG07 S5-01
SEE TYP DETAIL T-C26,C27 FOR EDGE REINF.
HATCHED AREA INDICATES WALLS TO BE POURED MONOLITHICALLY WITHOUT CONSTRUCTION JOINT

LEVEL P1 MEZZ. FRAMING PLAN

1 : 100

1. TOP OF LEVEL 1 MEZZANINE FLOOR STRUCTURAL SLAB TO BE 0.0 mm BELOW FINISHED GROUND FLOOR DATUM ELEVATION 75.00m. THE STRUCTURAL SLAB STEPS AT THE EDGE OF GROUND FLOOR. SEE PLAN AND DETAILS FOR ELEVATION CHANGES. SEE ALSO ARCHITECTURAL DRAWINGS AND LANDSCAPE DRAWINGS FOR GARAGE ROOF ELEVATIONS AND SLOPES TO DRAINS.
2. THE STRUCTURAL SLAB HAS BEEN DESIGNED FOR THE FOLLOWING LIVE LOADS (LL) AND SUPERIMPOSED DEAD LOADS (SDL) IN ADDITION TO SELF WEIGHT.

	LL	SDL
STAIRS / MEZZANINE	4.8 kPa	0.5 kPa

3. CONCRETE SHALL MEET THE REQUIREMENTS FOR CLASS C1 EXPOSURE AND SHALL HAVE A MINIMUM COMPRESSIVE STRENGTH OF 35 MPa AT 28 DAYS. REFER ALSO TO COLUMN AND WALL SCHEDULES. SEE ALSO CONCRETE MIX SCHEDULE ON FOUNDATION PLAN.
4. CONCRETE COVER FOR TOP BARS IN SLABS TO BE 25 mm, CONCRETE COVER FOR BOTTOM BARS IN SLABS TO BE 30 mm.
5. APPROVAL MUST BE OBTAINED FROM ENGINEER FOR ALL OPENINGS OTHER THAN THOSE SHOWN ON PLAN.
6. THE PROJECT SUPERINTENDENT MUST CONTACT THIS OFFICE 48 HOURS PRIOR TO PLACING STRUCTURAL CONCRETE FOR A REVIEW OF PREPARATIONS.
7. SEE TYPICAL DETAIL FOR LINTELS IN NON-LOAD BEARING MASONRY WALLS.
8. SEE ARCHITECTURAL DRAWINGS AND MECHANICAL DRAWINGS FOR CURBS, REINFORCE AS PER TYPICAL DETAIL.
9. SEE COLUMN AND WALL SCHEDULES.
10. SEE ALSO TYPICAL NOTE AND DETAIL DRAWINGS.
11. REFER TO BEAM SCHEDULES.
12. PROVIDE 25mm CHAMFER ON ALL EXPOSED EDGES OF COLUMNS, WALLS, BEAMS & DROPS.
13. WHERE BOTTOM STEEL NOT SHOWN, PROVIDE CONTINUOUS TEMPERATURE STEEL, HOOKED AT EDGE OF SLAB AND OPENINGS.

TLL | BUL
TUL
BLL

TUL = TOP UPPER LAYER
TLL = TOP LOWER LAYER
BUL = BOTTOM UPPER LAYER
BLL = BOTTOM LOWER LAYER

REINFORCEMENT PLACEMENT DIAGRAM

SLAB:	200 MIN.
INTEGRITY BARS:	3-20M BEW
CONCRETE STRENGTH:	35 MPa
TEMP. STEEL:	15@450 u/n
SLAB:	250 MIN.
INTEGRITY BARS:	3-20M BEW
CONCRETE STRENGTH:	35 MPa
TEMP. STEEL:	15@400 u/n
SLAB:	300 MIN.
INTEGRITY BARS:	3-30M BEW
CONCRETE STRENGTH:	35 MPa
TEMP. STEEL:	15@300 u/n
SLAB:	800 MIN.
INTEGRITY BARS:	5-30M BEW
CONCRETE STRENGTH:	45 MPa
TEMP. STEEL:	25@300 u/n

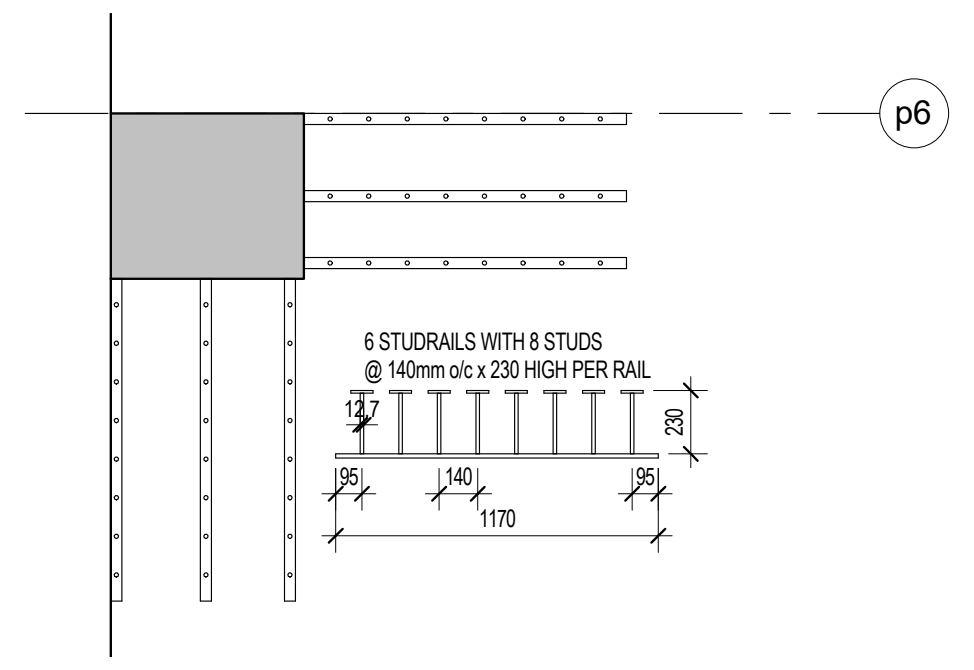
p6
6 STUDRAILS WITH 8 STUDS @ 140mm o/c x 230 HIGH PER RAIL
12.7
230
95
140
95
1170

D1
S1-05
DETAIL
1 : 25

Contractor Must Check And Verify All Dimensions On The Job.

Do Not Scale The Drawings.

All Drawings, Specifications And Related Documents Are The Copyright Of The Architect And Must Be Returned Upon Request.

Reproduction Of Drawings, Specifications And Related Documents In Part Or Whole Is Forbidden Without The Architects Written Permission.

This Drawing Is Not To Be Used For Construction Until Signed ByThe Architect.

Date:

DEC.18,2015
DEC.18,2015

stephenson
ENGINEERING
2550 Victoria Park Ave. Suite 602
Toronto ON M2J 5A9 | Tel: (416) 635 9970
www.stephenson-eng.com | info@stephenson-eng.com

No	Revision	Date

No	Issued For	Date
7	ISSUED FOR STEEL TENDER	DEC.18,2015
4	BUILDING PERMIT RESUBMISSION	SEPT.21,2015
3	BUILDING PERMIT RESUBMISSION	JULY 22,2015
2	BUILDING PERMIT SUBMISSION	JUNE 12,2015
1	ISSUED FOR WT REVIEW	MAY 01,2015

AQUAVISTA
AT BAYSIDE TORONTO

Drawing Title
LEVEL P1 MEZZANINE
FRAMING PLAN

Project
Hines TRIDEL
AQUAVISTA
Block 3 - R3 & R4
Merchant's Whart
Toronto, ON

Scale
As indicated
Drawn by
DC
Checked by
PC/BBS
Project No.
20140031
Date
DEC.18,2015
Drawing No.
S1-05

Plot Date: 3/9/2016 9:58:40 AM

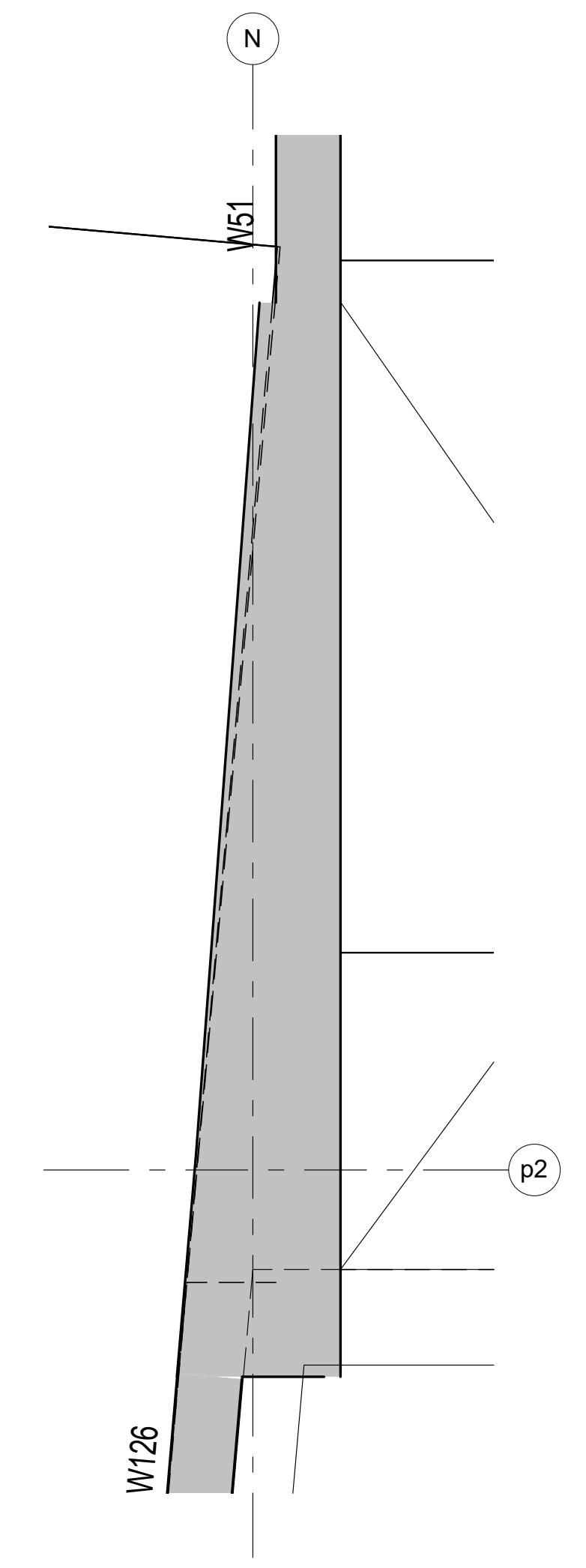

D5 PLAN DETAIL
S1-06
1 : 20

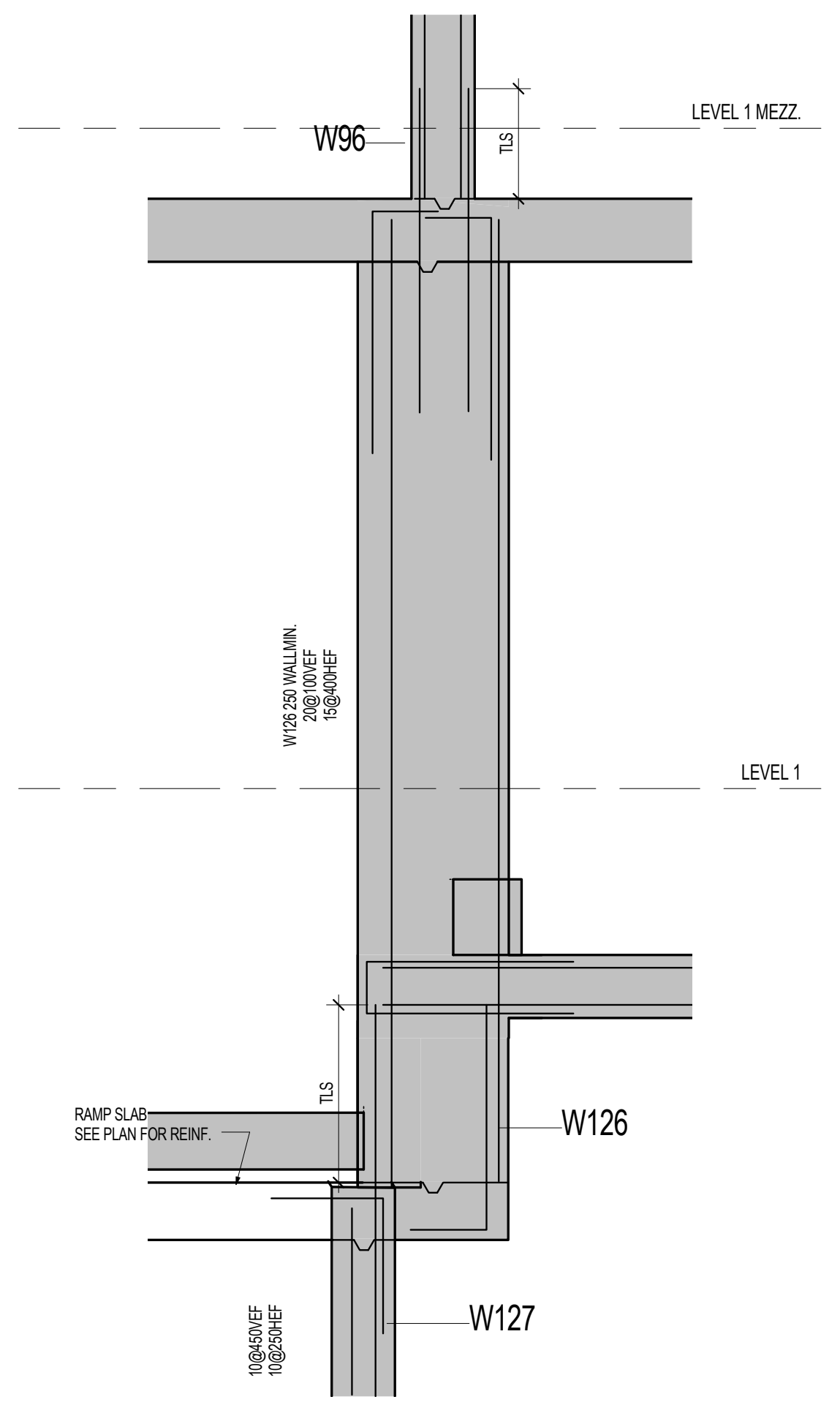

D2 ELEVATION DETAIL
S1-06
1 : 20

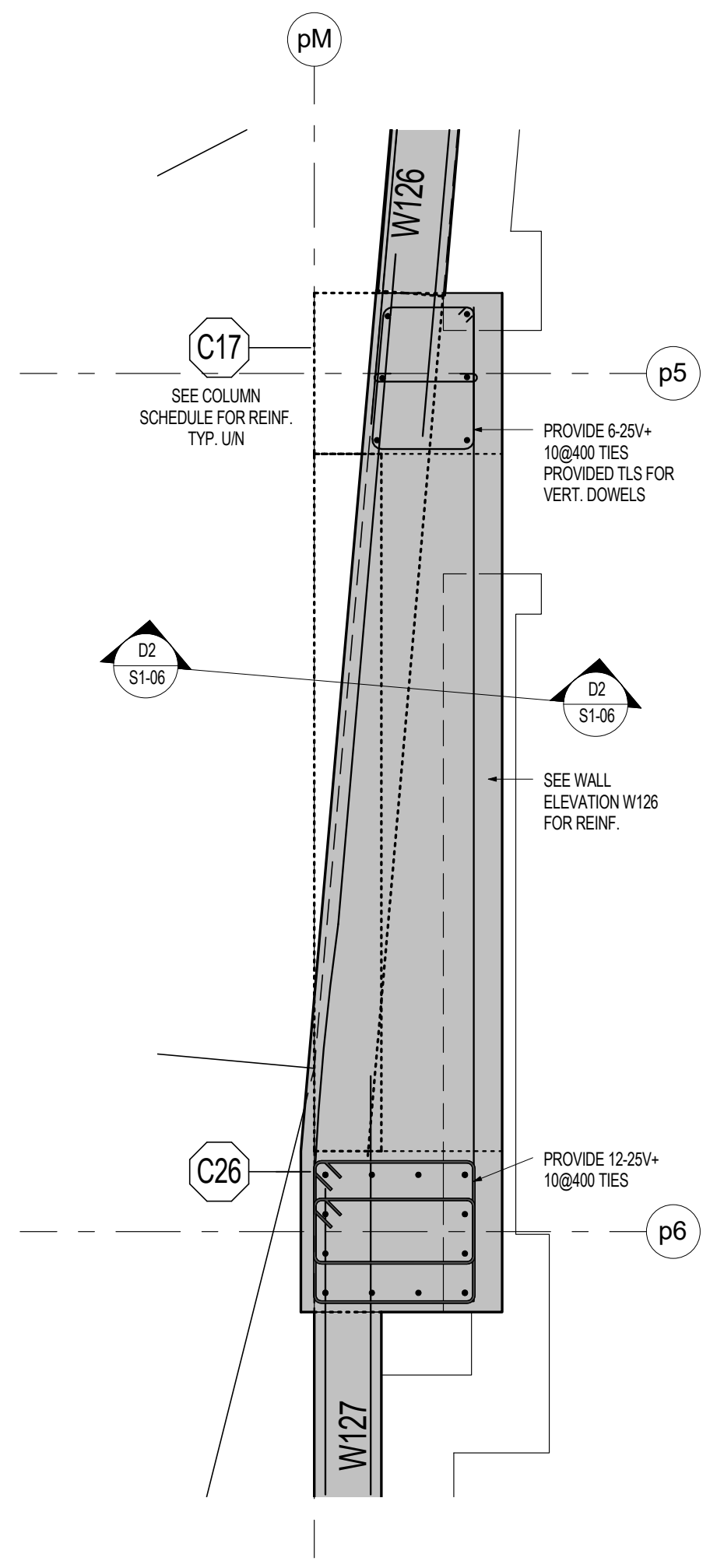
pM
W126
C17
SEE COLUMN SCHEDULE FOR REINF TYP. U/N
p5
C26
p6
W127
SEE WALL ELEVATION W126 FOR REINF

D1 PLAN DETAIL
S1-06
1 : 20

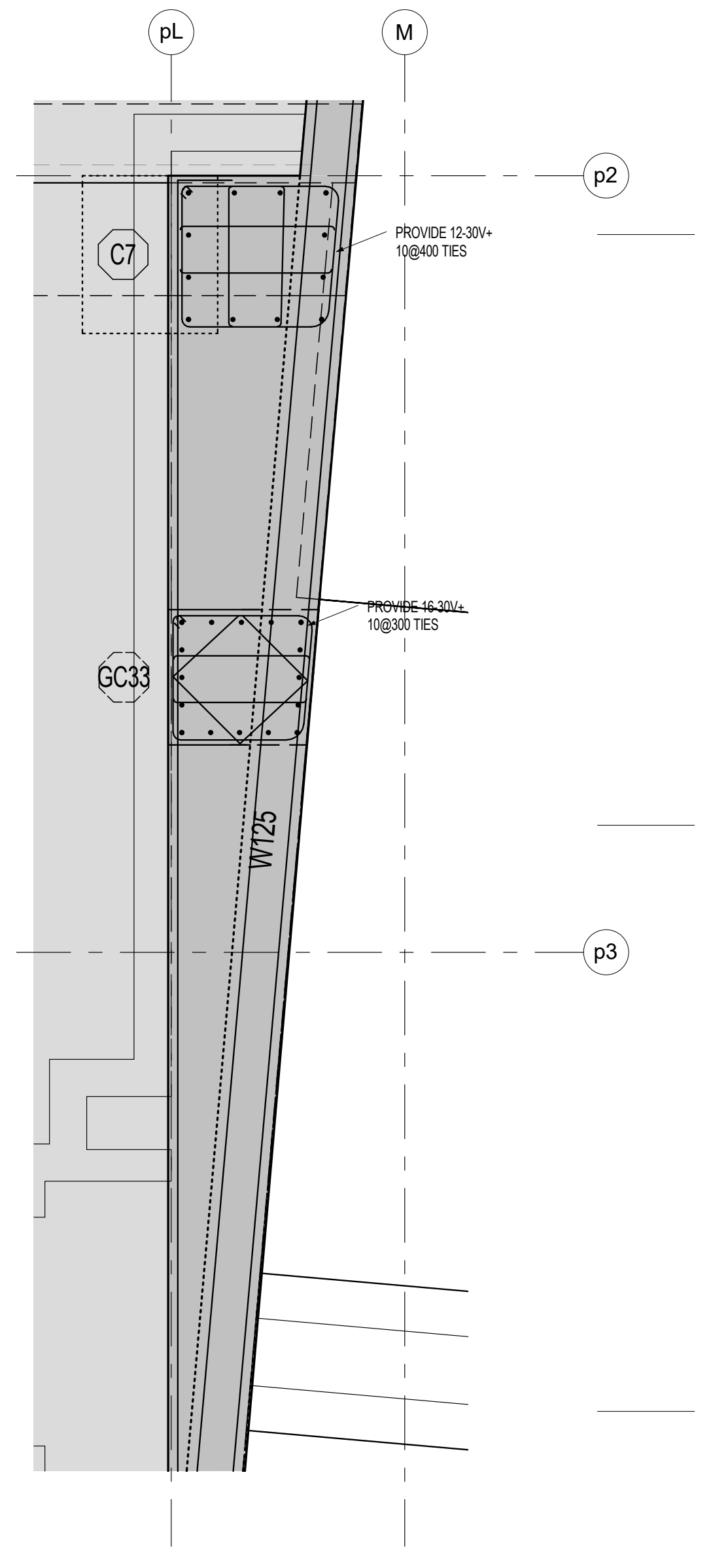

D6 PLAN DETAIL
S1-06
1 : 20

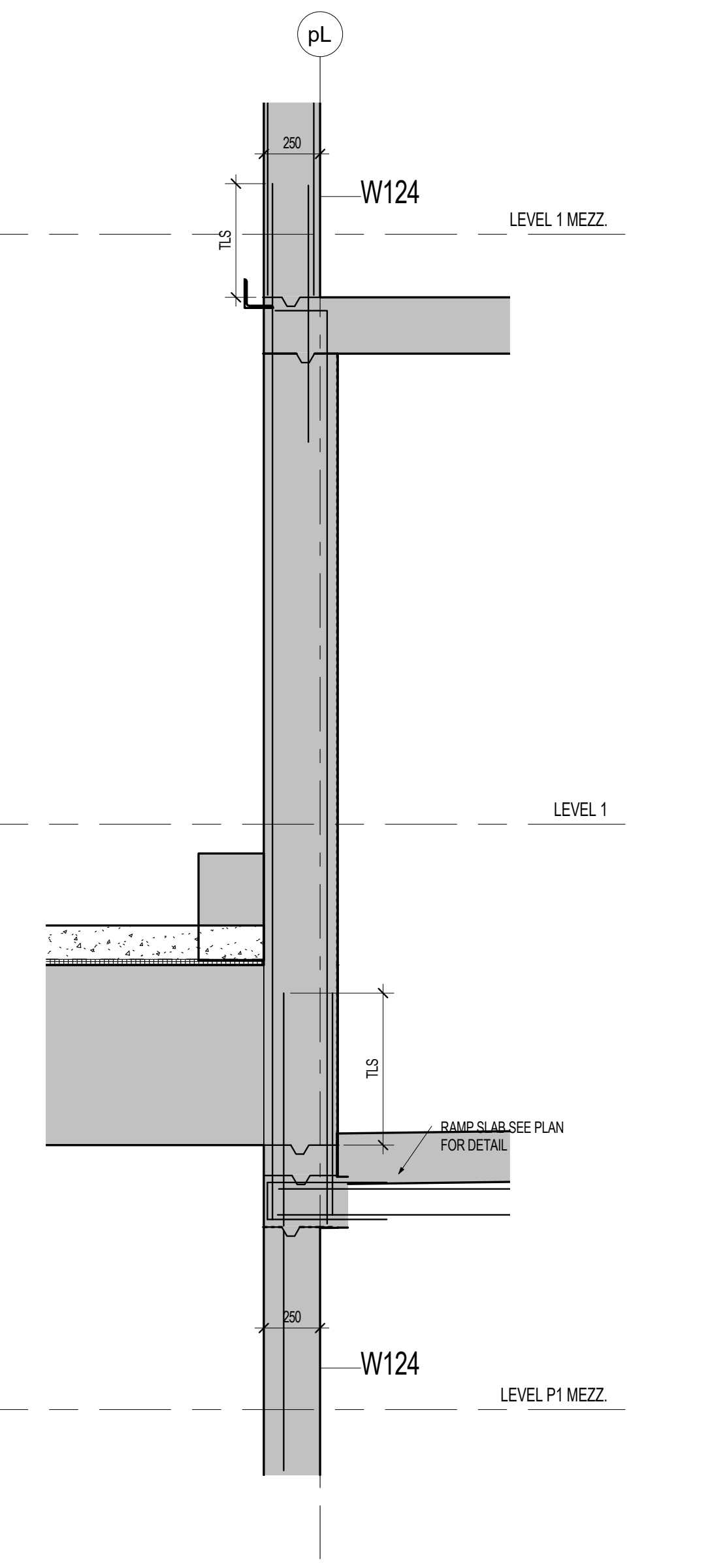

D4 PLAN DETAIL
S1-06
1 : 20

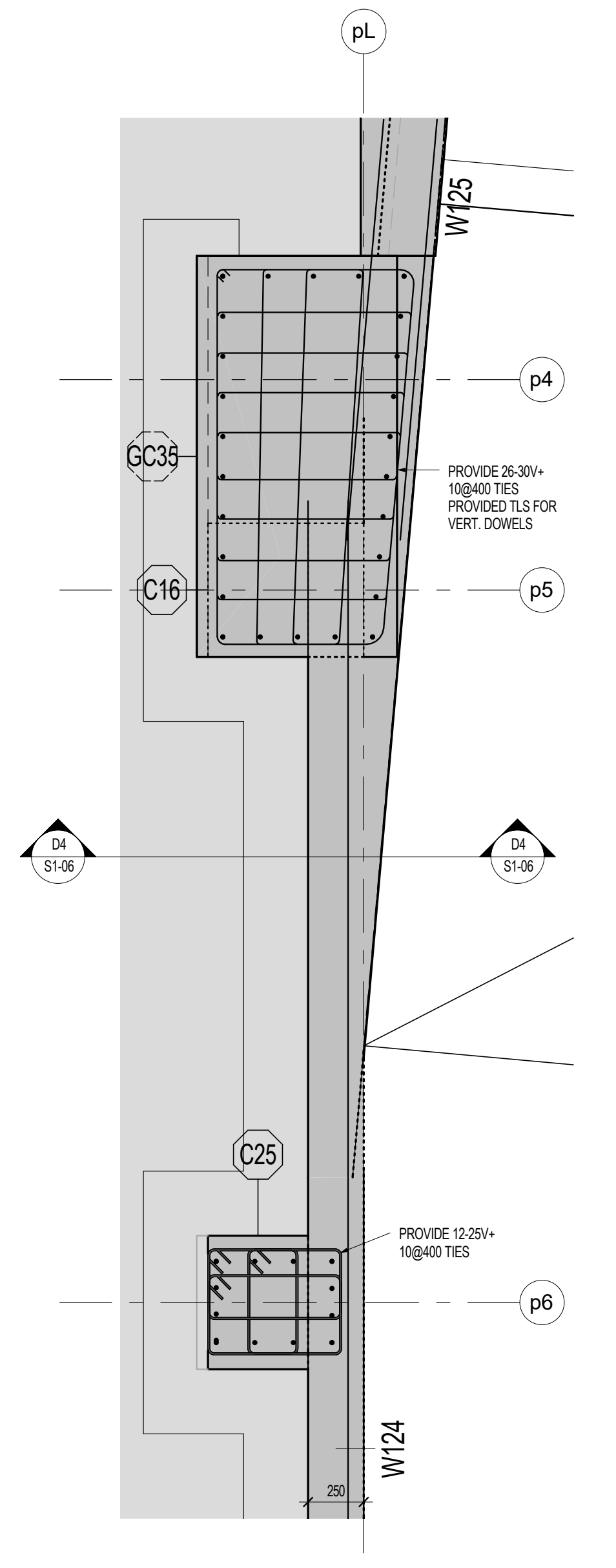

D3 PLAN DETAIL
S1-06
1 : 20

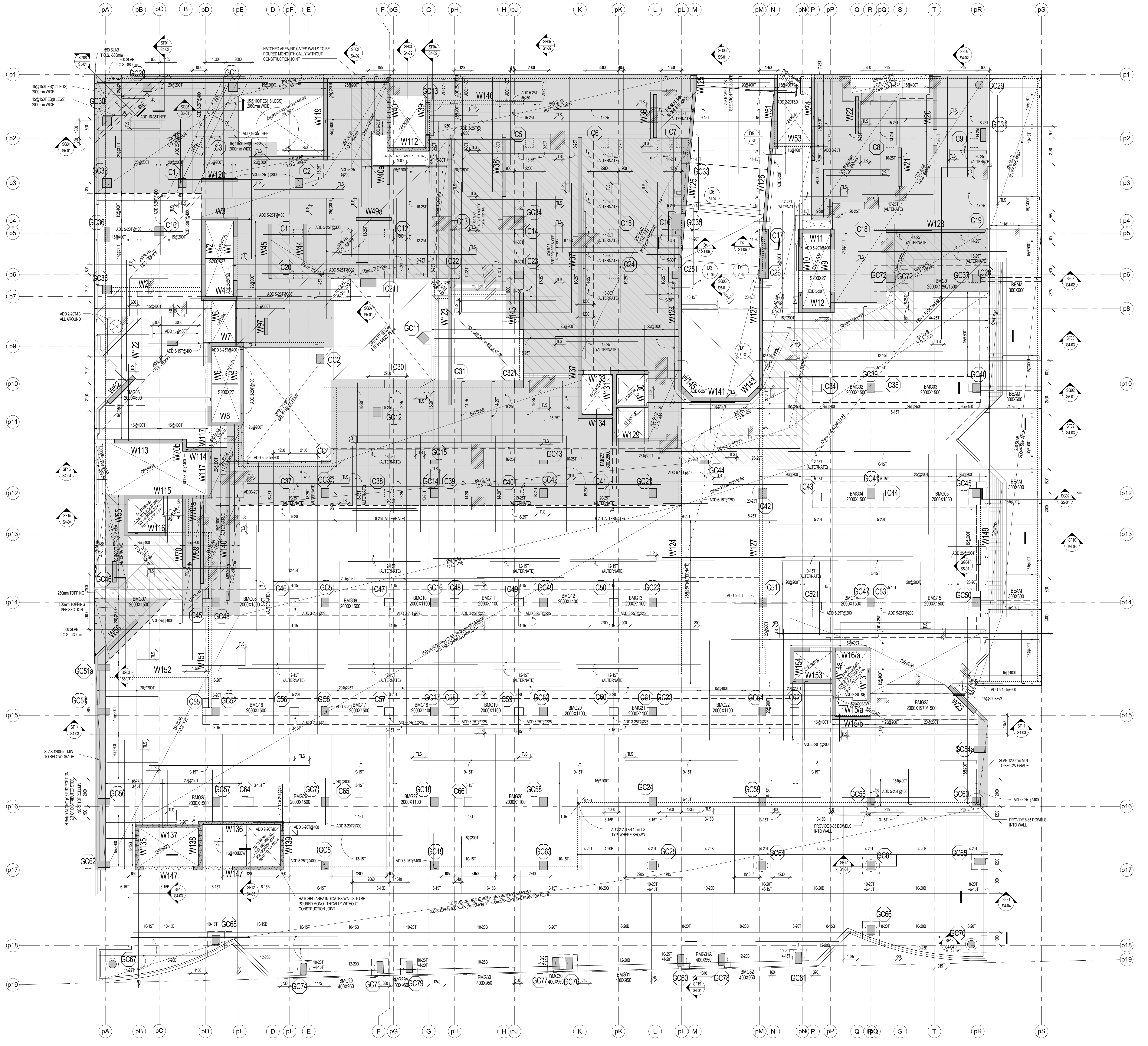

LEVEL 1 FRAMING PLAN WITH TOP REINFORCEMENT
1 : 100

1. TOP OF GROUND FLOOR STRUCTURAL SLAB VARIES FROM FINISHED GROUND FLOOR DATUM ELEVATION 77.600m. THE STRUCTURAL SLAB STEPS AT THE EDGE OF GROUND FLOOR. SEE PLAN AND DETAILS FOR ELEVATION CHANGES. SEE ALSO ARCHITECTURAL DRAWINGS AND LANDSCAPE DRAWINGS FOR GARAGE ROOF ELEVATIONS AND SLOPES TO DRAINS.
2. THE STRUCTURAL SLAB HAS BEEN DESIGNED FOR THE FOLLOWING LIVE LOADS (LL) AND SUPERIMPOSED DEAD LOADS (SDL) IN ADDITION TO SELF WEIGHT. AND TOPPING LOADS AS SHOWN ON PLAN.

	LL	SDL
RETAIL SPACE	4.8 kPa	1.5 kPa
LOBBY,LOUNGE,AMENITY SPACES	4.8 kPa	1.5 kPa
STAIRS	4.8 kPa	0.5 kPa
LOCKERS / STORAGE	4.8 kPa	0.5 kPa
LOADING DOCK AND MOVING ROOM	4.8 kPa	0.5 kPa
PARKING RAMP	2.4kPa	0.5kPa
RETAIL CHILLER/GARBAGE ROOM	6.0kPa	3.6kPa
LOADING RAMP	12.0kPa	0.5kPa

3. CONCRETE SHALL MEET THE REQUIREMENTS FOR CLASS C1 EXPOSURE AND SHALL HAVE A MINIMUM COMPRESSIVE STRENGTH OF 35 MPa AT 28 DAYS. REFER ALSO TO COLUMN AND WALL SCHEDULES. SEE ALSO CONCRETE MIX SCHEDULE ON FOUNDATION PLAN.
4. CONCRETE COVER FOR TOP BARS IN SLABS TO BE 25 mm, CONCRETE COVER FOR BOTTOM BARS IN SLABS TO BE 30 mm.
5. APPROVAL MUST BE OBTAINED FROM ENGINEER FOR ALL OPENINGS OTHER THAN THOSE SHOWN ON PLAN.
6. THE PROJECT SUPERINTENDENT MUST CONTACT THIS OFFICE 48 HOURS PRIOR TO PLACING STRUCTURAL CONCRETE FOR A REVIEW OF PREPARATIONS.
7. SEE TYPICAL DETAIL FOR LINTELS IN NON-LOAD BEARING MASONRY WALLS.
8. SEE ARCHITECTURAL DRAWINGS AND MECHANICAL DRAWINGS FOR CURBS, REINFORCE AS PER TYPICAL DETAIL.
9. SEE COLUMN AND WALL SCHEDULES.
10. SEE ALSO TYPICAL NOTE AND DETAIL DRAWINGS.
11. REFER TO BEAM SCHEDULES.
12. PROVIDE 25mm CHAMFER ON ALL EXPOSED EDGES OF COLUMNS, WALLS, BEAMS & DROPS.
13. WHERE BOTTOM STEEL NOT SHOWN, PROVIDE CONTINUOUS TEMPERATURE STEEL, HOOKED AT EDGE OF SLAB AND OPENINGS.
14. PROVIDE TLS FOR ALL TRANSFER SLAB REINFORCEMENT.

TLL
BUL
TUL
BLL

TUL = TOP UPPER LAYER
TLL = TOP LOWER LAYER
BUL = BOTTOM UPPER LAYER
BLL = BOTTOM LOWER LAYER

REINFORCEMENT PLACEMENT DIAGRAM

SLAB:	250 MIN. u/n	SLAB:	225 RAMP
INTEGRITY BARS:	3-20M BEW	INTEGRITY BARS:	3-20M BEW
CONCRETE STRENGTH:	35 MPa CLASS C1	CONCRETE STRENGTH:	35 MPa CLASS C1
TEMP. STEEL:	15@400 u/n	TEMP. STEEL:	15@400 u/n
SLAB:	300 MIN.	SLAB:	600 MIN.
INTEGRITY BARS:	3-20M BEW	INTEGRITY BARS:	3-20M BEW
CONCRETE STRENGTH:	35 MPa CLASS C1	CONCRETE STRENGTH:	45 MPa CLASS C1
TEMP. STEEL:	15@300 u/n	TEMP. STEEL:	20@250 u/n
SLAB:	700 MIN.	SLAB:	800 MIN.
INTEGRITY BARS:	3-30M BEW	INTEGRITY BARS:	5-30M BEW
CONCRETE STRENGTH:	45 MPa CLASS C1	CONCRETE STRENGTH:	45 MPa CLASS C1
TEMP. STEEL:	20@200 u/n	TEMP. STEEL:	25@300 u/n
SLAB:	1120 MIN.	SLAB:	1330 MIN.
INTEGRITY BARS:	5-30M BEW	INTEGRITY BARS:	5-30M BEW
CONCRETE STRENGTH:	45 MPa CLASS C1	CONCRETE STRENGTH:	45 MPa CLASS C1
TEMP. STEEL:	25@200 u/n	TEMP. STEEL:	25@200 u/n

GARAGE ROOF PLAN NOTES

1. TOP OF GARAGE ROOF SLAB ELEVATION VARIES AND IS TO BE SLOPED TO SUIT DRAINAGE AND RAMPING AS SHOWN ON THE ARCHITECTURAL DRAWINGS. SEE ARCHITECTURAL DRAWINGS.
2. THE STRUCTURAL SLAB HAS BEEN DESIGNED FOR THE FOLLOWING LIVE LOADS (LL) AND SUPERIMPOSED DEAD LOADS (SDL) IN ADDITION TO THE SELF WEIGHT.

	LL	SDL
LANSCAPED EMERGENCY VEHICLE ACCESSIBLE AREAS	12.0 kPa	21 kPa

3. CONCRETE SHALL MEET THE REQUIREMENTS FOR CLASS C1 EXPOSURE AND SHALL HAVE A MINIMUM COMPRESSIVE STRENGTH OF 35 MPa AT 28 DAYS. REFER ALSO TO COLUMN AND WALL SCHEDULES. SEE TYPICAL CONCRETE MIX SCHEDULE ON FOUNDATION PLAN.
4. CONCRETE COVER FOR TOP BARS IN SLABS TO BE 40 mm, CONCRETE COVER FOR BOTTOM BARS IN SLABS TO BE 30mm.
5. APPROVAL MUST BE OBTAINED FROM ENGINEER FOR ALL OPENINGS OTHER THAN THOSE SHOWN ON PLAN.
6. THE PROJECT SUPERINTENDENT MUST CONTACT THIS OFFICE 48 HOURS PRIOR TO PLACING STRUCTURAL CONCRETE FOR A REVIEW OF PREPARATIONS.
7. SEE TYPICAL DETAIL FOR LINTELS IN NON-LOAD BEARING MASONRY WALLS.
8. SEE ARCHITECTURAL DRAWINGS AND MECHANICAL DRAWINGS FOR CURBS, REINFORCE AS PER TYPICAL DETAIL.
9. SEE COLUMN AND WALL SCHEDULES.
10. SEE ALSO TYPICAL NOTE AND DETAIL DRAWINGS.
11. REFER TO BEAM SCHEDULES.
12. AT SLEEVES THROUGH THE SLAB, HOOK BARS AT OPENING AND ADD BARS OF SAME SIZE ON EACH SIDE OF THE OPENING, EQUAL TO 1/2 THE NUMBER OF BARS HOOKED.
13. PROVIDE 25mm CHAMFER ON ALL EXPOSED EDGES OF COLUMNS, WALLS, BEAMS, AND DROPS.
14. AREAS NOTED THUS ▨ ON PLAN, ARE BUILT-UP CONCRETE. SEE TYPICAL DETAILS.
15. AREAS NOTED THUS ▒ ON PLAN, INDICATE THICKENED SLAB: SEE PLAN FOR THICKNESS.

TRANSFER SLABS TO BE SHORED UNTIL REACH SPECIFIED 28 DAYS CONCRETE STRENGTH.

SHORING SHOULD NOT BE SUPPORTED ON BUILDING SLABS.

16. PROVIDE DCI AT A DOSAGE OF 10L/m³ CONCRETE IN THE VIA VELO, BICYCLE PARKING AREA AND RAMPS (ALL EXTERIOR AREAS).
17. SEE LANDSCAPE DRAWINGS FOR PLANTER WALLS AND PILLARS. REINFORCE AS PER TYPICAL DETAILS.
18. WHERE BOTTOM STEEL NOT SHOWN, PROVIDE CONTINUOUS TEMPERATURE STEEL, HOOKED AT EDGE OF SLAB AND OPENINGS.
19. PROVIDE TLS FOR ALL TRANSFER SLAB REINFORCEMENT.
20. IN TRANFER SLABS, HOOK BOTTOM BARS AND EXTEND ALL TOP BARS INTO ADJACENT SLABS BY 2000mm (TYP)

Contractor Must Check And Verify All Dimensions On The Job.

Do Not Scale The Drawings.

All Drawings, Specifications And Related Documents Are The Copyright Of The Architect And Must Be Returned Upon Request.

Reproduction Of Drawings, Specifications And Related Documents In Part Or Whole Is Forbidden Without The Architects Written Permission.

This Drawing Is Not To Be Used For Construction Until Signed ByThe Architect.

Date:

DEC.18,2015 DEC.18,2015

stephenson ENGINEERING
2550 Victoria Park Ave. Suite 602
Toronto ON M2J 5A9 | Tel: (416) 635 9970
www.stephenson-eng.com | info@stephenson-eng.com

No	Revision	Date

No	Issued For	Date
7	ISSUED FOR STEEL TENDER	DEC.18,2015
4	BUILDING PERMIT RESUBMISSION	SEPT.21,2015
3	BUILDING PERMIT RESUBMISSION	JULY 22,2015
2	BUILDING PERMIT SUBMISSION	JUNE 12,2015
1	ISSUED FOR WT REVIEW	MAY 01,2015

AQUAVISTA
AT BAYSIDE TORONTO

Drawing Title
LEVEL 1-GROUND FLOOR FRAMING PLAN - WITH TOP REINFORCEMENT AND DETAILS

Project
Hines TRIDEL®
AQUAVISTA
Block 3 - R3 & R4
Merchant's Whart
Toronto, ON

Scale
As indicated

Drawn by
DC

Checked by
PC/BBS

Project No.
20140031

Date
DEC.18,2015

Drawing No.
S1-06

Plot Date: 3/9/2016 9:58:46 AM

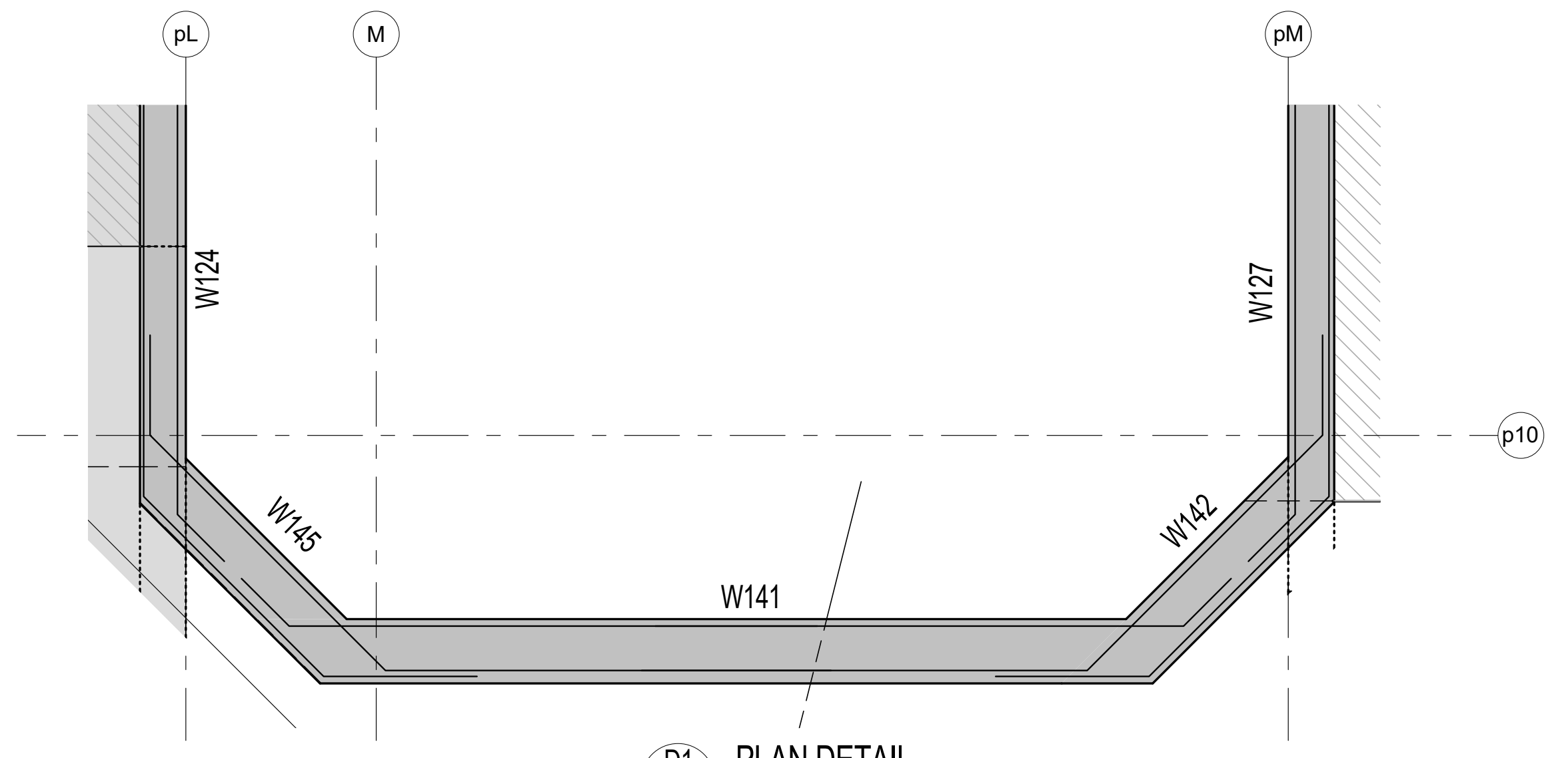
pL
M
pM
p10
W124
W127
W145
W141
W142

D1
S1-07

PLAN DETAIL
1 : 25

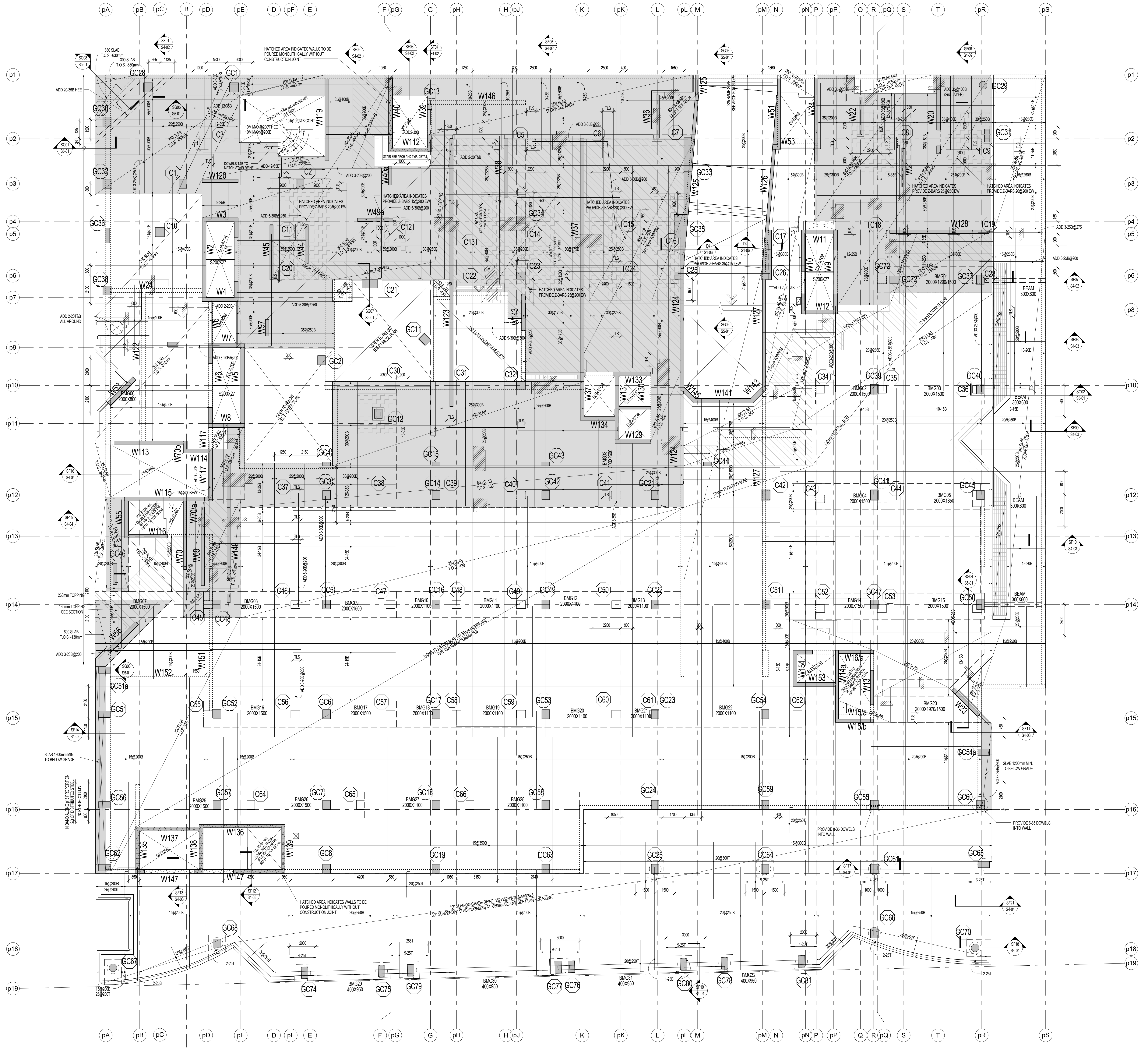
pA
pB
pC
B
pD
pE
D
pF
E
F
pG
G
pH
H
pJ
K
pK
L
pL
M
pM
N
pN
P
pP
Q
R
pQ
S
T
pR
pS
p1
p2
p3
p4
p5
p6
p7
p8
p9
p10
p11
p12
p13
p14
p15
p16
p17
p18
p19
HATCHED AREA INDICATES WALLS TO BE POURED MONOLITHICALLY WITHOUT CONSTRUCTION JOINT
PROVIDE 6-35 DOWELS INTO WALL
SLAB 1200mm MIN TO BELOW GRADE

LEVEL 1 FRAMING PLAN WITH BOTTOM REINFORCEMENT
1 : 100

REFER TO S1-06 FOR PLAN NOTES:

Contractor Must Check And Verify All Dimensions On The Job.

Do Not Scale The Drawings.

All Drawings, Specifications And Related Documents Are The Copyright Of The Architect And Must Be Returned Upon Request.

Reproduction Of Drawings, Specifications And Related Documents In Part Or Whole Is Forbidden Without The Architects Written Permission.

This Drawing Is Not To Be Used For Construction Until Signed ByThe Architect.

Date:

DEC.18,2015 DEC.18,2015

stephenson
ENGINEERING
2550 Victoria Park Ave. Suite 602
Toronto ON M2J 5A9 | Tel: (416) 635 9970
www.stephenson-eng.com | info@stephenson-eng.com

No	Revision	Date

No	Issued For	Date
7	ISSUED FOR STEEL TENDER	DEC.18,2015
4	BUILDING PERMIT RESUBMISSION	SEPT.21,2015
3	BUILDING PERMIT RESUBMISSION	JULY 22,2015
2	BUILDING PERMIT SUBMISSION	JUNE 12,2015
1	ISSUED FOR WT REVIEW	MAY 01,2015

AQUAVISTA
AT BAYSIDE TORONTO

Drawing Title
LEVEL 1-GROUND FLOOR FRAMING PLAN - WITH BOTTOM REINFORCEMENT AND SCHEDULES

Project
Hines TRIDEL®
AQUAVISTA
Block 3 - R3 & R4
Merchant's Whart
Toronto, ON

Scale
As indicated

Drawn by
Author

Checked by
PC/BBS

Project No.
20140031

Date
DEC.18,2015

Drawing No.
S1-07

Plot Date: 3/9/2016 9:58:50 AM

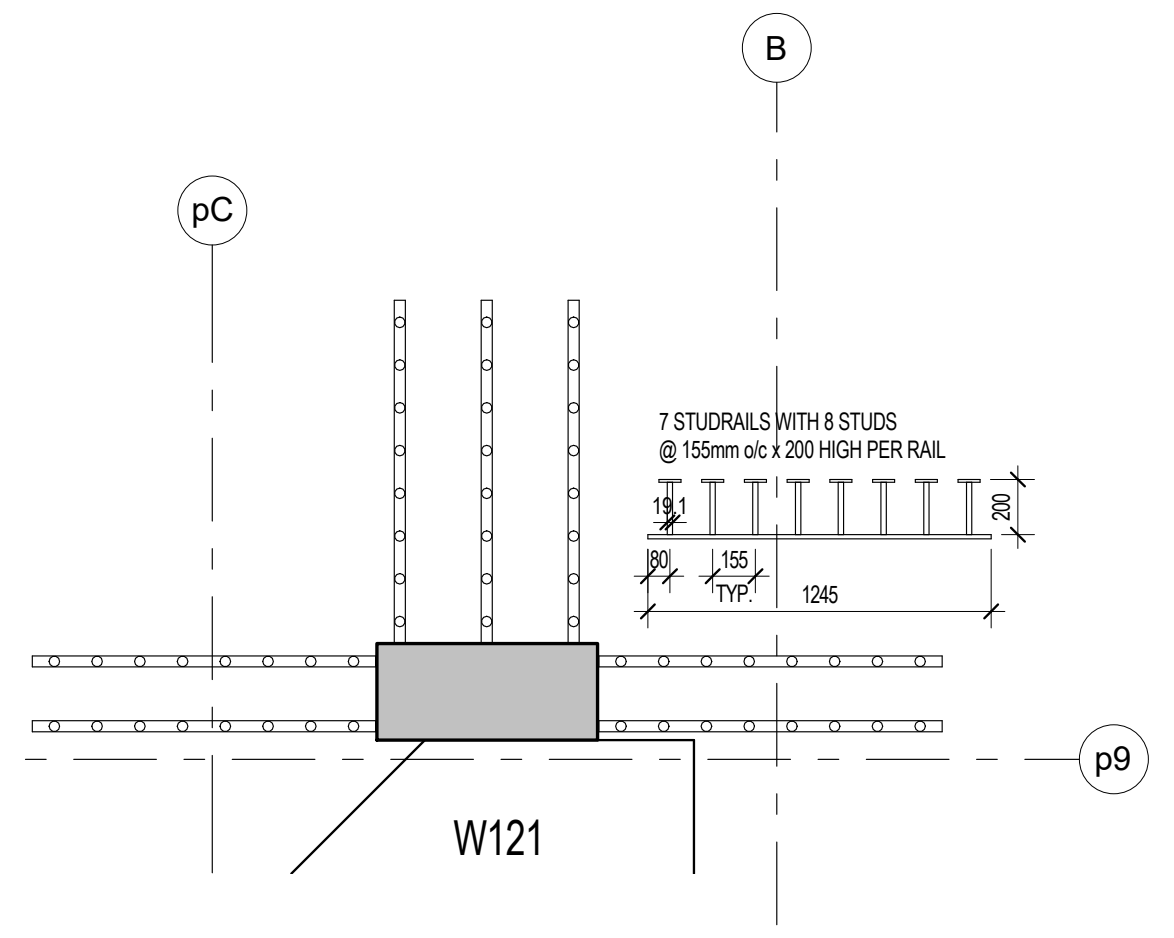
pC
B
7 STUDRAILS WITH 8 STUDS
@ 155mm o/c x 200 HIGH PER RAIL
19.1
80
155
TYP.
1245
200
p9
W121

D1 S1-08 PLAN DETAIL
1 : 25

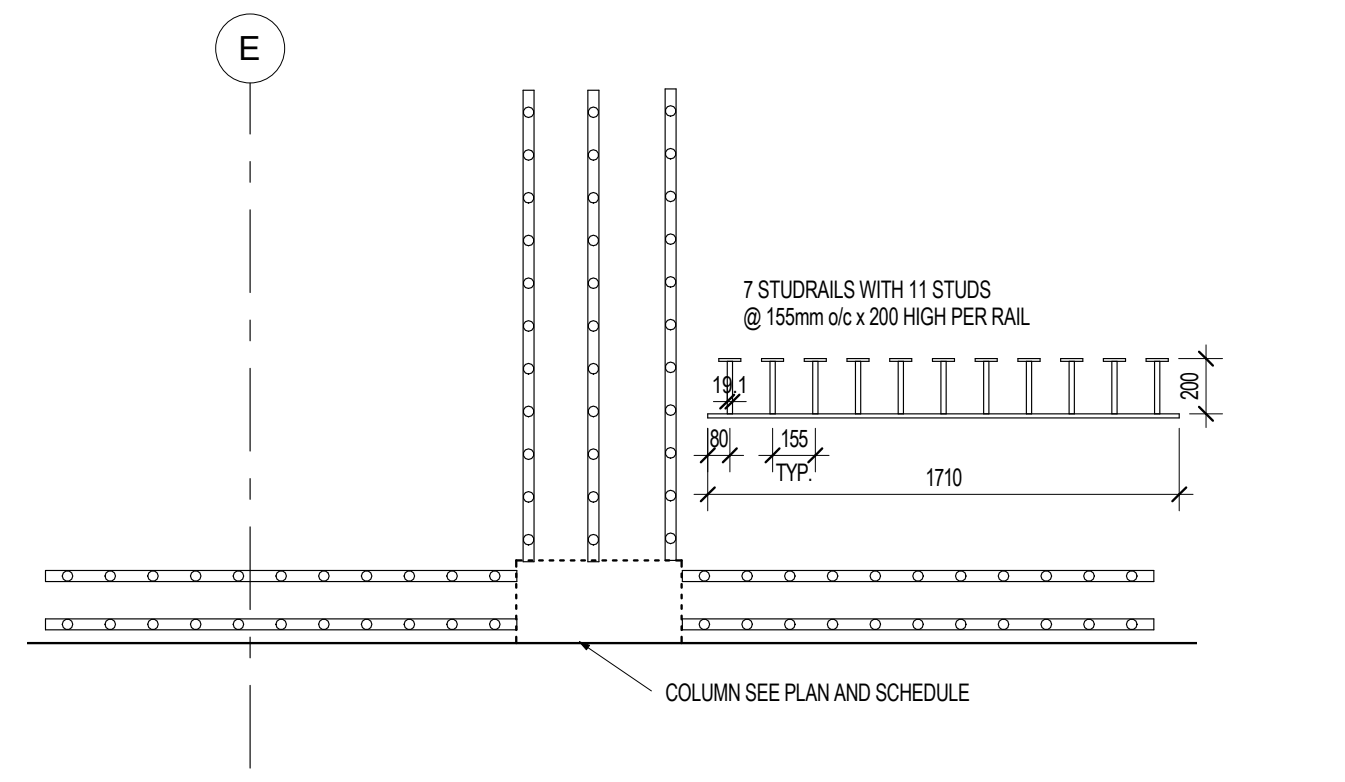
E
7 STUDRAILS WITH 11 STUDS
@ 155mm o/c x 200 HIGH PER RAIL
19.1
80
155
TYP.
1710
200
COLUMN SEE PLAN AND SCHEDULE

D2 S1-08 PLAN DETAIL
1 : 25

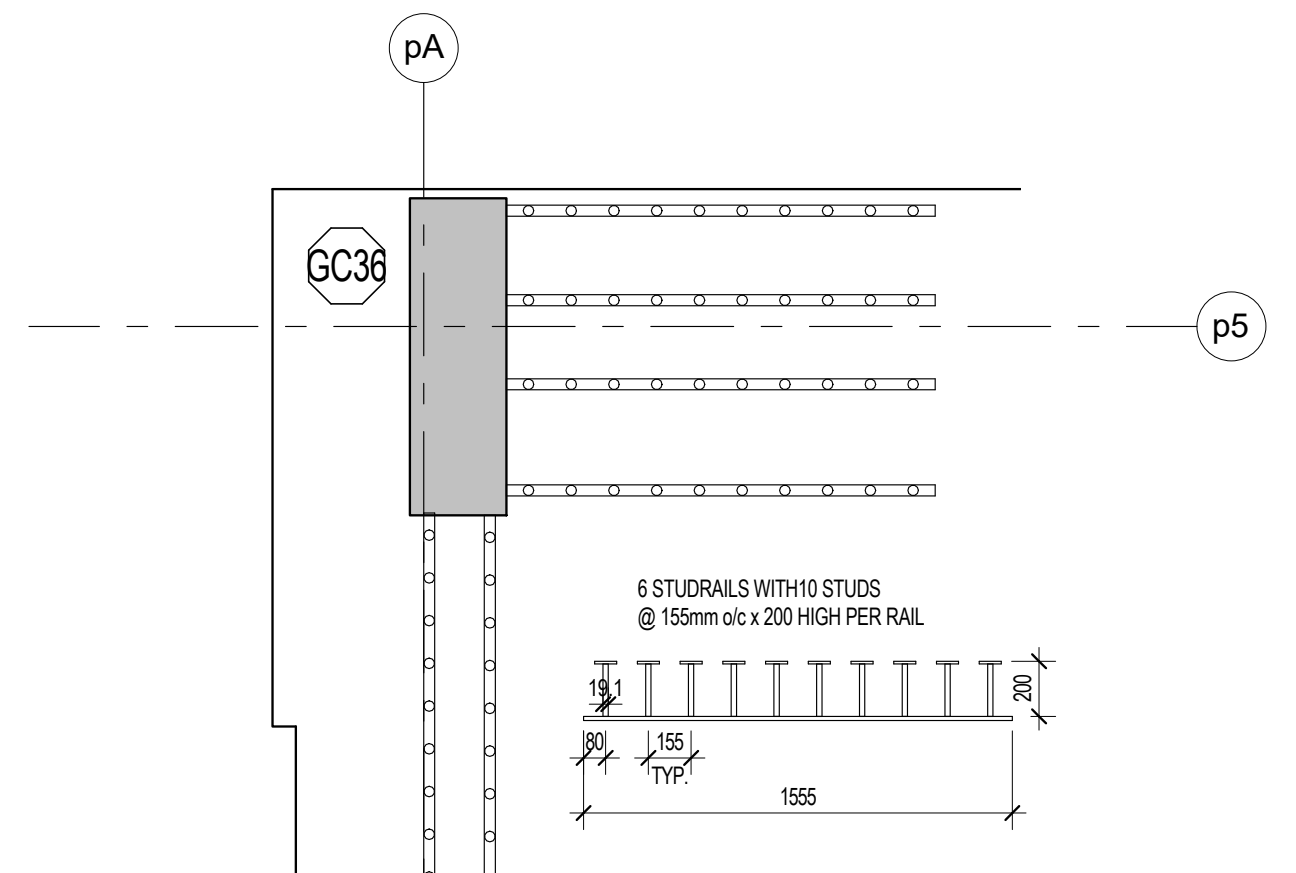
pA
GC36
p5
6 STUDRAILS WITH10 STUDS
@ 155mm o/c x 200 HIGH PER RAIL
19.1
80
155
TYP.
1555
200

D3 S1-08 PLAN DETAIL
1 : 25

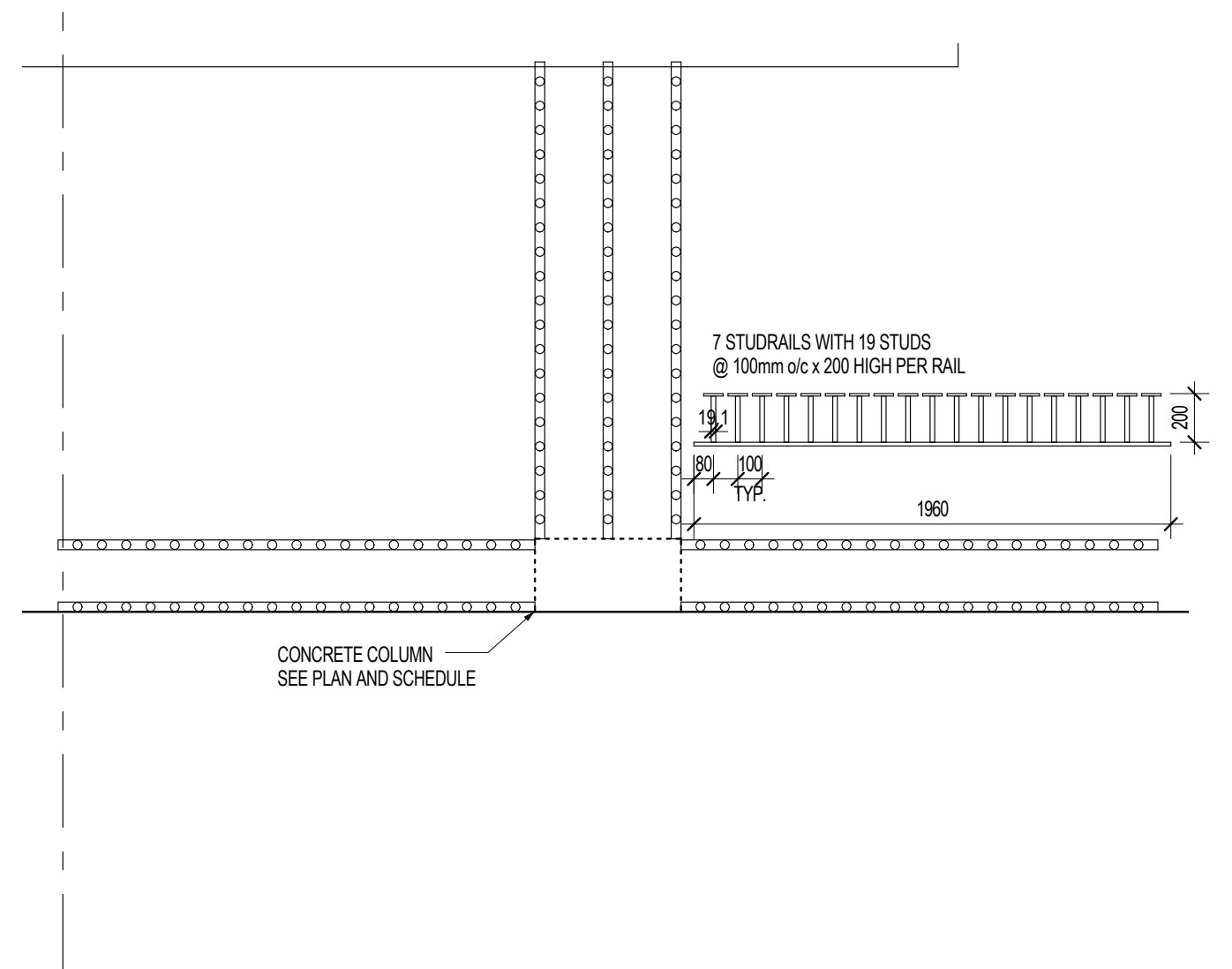
7 STUDRAILS WITH 19 STUDS
@ 100mm o/c x 200 HIGH PER RAIL
19.1
80
100
TYP.
1960
200
CONCRETE COLUMN
SEE PLAN AND SCHEDULE
pJ

D4 S1-08 PLAN DETAIL
1 : 25

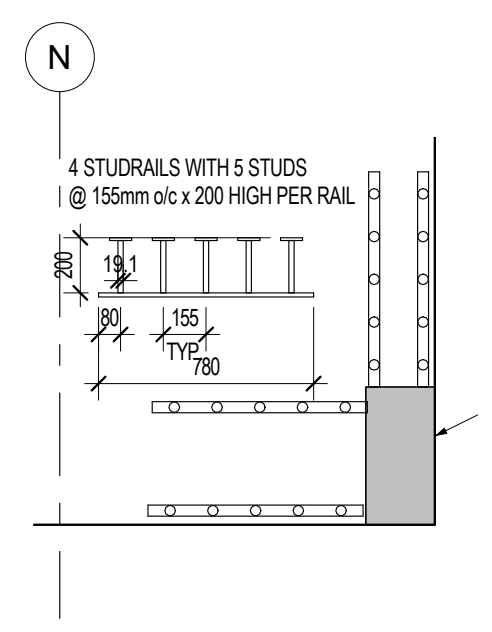
N
4 STUDRAILS WITH 5 STUDS
@ 155mm o/c x 200 HIGH PER RAIL
200
19.1
80
155
TYP.
780
CONCRETE HANGER

D5 S1-08 PLAN DETAIL
1 : 25

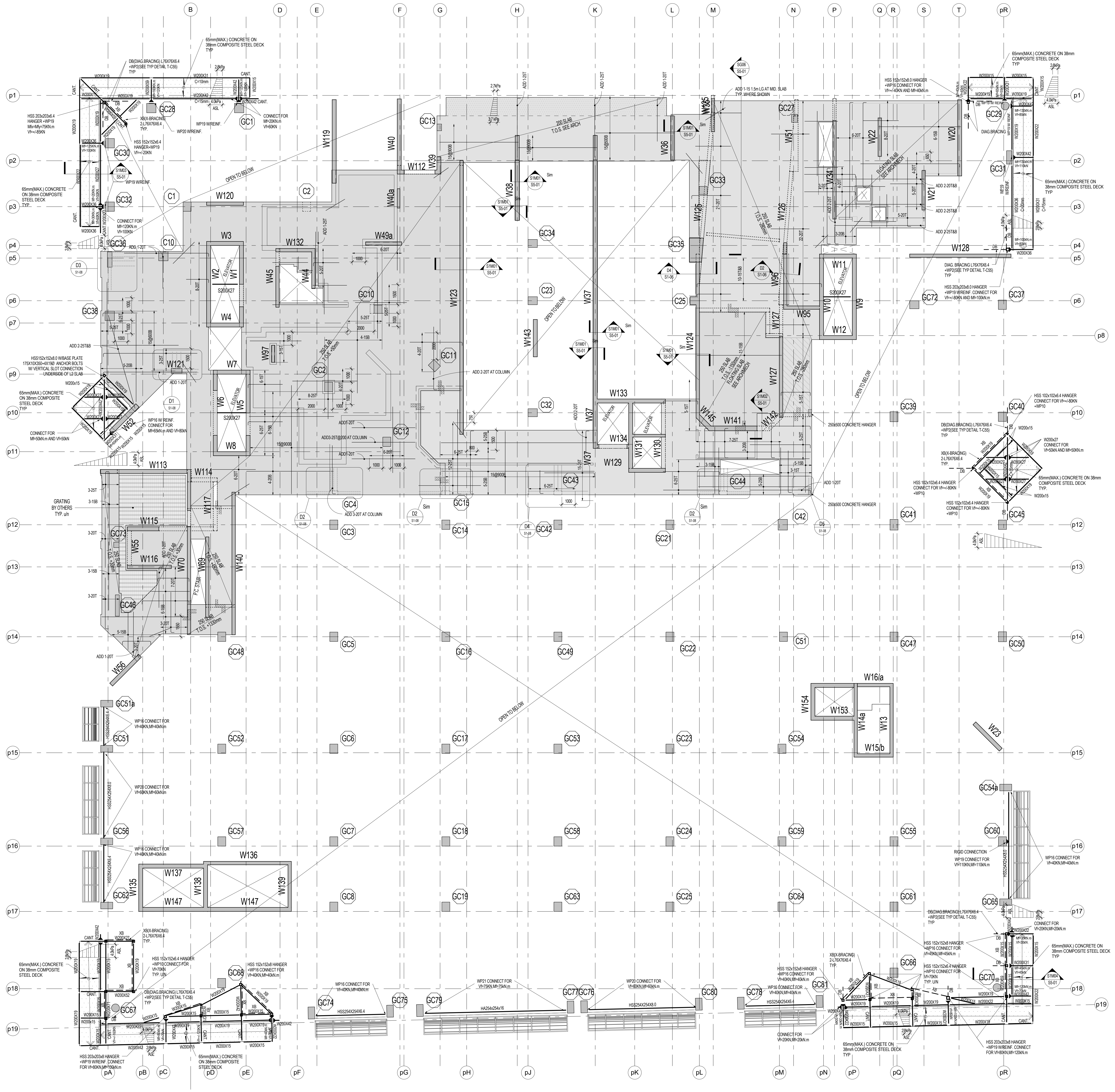
B
D
E
F
G
H
K
L
M
N
P
Q
R
S
T
pR
p1
p2
p3
p4
p5
p6
p7
p8
p9
p10
p11
p12
p13
p14
p15
p16
p17
p18
p19
pA
pB
pC
pD
pE
pF
pG
pH
pJ
pK
pL
pM
pN
pP
pQ
OPEN TO BELOW
W120
W113
W114
W115
W116
W117
W136
W137
W138
W139
W147
W133
W134
W129
W141
W128
W153
GC1
GC3
GC4
GC5
GC8
GC10
GC11
GC12
GC13
GC14
GC15
GC16
GC17
GC18
GC19
GC21
GC22
GC23
GC24
GC25
GC27
GC28
GC29
GC30
GC31
GC32
GC33
GC34
GC35
GC36
GC37
GC38
GC39
GC40
GC41
GC42
GC43
GC44
GC45
GC47
GC48
GC49
GC50
GC51
GC52
GC53
GC54
GC55
GC56
GC57
GC59
GC60
GC61
GC62
GC63
GC64
GC65
GC66
GC67
GC68
GC70
GC73
GC74
GC75
GC76
GC77
GC78
GC79
GC80
GC81
65mm(MAX.) CONCRETE ON 38mm COMPOSITE STEEL DECK
250x600 CONCRETE HANGER

LEVEL 1 MEZZ. FRAMING PLAN
1 : 100

1. TOP OF L1 MEZZ. FLOOR STRUCTURAL SLAB VARIES FROM FINISHED L1 MEZZ FLOOR DATUM ELEVATION 80.220m. SEE ALSO ARCHITECTURAL DRAWINGS.
2. THE STRUCTURAL SLAB HAS BEEN DESIGNED FOR THE FOLLOWING LIVE LOADS (LL) AND SUPERIMPOSED DEAD LOADS (SDL) IN ADDITION TO SELF WEIGHT.

	LL	SDL
STAIRS	4.8 kPa	0.5 kPa
MEZZ. FLOOR	4.8 kPa	4.8 kPa
CANOPY	1.28 kPa+ASL	1.2 kPa

3. CONCRETE SHALL HAVE A MINIMUM COMPRESSIVE STRENGTH OF 35 MPa AT 28 DAYS. SEE ALSO CONCRETE MIX SCHEDULE ON FOUNDATION PLAN.
4. CONCRETE COVER FOR TOP BARS IN SLABS TO BE 25 mm, CONCRETE COVER FOR BOTTOM BARS IN SLABS TO BE 25 mm.
5. APPROVAL MUST BE OBTAINED FROM ENGINEER FOR ALL OPENINGS OTHER THAN THOSE SHOWN ON PLAN.
6. THE PROJECT SUPERINTENDENT MUST CONTACT THIS OFFICE 48 HOURS PRIOR TO PLACING STRUCTURAL CONCRETE FOR A REVIEW OF PREPARATIONS.
7. SEE TYPICAL DETAIL FOR LINTELS IN NON-LOAD BEARING MASONRY WALLS.
8. SEE ARCHITECTURAL DRAWINGS AND MECHANICAL DRAWINGS FOR CURBS, REINFORCE AS PER TYPICAL DETAIL.
9. SEE COLUMN AND BEAM SCHEDULES, WALL ELEVATIONS.
10. SEE ALSO TYPICAL NOTE AND DETAIL DRAWINGS.
11. PROVIDE 25mm CHAMFER ON ALL EXPOSED EDGES OF COLUMNS, WALLS, BEAMS TOP AND BOTTOM & DROPS.
12. PROVIDE CONTINUOUS TEMPERATURE STEEL TOP AND BOTTOM, HOOKED AT EDGE OF SLAB AND OPENINGS, IN ADDITION TO REINFORCEMENT SHOWN ON PLAN.
13. PROVIDE TLS FOR ALL SLAB REINFORCEMENT.

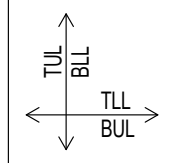
TUL
BLL
TLL
BUL

TUL = TOP UPPER LAYER
TLL = TOP LOWER LAYER
BUL = BOTTOM UPPER LAYER
BLL = BOTTOM LOWER LAYER

REINFORCEMENT PLACEMENT DIAGRAM

SLAB:	200 MIN. u/n
INTEGRITY BARS:	3-20M BEW
CONCRETE STRENGTH:	35 MPa
TEMPERATURE STEEL	
TOP STEEL:	20@200 TEW u/n
BOTTOM STEEL:	15@300 BEW u/n
SLAB:	250 MIN. u/n
INTEGRITY BARS:	3-20M BEW
CONCRETE STRENGTH:	35 MPa
TEMPERATURE STEEL	
TOP STEEL:	15@400 TEW u/n
BOTTOM STEEL:	15@300 BEW u/n

SEE PLAN FOR ADDITIONAL REINFORCEMENT

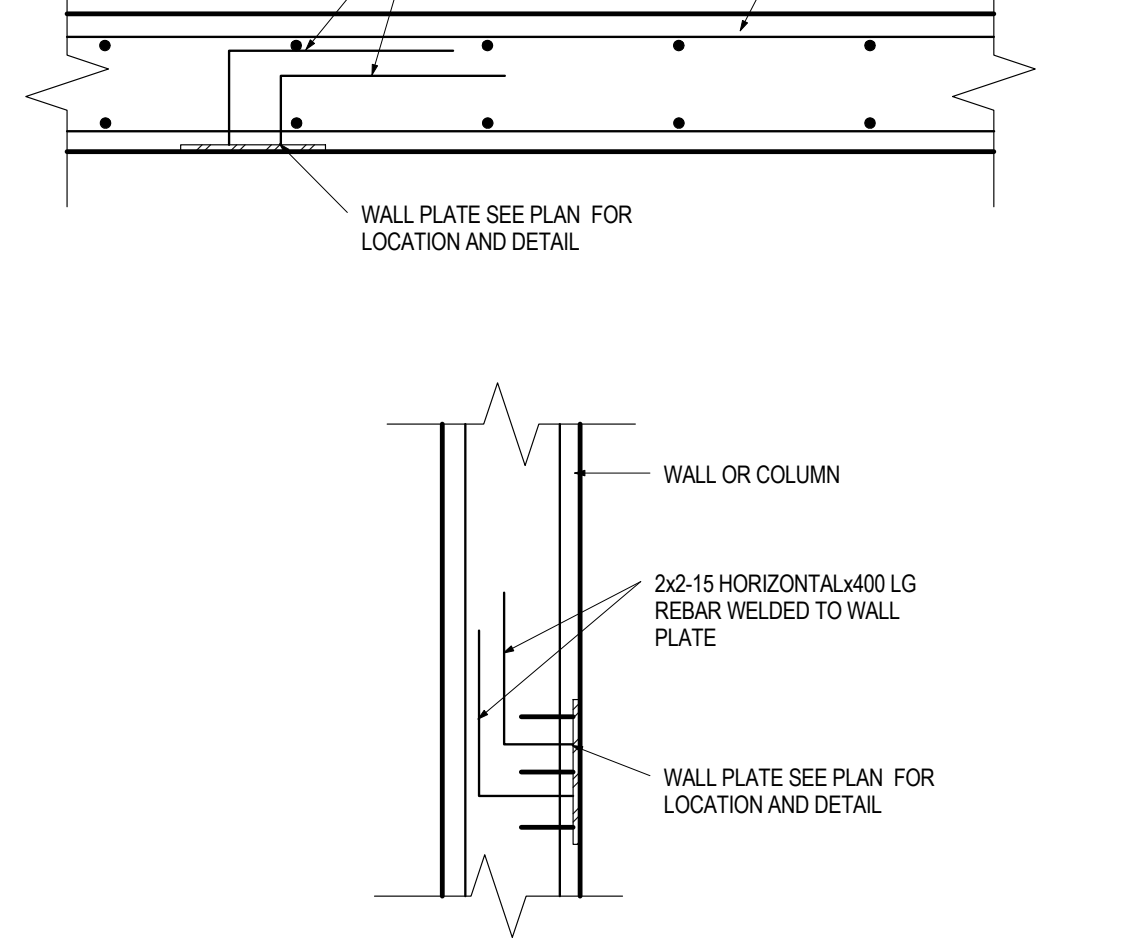
2x2-15x400 LG REBAR WELDED
TO WALL PLATE
SEE PLAN FOR SLAB REINF.
WALL PLATE SEE PLAN FOR
LOCATION AND DETAIL
WALL OR COLUMN
2x2-15 HORIZONTALx400 LG
REBAR WELDED TO WALL
PLATE
WALL PLATE SEE PLAN FOR
LOCATION AND DETAIL

WALL PLATE WITH REINFORCEMENT

Contractor Must Check And Verify All Dimensions On The Job.

Do Not Scale The Drawings.

All Drawings, Specifications And Related Documents Are The Copyright Of The Architect And Must Be Returned Upon Request.

Reproduction Of Drawings, Specifications And Related Documents In Part Or Whole Is Forbidden Without The Architects Written Permission.

This Drawing Is Not To Be Used For Construction Until Signed ByThe Architect.

Date:

DEC.18,2015 DEC.18,2015

stephenson
ENGINEERING
2550 Victoria Park Ave. Suite 602
Toronto ON M2J 5A9 | Tel: (416) 635 9970
www.stephenson-eng.com | info@stephenson-eng.com

No	Revision	Date

No	Issued For	Date
7	ISSUED FOR STEEL TENDER	DEC.18,2015
4	BUILDING PERMIT RESUBMISSION	SEPT.21,2015
3	BUILDING PERMIT RESUBMISSION	JULY 22,2015
2	BUILDING PERMIT SUBMISSION	JUNE 12,2015
1	ISSUED FOR WT REVIEW	MAY 01,2015

AQUAVISTA
AT BAYSIDE TORONTO

Drawing Title
LEVEL L1 MEZZANINE
FRAMING PLAN

Project
Hines TRIDEL®
AQUAVISTA
Block 3 - R3 & R4
Merchant's Whart
Toronto, ON

Scale
As indicated
Drawn by
Author
Checked by
IA/BBS
Project No.
20140031
Date
DEC.18,2015
Drawing No.
S1-08

Plot Date: 3/9/2016 9:58:54 AM

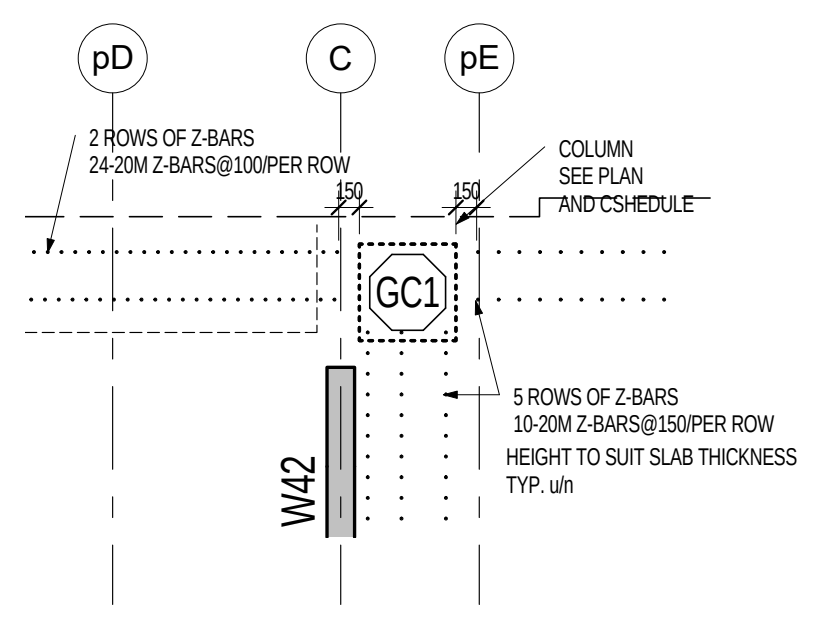
pD
C
pE
2 ROWS OF Z-BARS
24-20M Z-BARS@100/PER ROW
150
150
COLUMN
SEE PLAN
AND CSHEDULE
GC1
W42
5 ROWS OF Z-BARS
10-20M Z-BARS@150/PER ROW
HEIGHT TO SUIT SLAB THICKNESS
TYP. u/n

D1 PLAN DETAIL S1-09 1 : 50

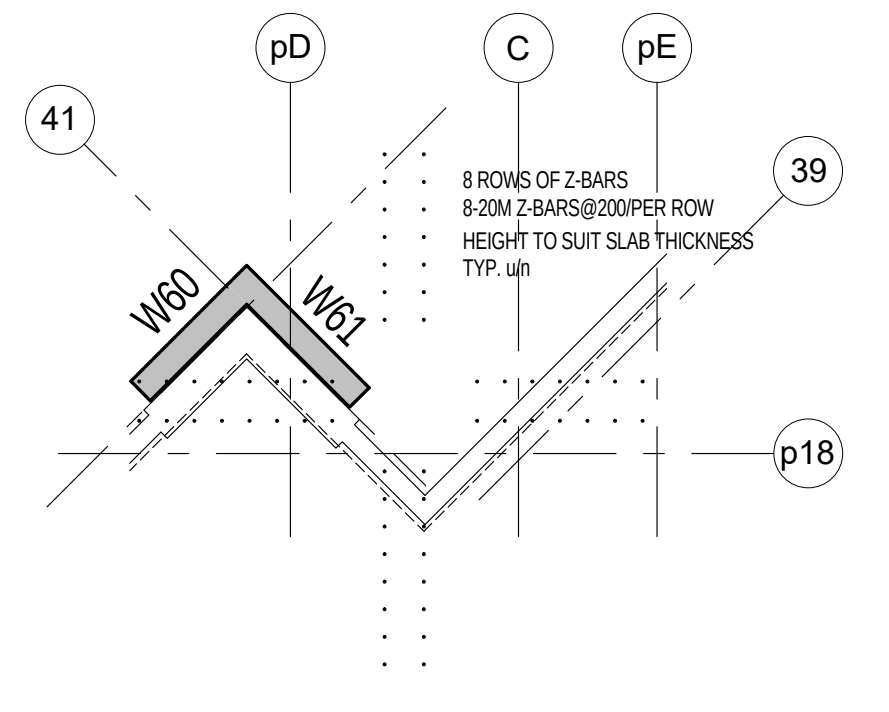
41
pD
C
pE
39
W60
W61
8 ROWS OF Z-BARS
8-20M Z-BARS@200/PER ROW
HEIGHT TO SUIT SLAB THICKNESS
TYP. u/n
p18

D2 PLAN DETAIL S1-09 1 : 50

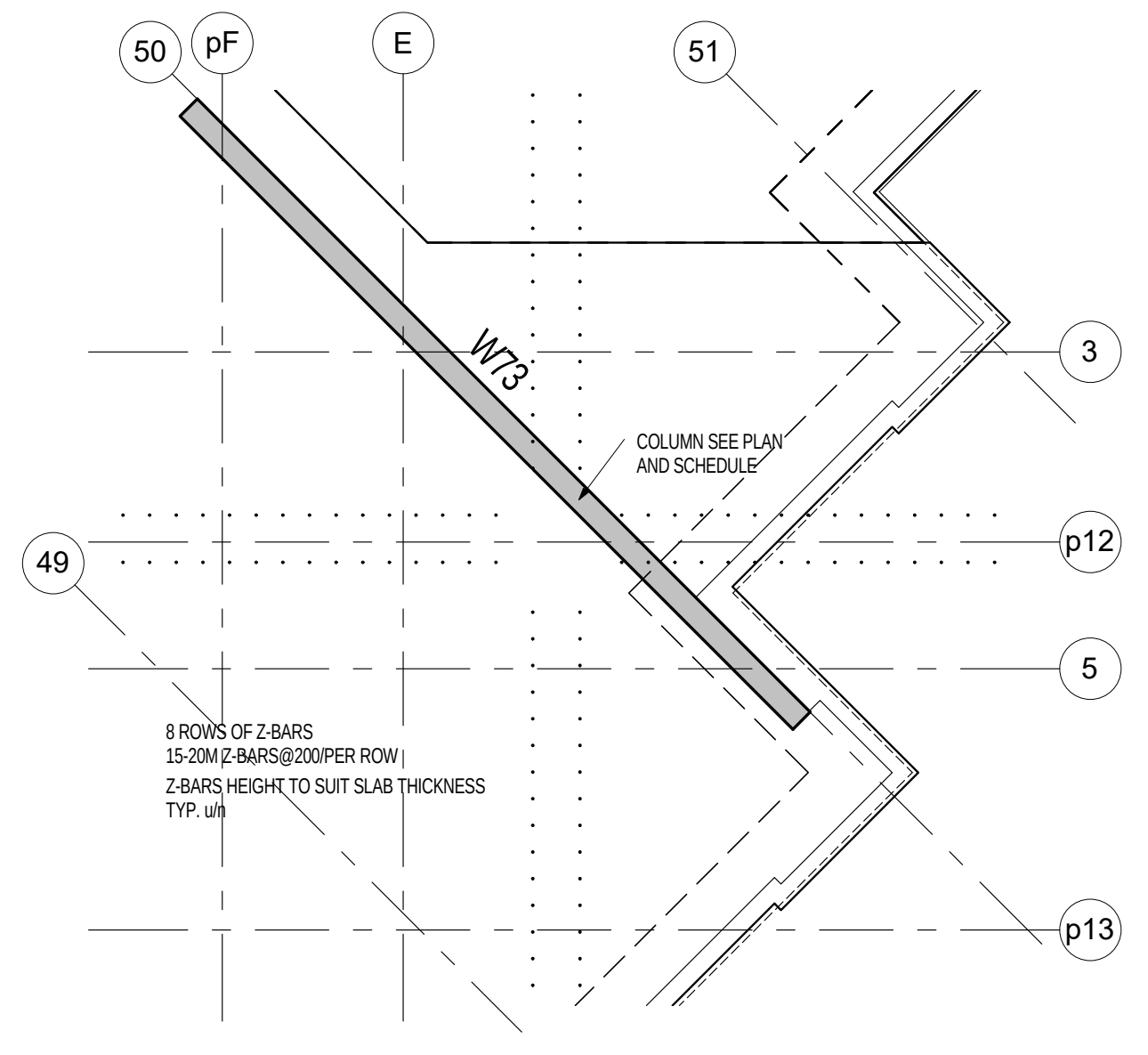
50
pF
E
51
W73
COLUMN SEE PLAN
AND SCHEDULE
3
p12
5
p13
49
8 ROWS OF Z-BARS
15-20M Z-BARS@200/PER ROW
Z-BARS HEIGHT TO SUIT SLAB THICKNESS
TYP. u/n

D3 PLAN DETAIL S1-09 1 : 50

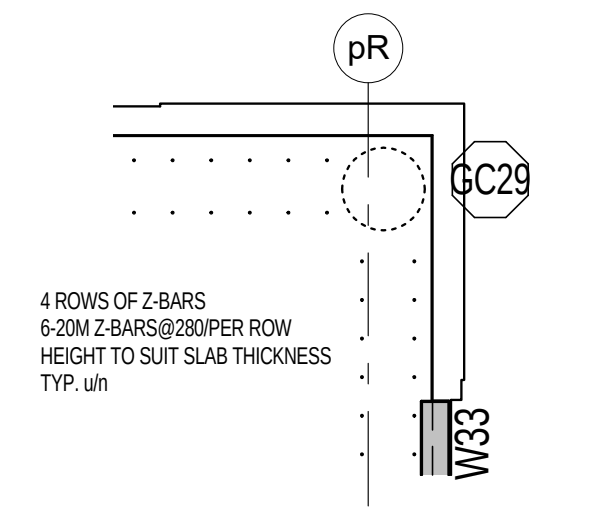
pR
GC29
4 ROWS OF Z-BARS
6-20M Z-BARS@280/PER ROW
HEIGHT TO SUIT SLAB THICKNESS
TYP. u/n
W33

D4 PLAN DETAIL S1-09 1 : 50

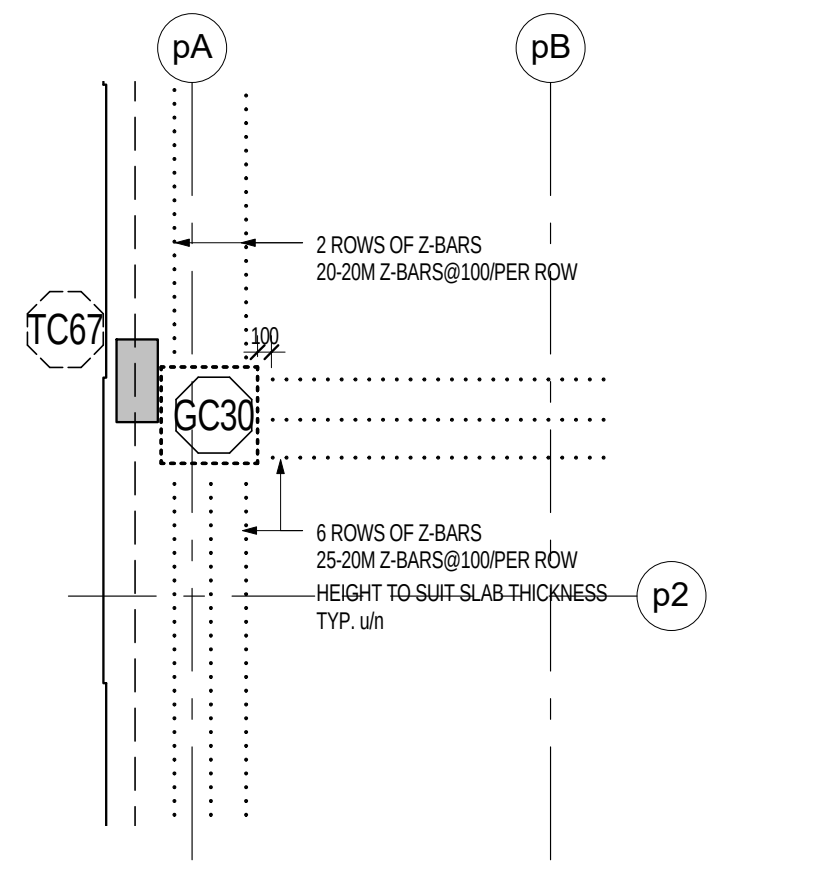
pA
pB
2 ROWS OF Z-BARS
20-20M Z-BARS@100/PER ROW
TC67
100
GC30
6 ROWS OF Z-BARS
25-20M Z-BARS@100/PER ROW
HEIGHT TO SUIT SLAB THICKNESS
TYP. u/n
p2

D5 PLAN DETAIL S1-09 1 : 50

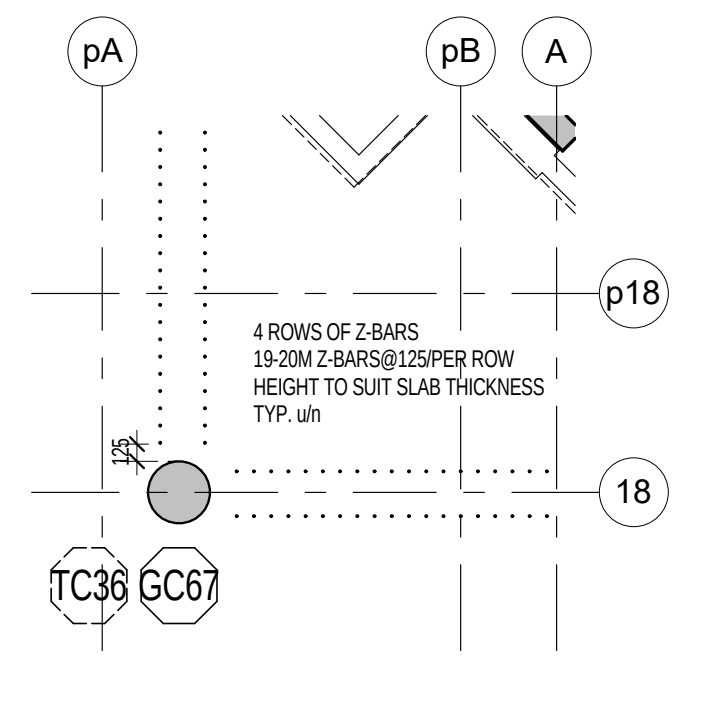
pA
pB
A
p18
4 ROWS OF Z-BARS
19-20M Z-BARS@125/PER ROW
HEIGHT TO SUIT SLAB THICKNESS
TYP. u/n
125
18
TC36
GC67

D6 PLAN DETAIL S1-09 1 : 50

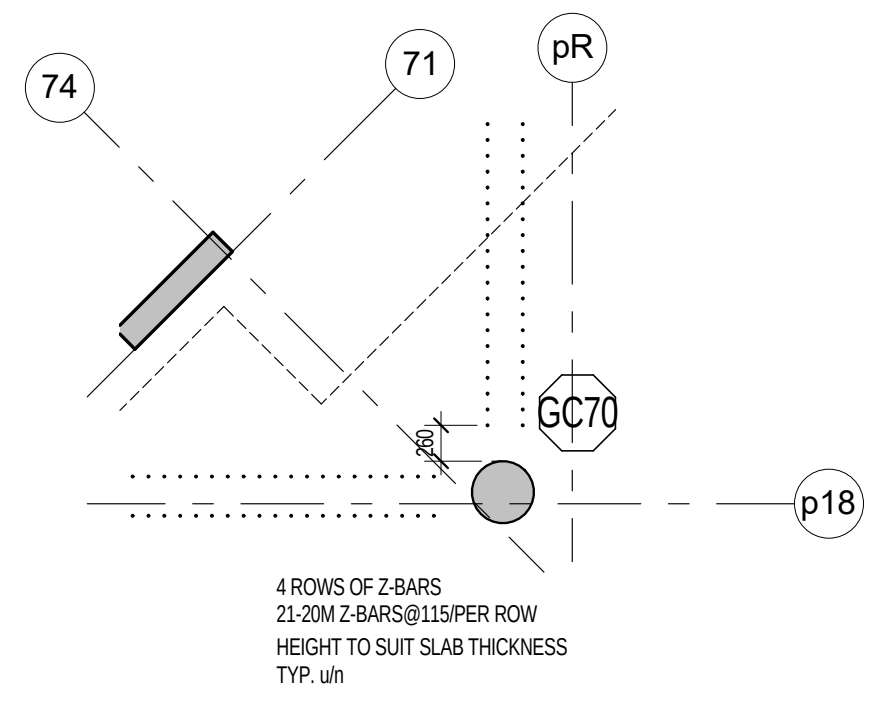
74
71
pR
260
GC70
p18
4 ROWS OF Z-BARS
21-20M Z-BARS@115/PER ROW
HEIGHT TO SUIT SLAB THICKNESS
TYP. u/n

D7 PLAN DETAIL S1-09 1 : 50

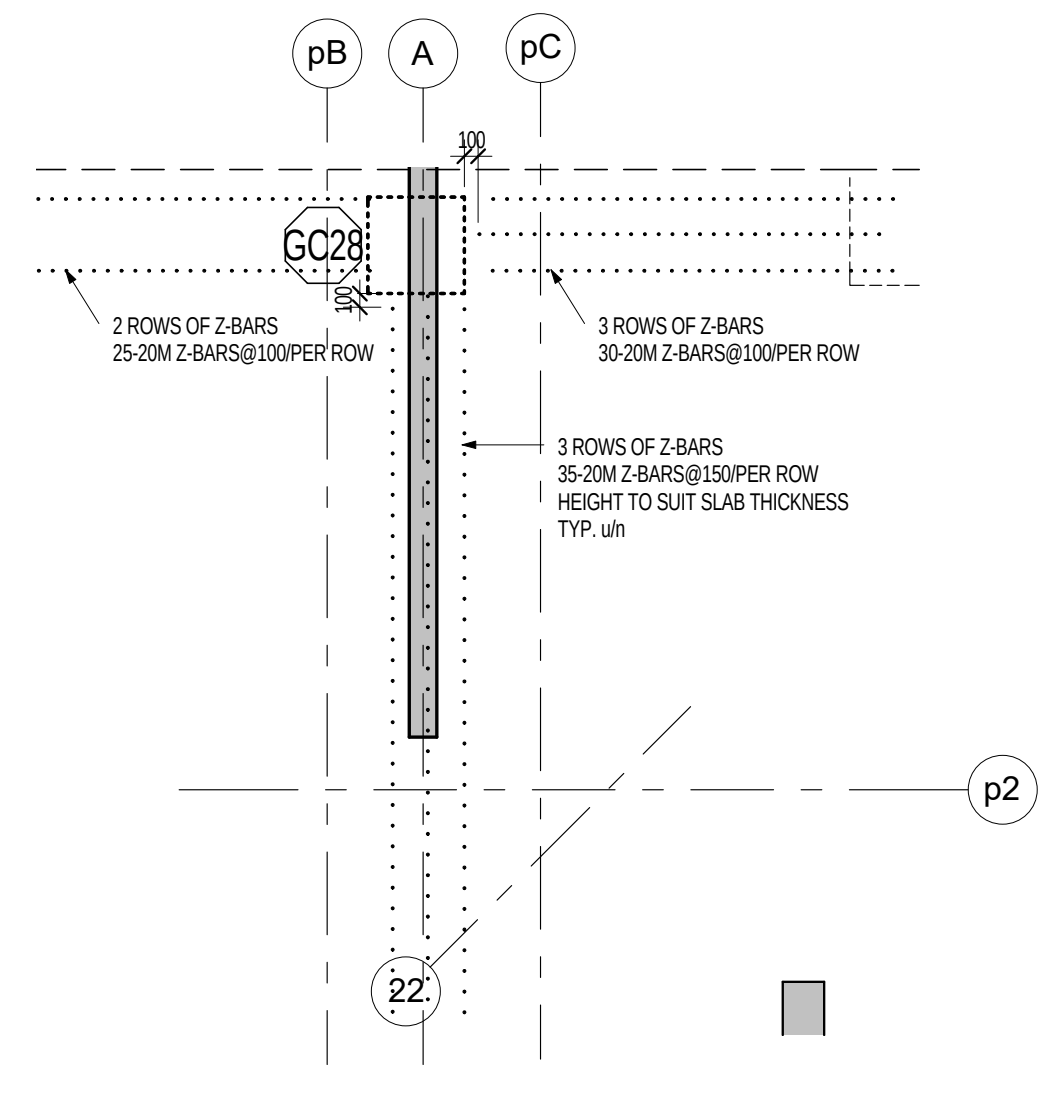
pB
A
pC
100
GC28
100
2 ROWS OF Z-BARS
25-20M Z-BARS@100/PER ROW
3 ROWS OF Z-BARS
30-20M Z-BARS@100/PER ROW
3 ROWS OF Z-BARS
35-20M Z-BARS@150/PER ROW
HEIGHT TO SUIT SLAB THICKNESS
TYP. u/n
p2
22

D8 PLAN DETAIL S1-09 1 : 50

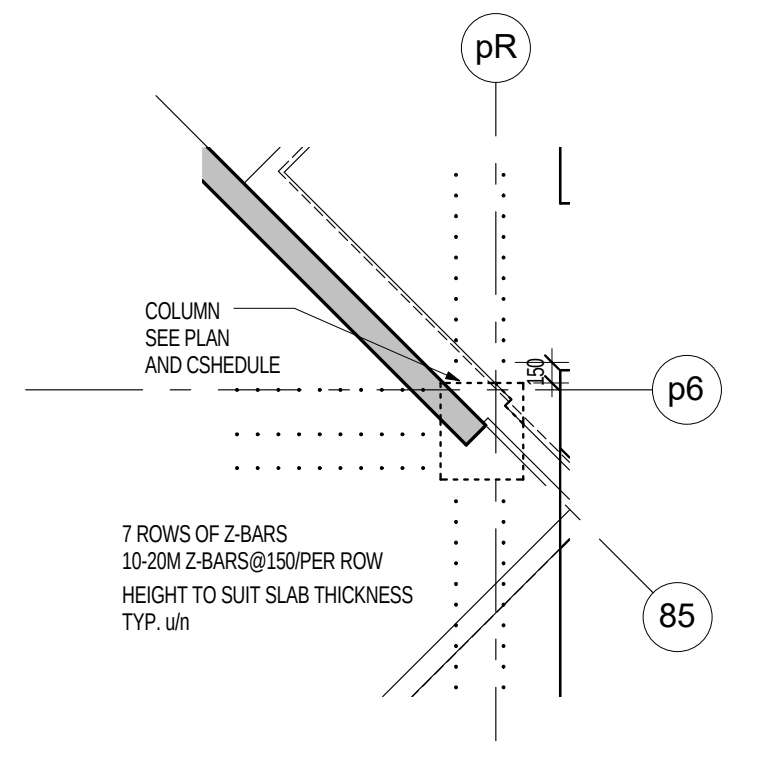
pR
COLUMN
SEE PLAN
AND CSHEDULE
150
p6
7 ROWS OF Z-BARS
10-20M Z-BARS@150/PER ROW
HEIGHT TO SUIT SLAB THICKNESS
TYP. u/n
85

D9 PLAN DETAIL S1-09 1 : 50

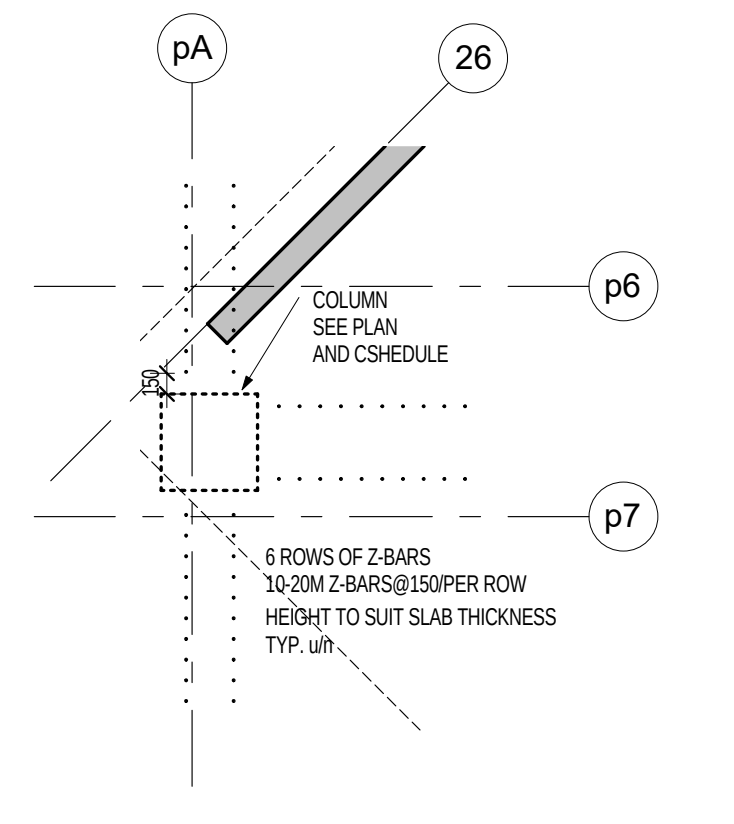
pA
26
COLUMN
SEE PLAN
AND CSHEDULE
p6
150
p7
6 ROWS OF Z-BARS
10-20M Z-BARS@150/PER ROW
HEIGHT TO SUIT SLAB THICKNESS
TYP. u/n

D10 PLAN DETAIL S1-09 1 : 50

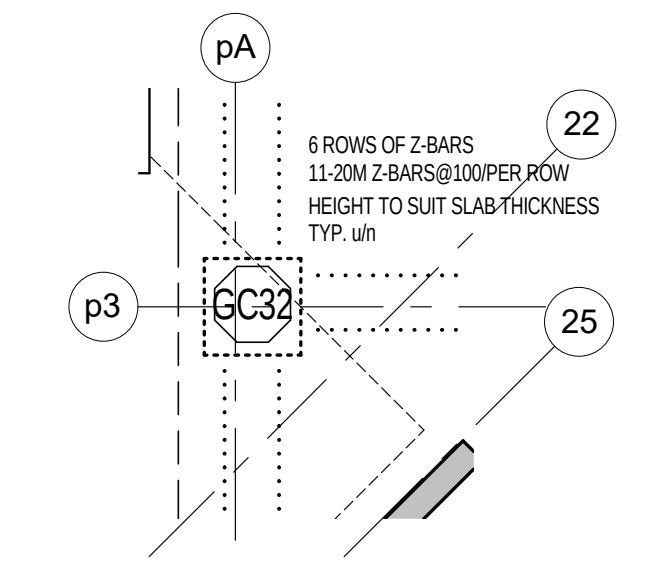
pA
6 ROWS OF Z-BARS
11-20M Z-BARS@100/PER ROW
HEIGHT TO SUIT SLAB THICKNESS
TYP. u/n
22
p3
GC32
25

D11 PLAN DETAIL S1-09 1 : 50

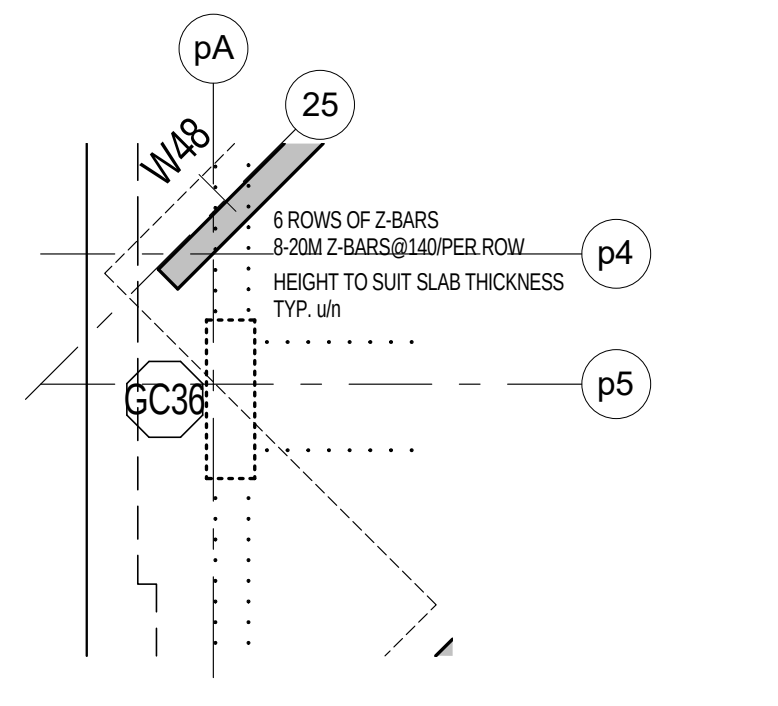
pA
25
W48
6 ROWS OF Z-BARS
8-20M Z-BARS@140/PER ROW
HEIGHT TO SUIT SLAB THICKNESS
TYP. u/n
p4
GC36
p5

D12 PLAN DETAIL S1-09 1 : 50

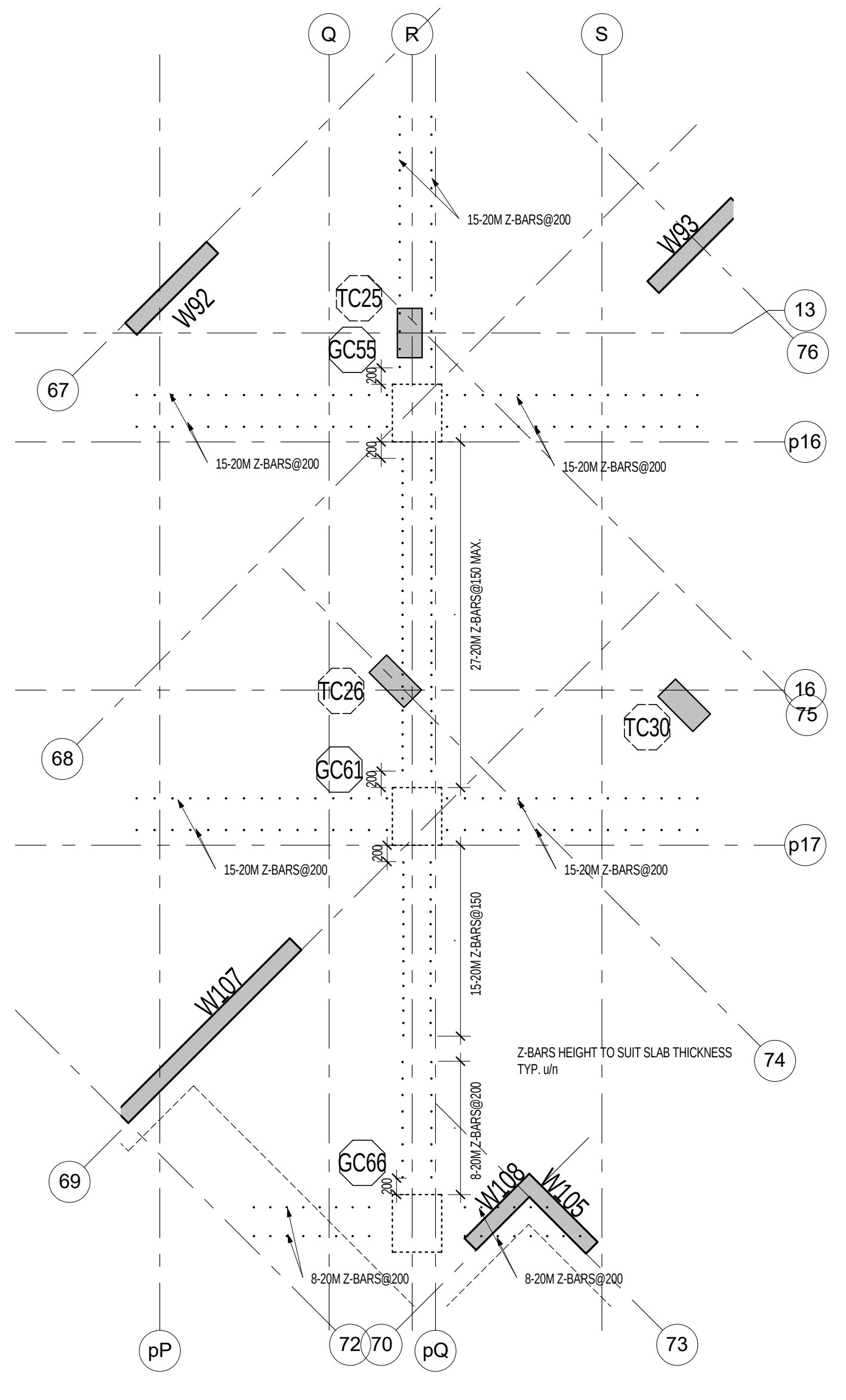
Q
R
S
15-20M Z-BARS@200
W92
W93
TC25
GC55
13
76
67
200
15-20M Z-BARS@200
p16
27-20M Z-BARS@150 MAX.
TC26
TC30
16
75
68
GC61
15-20M Z-BARS@200
p17
15-20M Z-BARS@150
W107
Z-BARS HEIGHT TO SUIT SLAB THICKNESS
TYP. u/n
74
8-20M Z-BARS@200
GC66
W108
W105
69
8-20M Z-BARS@200
pP
72
70
pQ
73

D13 PLAN DETAIL S1-09 1 : 50

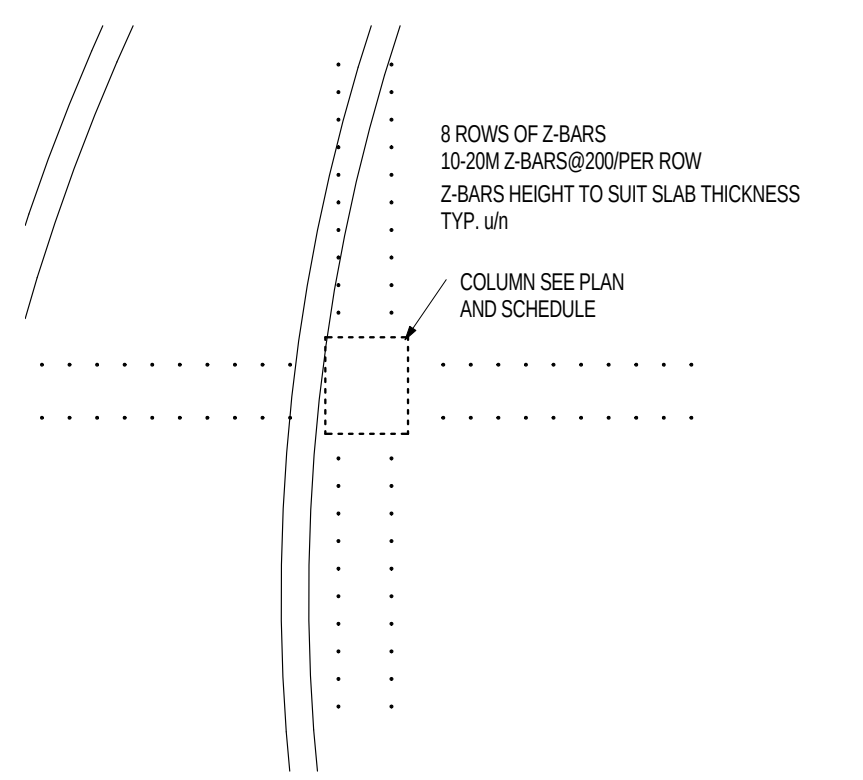
8 ROWS OF Z-BARS
10-20M Z-BARS@200/PER ROW
Z-BARS HEIGHT TO SUIT SLAB THICKNESS
TYP. u/n
COLUMN SEE PLAN
AND SCHEDULE

D14 PLAN DETAIL S1-09 1 : 50

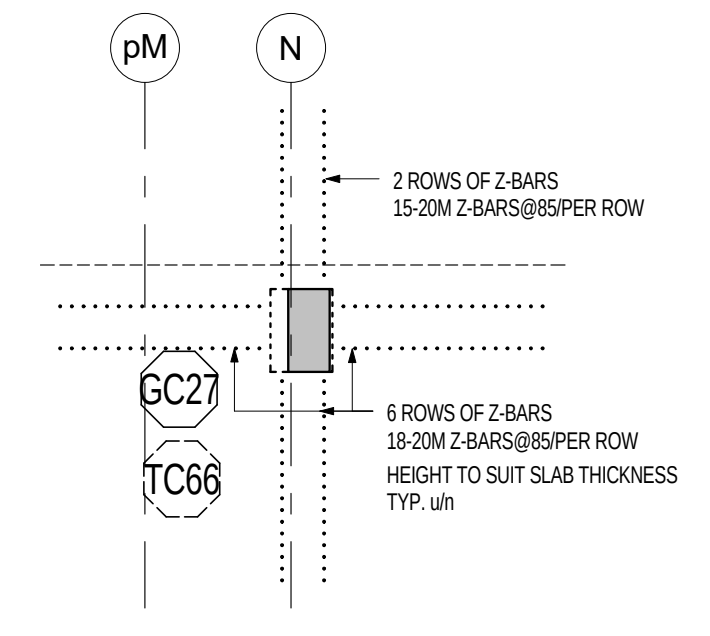
pM
N
2 ROWS OF Z-BARS
15-20M Z-BARS@85/PER ROW
GC27
TC66
6 ROWS OF Z-BARS
18-20M Z-BARS@85/PER ROW
HEIGHT TO SUIT SLAB THICKNESS
TYP. u/n

D15 PLAN DETAIL S1-09 1 : 50

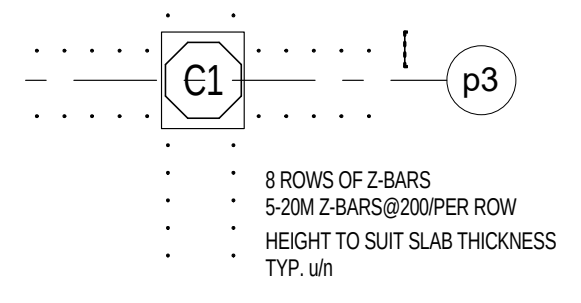
C1
p3
8 ROWS OF Z-BARS
5-20M Z-BARS@200/PER ROW
HEIGHT TO SUIT SLAB THICKNESS
TYP. u/n

D16 PLAN DETAIL S1-09 1 : 50

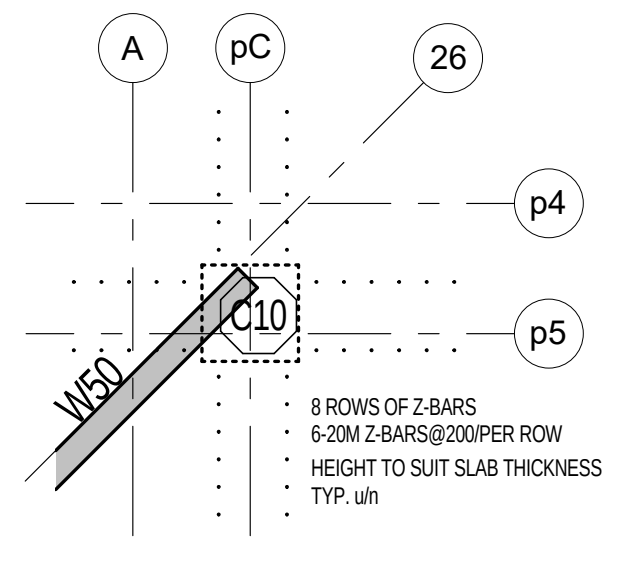
A
pC
26
p4
C10
p5
W50
8 ROWS OF Z-BARS
6-20M Z-BARS@200/PER ROW
HEIGHT TO SUIT SLAB THICKNESS
TYP. u/n

D17 PLAN DETAIL S1-09 1 : 50

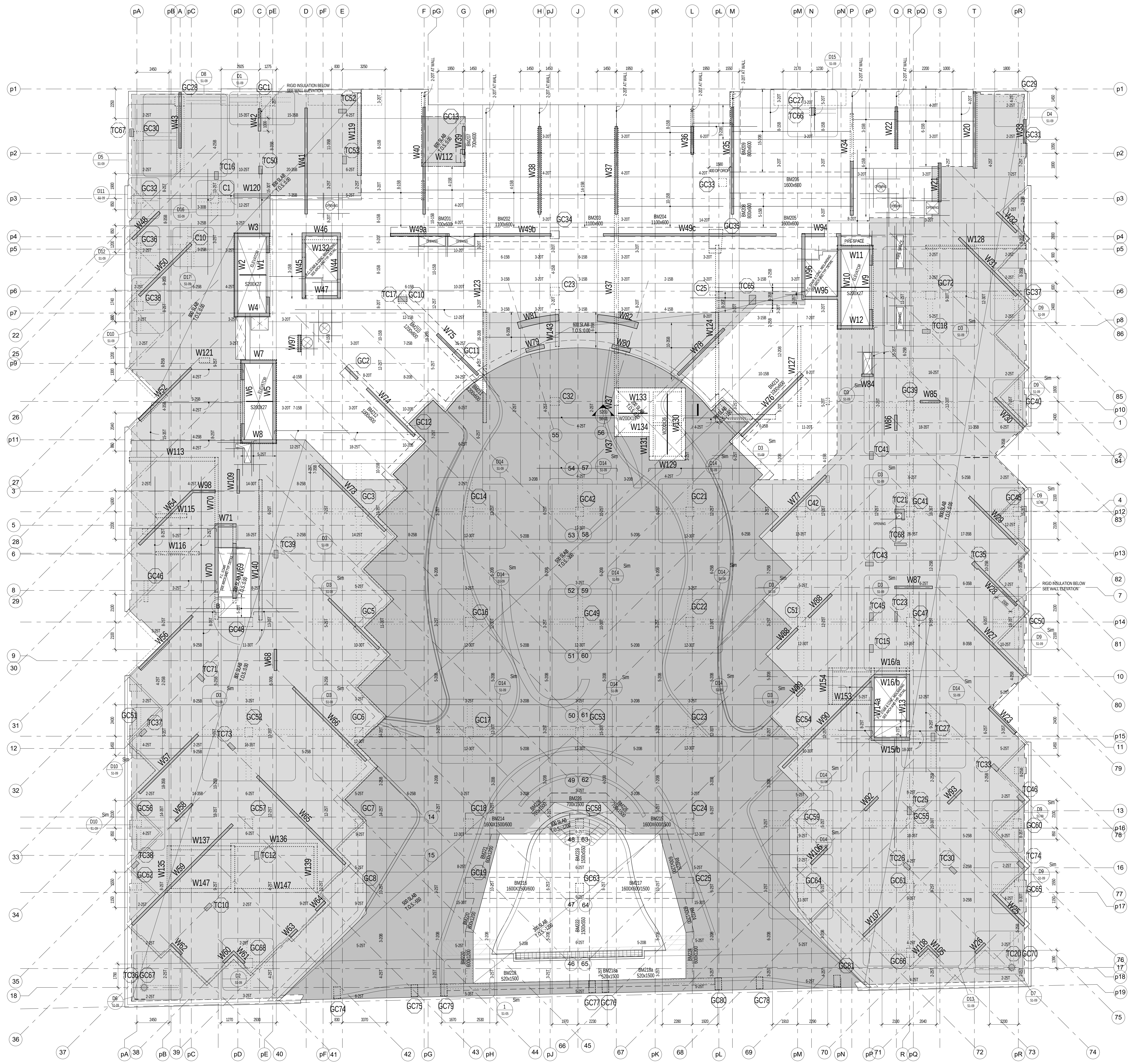

LEVEL 2 FRAMING PLAN

1 : 100

1. TOP OF STRUCTURAL SLAB TO BE 0.0 mm BELOW FINISHED FLOOR DATUM ELEVATION EXCEPT AS CROSSED AND NOTED. SEE ARCHITECTURAL DRAWINGS FOR DATUM ELEVATION.
2. THE STRUCTURAL SLAB HAS BEEN DESIGNED FOR THE FOLLOWING LIVE LOADS (LL) AND SUPERIMPOSED DEAD LOADS (SDL) IN ADDITION TO THE SELF WEIGHT.

	LL	SDL
SUITES	1.9 kPa	1.25 kPa
TERRACE	4.8 kPa**	3.6 kPa*
STAIRS/BALCONIES/HALL/LOBBY	4.8 kPa	0.5 kPa
CANOPY	2.4 kPa**	0.5 kPa

* INCLUDES ALLOWANCE FOR SLOPES AND ROOFING MATERIALS
** AN ALLOWANCE FOR SNOW LOAD OF 1.12 kPa HAS BEEN CONSIDERED. SEE PLAN FOR ADDITIONAL SNOWLOAD

3. CONCRETE COVER FOR TOP AND BOTTOM BARS IN SLABS TO BE 25 mm.
4. APPROVAL MUST BE OBTAINED FROM ENGINEER FOR ALL OPENINGS OTHER THAN THOSE SHOWN ON PLAN.
5. THE PROJECT SUPERINTENDENT MUST CONTACT THIS OFFICE 24 HOURS PRIOR TO PLACING STRUCTURAL CONCRETE FOR A REVIEW OF PREPARATIONS.
6. SEE TYPICAL DETAIL DRAWING FOR LINTELS IN NON-LOAD BEARING BLOCK WALLS.
7. SEE ALSO TYPICAL NOTES AND DETAILS.
8. REFER TO BEAM AND COLUMN SCHEDULES, WALL ELEVATIONS.
9. PROVIDE TLS FOR ALL TRANSFER SLABS REINFORCEMENT.
10. PROVIDE CONTINUOUS TOP AND BOTTOM TEMPERATURE STEEL,HOOKED AT EDGE OF SLAB AND OPENINGS,IN ADDITION TO REINFORCEMENT SHOWN ON PLAN.
11. IN TRANFER SLABS, HOOK BOTTOM BARS AND EXTEND ALL TOP BARS INTO ADJACENT SLABS BY 2000mm (TYP)
12. TRANSFER SLABS TO BE SHORED UNTIL REACH SPECIFIED 28 DAYS CONCRETE STRENGTH.
13. SHORING SHOULD NOT BE SUPPORTED ON BUILDING SLABS.
14. ADD 2-20T&B CONT. AT PERIMETER BEND BARS TO SUIT SLAB EDGE. SEE SECTION FOR DETAIL.

TLL BUL TUL BLL

TUL = TOP UPPER LAYER
TLL = TOP LOWER LAYER
BUL = BOTTOM UPPER LAYER
BLL = BOTTOM LOWER LAYER

REINFORCEMENT PLACEMENT DIAGRAM

SLAB:	200 MIN. u/n
INTEGRITY BARS:	3-20M BEW
CONCRETE STRENGTH:	45 MPa
TEMPERATURE STEEL	
BOTTOM STEEL:	15@500BEW u/n
TOP STEEL:	15@500TEW u/n
SLAB:	300 MIN.
INTEGRITY BARS:	3-20M BEW
CONCRETE STRENGTH:	45 MPa
TEMPERATURE STEEL	
BOTTOM STEEL:	15@200BEW u/n
TOP STEEL:	15@300TEW u/n
SLAB:	500 MIN.
INTEGRITY BARS:	4-20M BEW
CONCRETE STRENGTH:	45 MPa
TEMPERATURE STEEL	
BOTTOM STEEL:	20@300BEW u/n
TOP STEEL:	15@300TEW u/n
FACE STEEL:	2-15M HEF
SLAB:	600 MIN.
INTEGRITY BARS:	3-25M BEW
CONCRETE STRENGTH:	45 MPa
TEMPERATURE STEEL	
BOTTOM STEEL:	20@250BEW u/n
TOP STEEL:	20@250TEW u/n
SLAB:	700 AND 800 MIN.
INTEGRITY BARS:	4-25M BEW
CONCRETE STRENGTH:	45 MPa
TEMPERATURE STEEL	
TOP STEEL:	20@300TEW u/n
BOTTOM STEEL:	25@200BEW u/n
FACE STEEL:	3-15M HEF

SEE PLAN FOR ADDITIONAL REINFORCEMENT

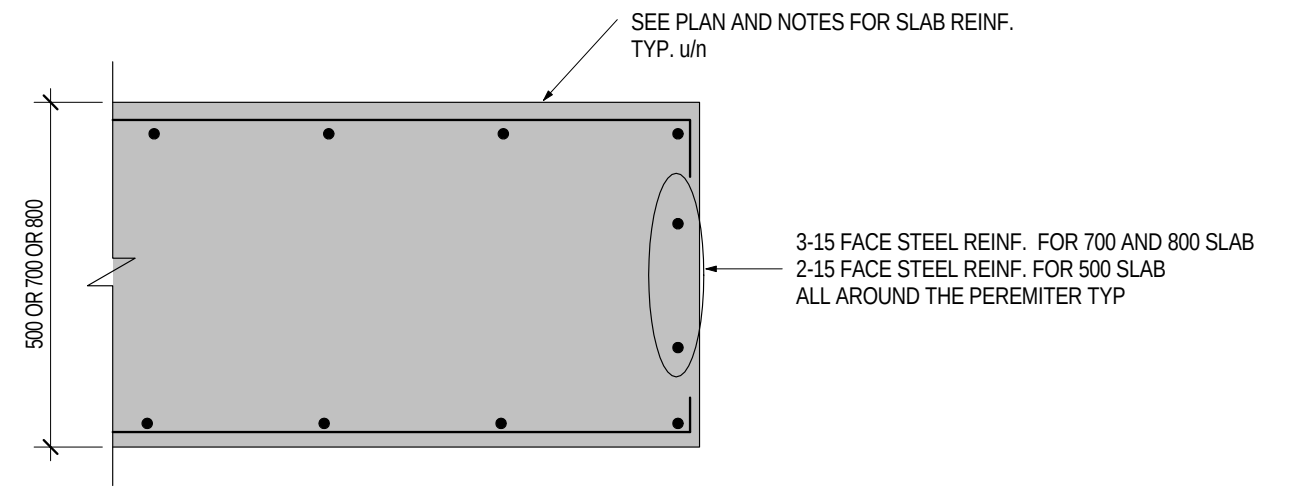
SEE PLAN AND NOTES FOR SLAB REINF.
TYP. u/n
500 OR 700 OR 800
3-15 FACE STEEL REINF. FOR 700 AND 800 SLAB
2-15 FACE STEEL REINF. FOR 500 SLAB
ALL AROUND THE PEREMITER TYP

SLAB EDGE FACE BARS DETAIL LEVEL 2

1 : 10

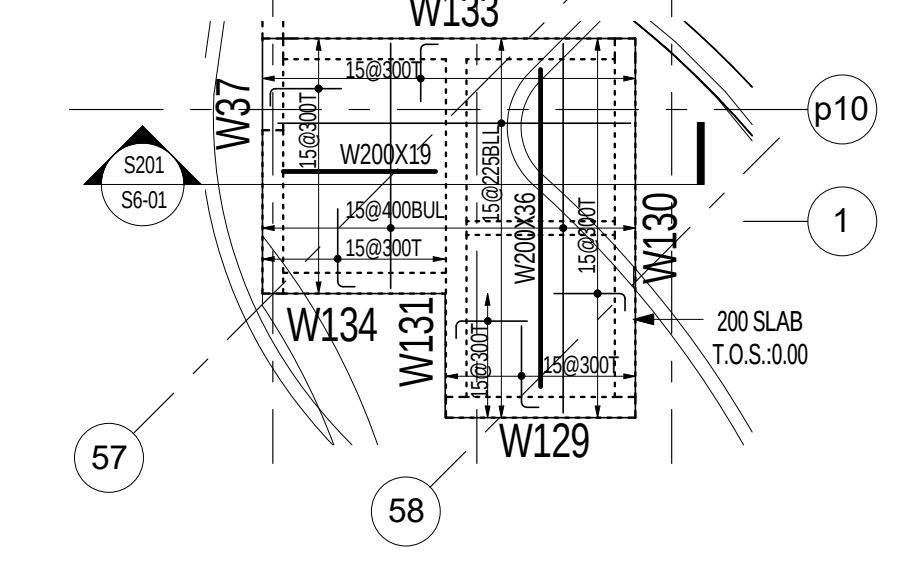
K
pK
L
W133
W37
W134
W129
W130
p10
1
57
58

LEVEL 2 ELEVATOR ROOF FRAMING PLAN

1 : 100

Contractor Must Check And Verify All Dimensions On The Job.

Do Not Scale The Drawings.

All Drawings, Specifications And Related Documents Are The Copyright Of The Architect And Must Be Returned Upon Request.

Reproduction Of Drawings, Specifications And Related Documents In Part Or Whole Is Forbidden Without The Architects Written Permission.

This Drawing Is Not To Be Used For Construction Until Signed ByThe Architect.

Date:

DEC.18,2015 DEC.18,2015

stephenson ENGINEERING
2550 Victoria Park Ave. Suite 602
Toronto ON M2J 5A9 | Tel: (416) 635 9970
www.stephenson-eng.com | info@stephenson-eng.com

No	Revision	Date

No	Issued For	Date
7	ISSUED FOR STEEL TENDER	DEC.18,2015
4	BUILDING PERMIT RESUBMISSION	SEPT.21,2015
3	BUILDING PERMIT RESUBMISSION	JULY 22,2015
2	BUILDING PERMIT SUBMISSION	JUNE 12,2015
1	ISSUED FOR WT REVIEW	MAY 01,2015

AQUAVISTA
AT BAYSIDE TORONTO

Drawing Title
LEVEL 2 FLOOR FRAMING PLAN

Project
Hines TRIDEL®
AQUAVISTA
Block 3 - R3 & R4
Merchant's Whart
Toronto, ON

Scale
As indicated
Drawn by
DC
Checked by
IA/BBS
Project No.
20140031
Date
DEC.18,2015
Drawing No.
S1-09

Plot Date: 3/9/2016 11:13:37 AM

LEVEL 3 FRAMING PLAN - WITH BUL AND TLL

1 : 100

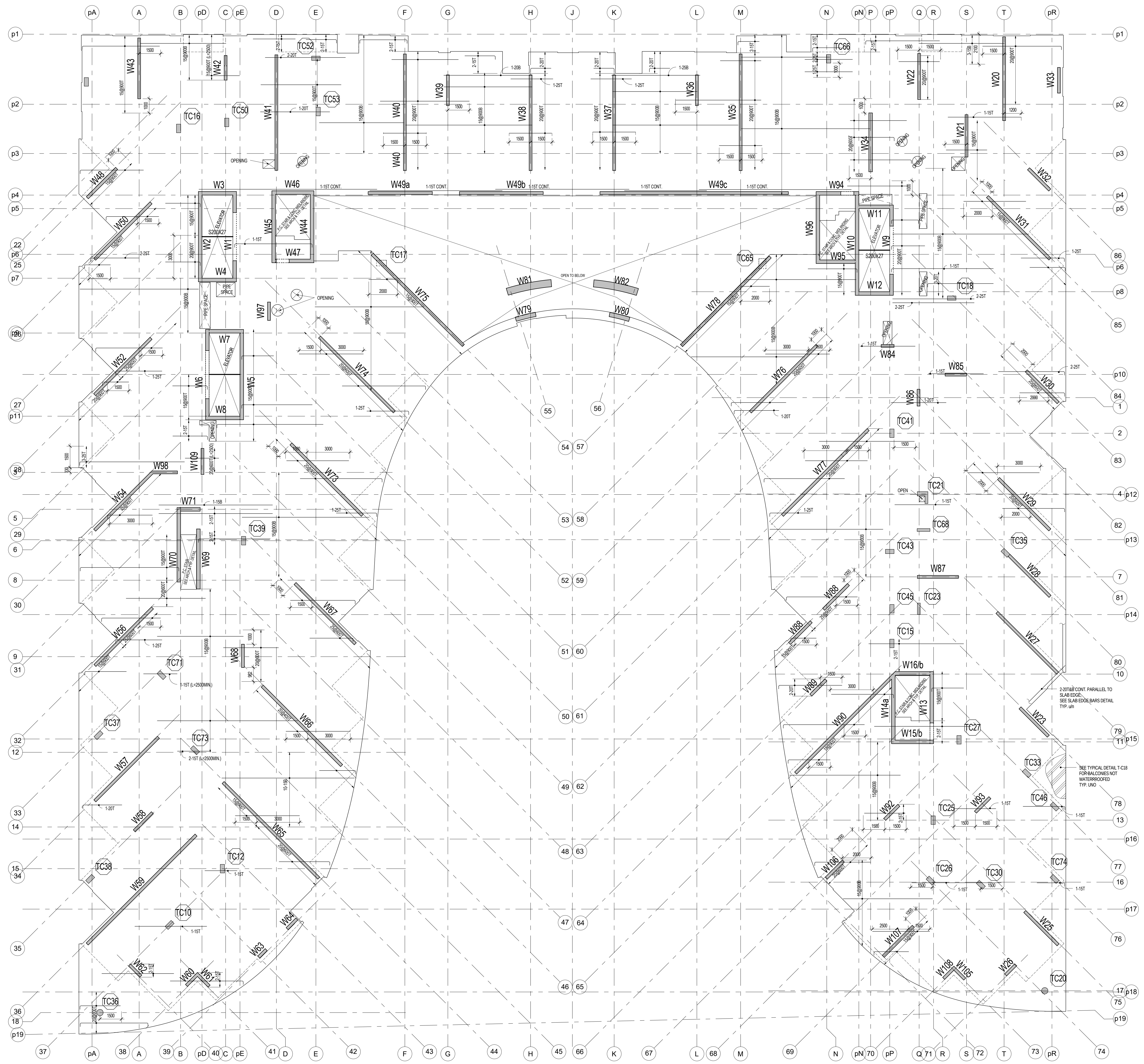
W43
W42
W41
W40
W39
W38
W37
W35
W22
W20
W33
W21
W34
W32
W3
W46
W49a
W49b
W49c
W94
W48
W50
W45
W44
W47
W2
W1
W4
W96
W95
W10
W11
W9
W12
W31
W81
W82
W79
W80
W75
W78
W97
W7
W6
W5
W8
W52
W74
W76
W84
W85
W30
W86
W98
W109
W54
W73
W77
W29
W71
W70
W69
W87
W28
W68
W67
W88
W27
W56
W89
W16/b
W14a
W13
W15/b
W90
W66
W23
W57
W58
W65
W91
W92
W93
W59
W64
W100
W24
W107
W108
W105
W26
W83
W62
W60
W61
TC52
TC66
TC53
TC50
TC16
TC17
TC65
TC18
TC41
TC21
TC68
TC39
TC43
TC35
TC45
TC23
TC15
TC71
TC73
TC37
TC27
TC33
TC46
TC25
TC12
TC38
TC26
TC30
TC74
TC10
TC20
TC36
OPENING
OPEN TO BELOW
2-20T&B CONT. PARALLEL TO SLAB EDGE. SEE SLAB EDGE BARS DETAIL TYP. u/n
SEE TYPICAL DETAIL T-C18 FOR BALCONIES NOT WATERPROOFED TYP. UNO

LEVEL 3 FRAMING PLAN WITH - BLL AND TUL

1 : 100

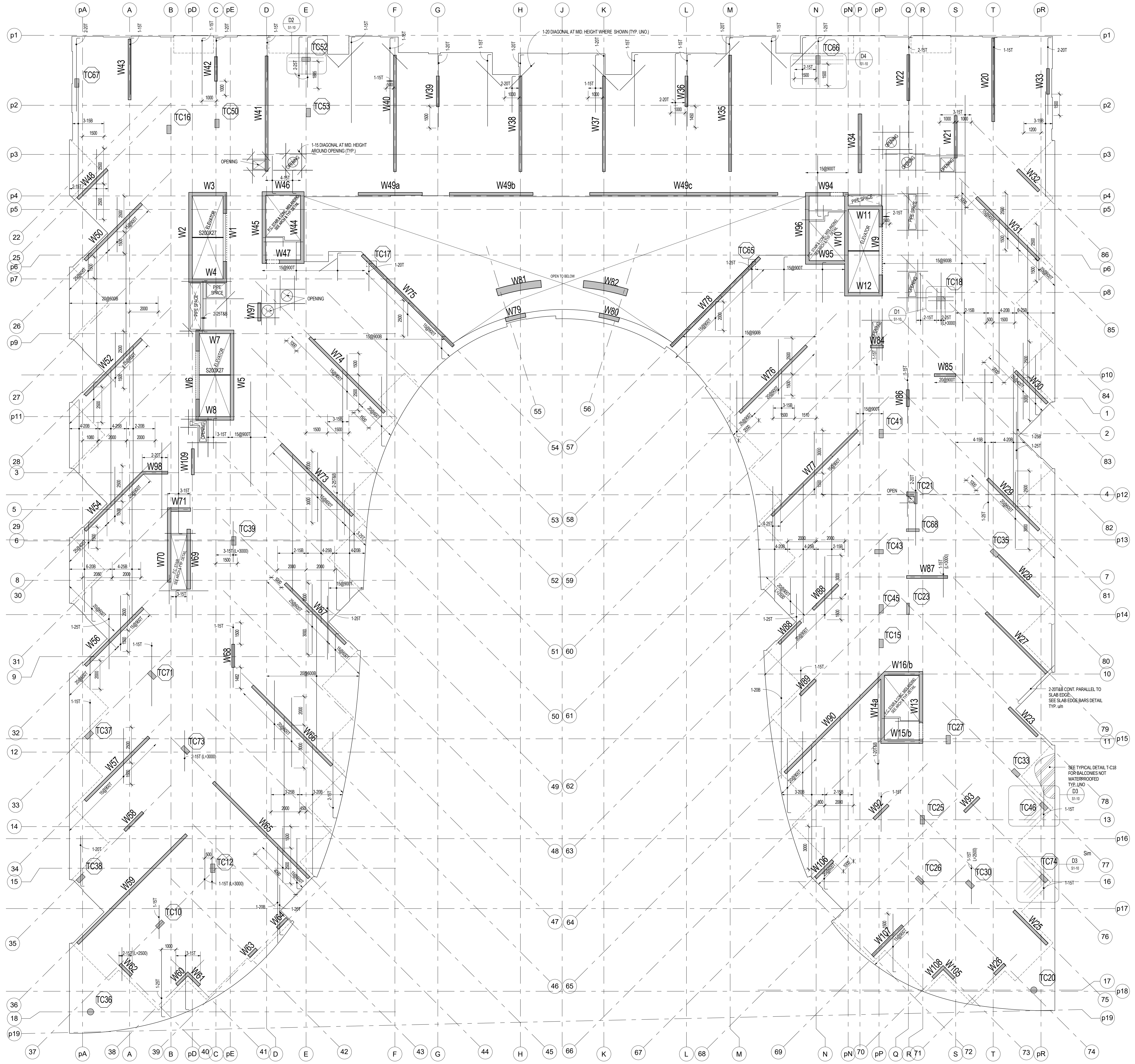
1-20 DIAGONAL AT MID HEIGHT WHERE SHOWN (TYP. UNO)
1-15 DIAGONAL AT MID HEIGHT AROUND OPENING (TYP.)
W43
W42
W41
W40
W39
W38
W37
W35
W22
W20
W33
W3
W46
W49a
W49b
W49c
W94
W47
W4
W7
W8
W98
W71
W70
W69
W16/b
W15/b
TC67
TC52
TC66
TC53
TC50
TC16
D1
D2
D3
D4
OPENING
OPEN TO BELOW

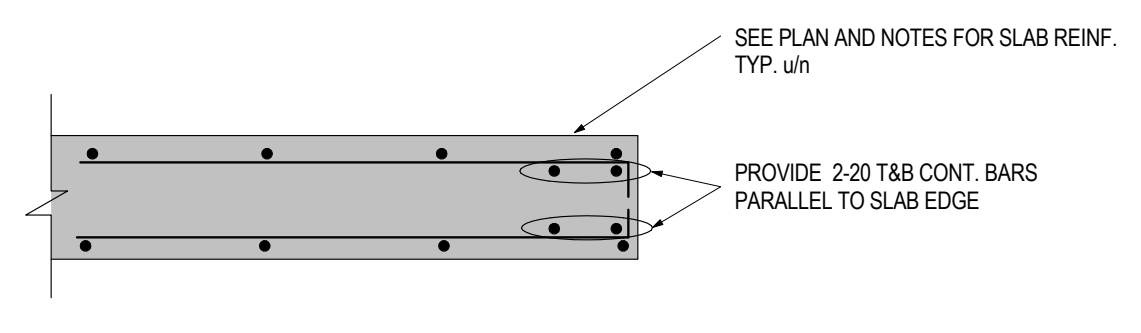
SEE PLAN AND NOTES FOR SLAB REINF. TYP. u/n
PROVIDE 2-20 T&B CONT. BARS PARALLEL TO SLAB EDGE

SLAB EDGE BARS DETAIL

1 : 10

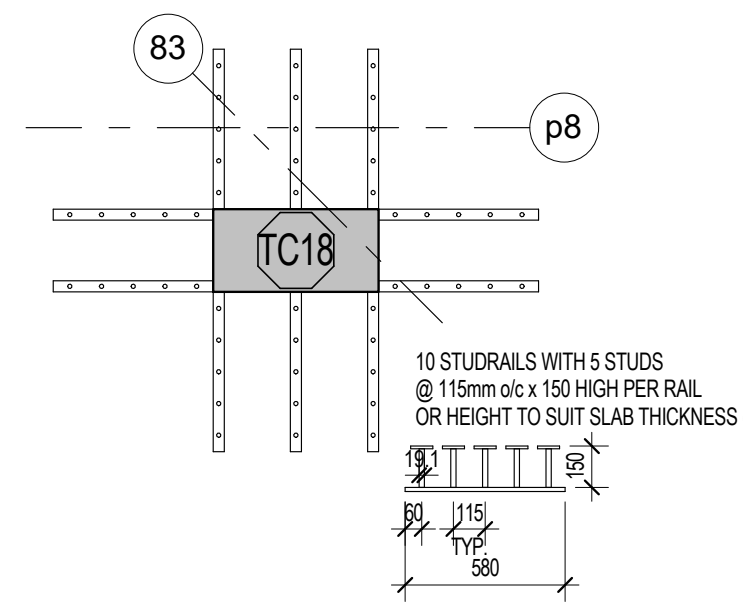
83
p8
TC18
10 STUDRAILS WITH 5 STUDS @ 115mm o/c x 150 HIGH PER RAIL OR HEIGHT TO SUIT SLAB THICKNESS (TYP.)
19.1
150
60
115
TYP.
580

D1 S1-10 PLAN DETAIL

1 : 25

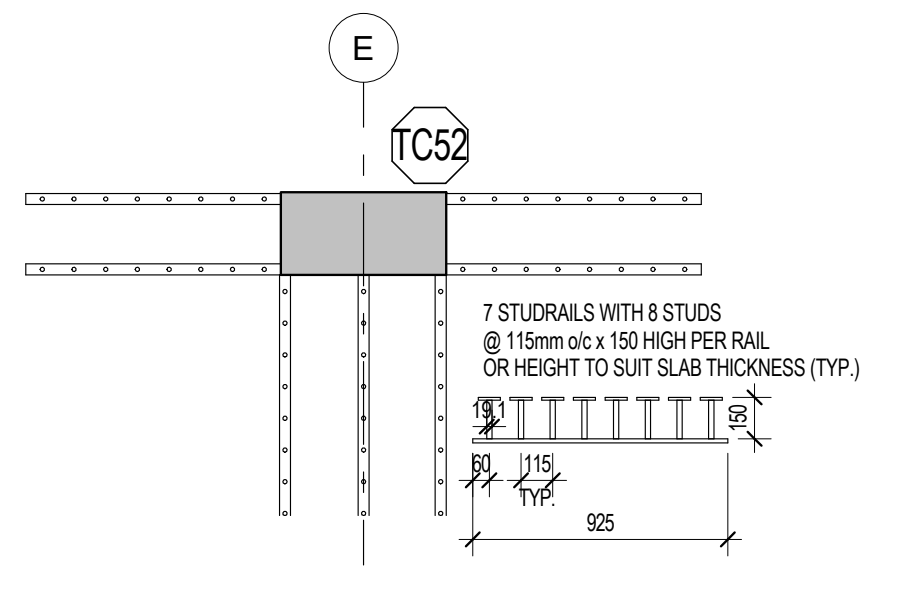
E
TC52
7 STUDRAILS WITH 8 STUDS @ 115mm o/c x 150 HIGH PER RAIL OR HEIGHT TO SUIT SLAB THICKNESS (TYP.)
19.1
150
60
115
TYP.
925

D2 S1-10 PLAN DETAIL

1 : 25

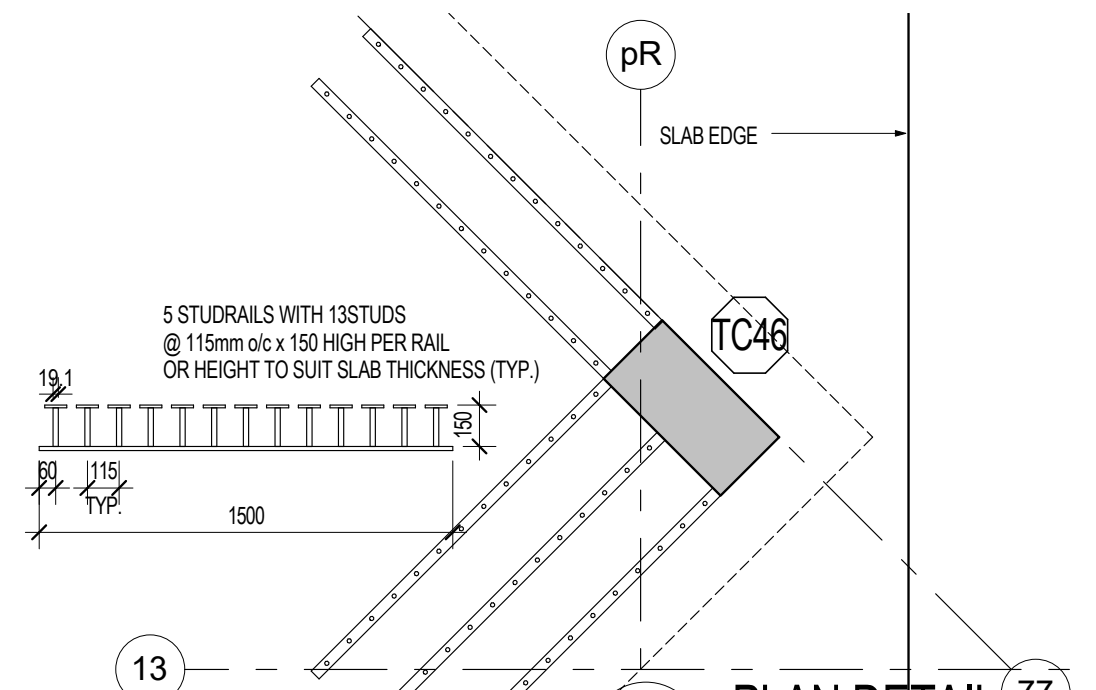
pR
SLAB EDGE
TC46
5 STUDRAILS WITH 13STUDS @ 115mm o/c x 150 HIGH PER RAIL OR HEIGHT TO SUIT SLAB THICKNESS (TYP.)
19.1
150
60
115
TYP.
1500
13
77

D3 S1-10 PLAN DETAIL

1 : 25

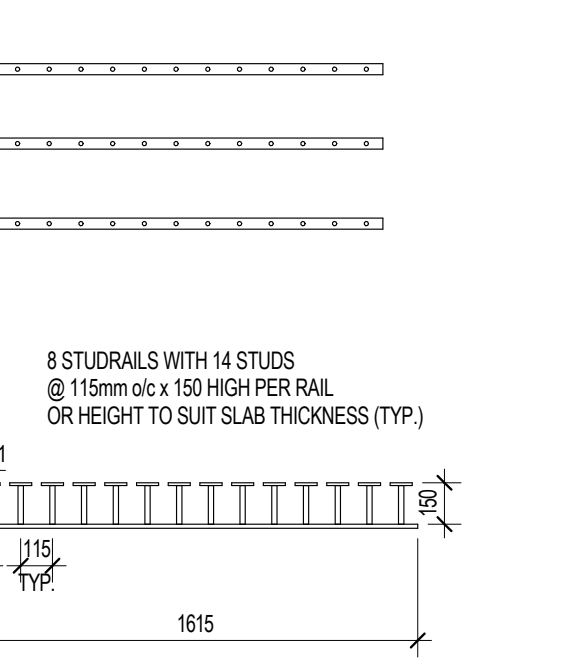
N
TC66
8 STUDRAILS WITH 14 STUDS @ 115mm o/c x 150 HIGH PER RAIL OR HEIGHT TO SUIT SLAB THICKNESS (TYP.)
19.1
150
60
115
TYP.
1615

D4 S1-10 PLAN DETAIL

1 : 25

TUL = TOP UPPER LAYER
TLL = TOP LOWER LAYER
BUL = BOTTOM UPPER LAYER
BLL = BOTTOM LOWER LAYER

REINFORCEMENT PLACEMENT DIAGRAM

SLAB: 200 MIN. u/n
INTEGRITY BARS: 3-20M BEW
CONCRETE STRENGTH: 25 MPa
TEMP. STEEL: 15@500 T&B EW

SEE PLAN FOR ADDITIONAL REINFORCEMENT

NOTES:

1. TOP OF STRUCTURAL SLAB TO BE 0.0 mm BELOW FINISHED FLOOR DATUM ELEVATION EXCEPT AS CROSSED AND NOTED. SEE ARCHITECTURAL DRAWINGS FOR DATUM ELEVATION.
2. THE STRUCTURAL SLAB HAS BEEN DESIGNED FOR THE FOLLOWING LIVE LOADS (LL) AND SUPERIMPOSED DEAD LOADS (SDL) IN ADDITION TO THE SELF WEIGHT.

	LL	SDL
SUITES	1.9 kPa	1.25 kPa
TERRACE	4.8 kPa**	6.0 kPa*
STAIRS/LOBBY	4.8 kPa	0.5 kPa
BALCONIES	4.8 kPa**	0.5 kPa

* INCLUDES ALLOWANCE FOR SLOPES AND ROOFING MATERIALS
** AN ALLOWANCE FOR SNOW LOAD OF 1.28 kPa HAS BEEN CONSIDERED.

3. CONCRETE COVER FOR TOP AND BOTTOM BARS IN SLABS TO BE 25 mm.
4. APPROVAL MUST BE OBTAINED FROM ENGINEER FOR ALL OPENINGS OTHER THAN THOSE SHOWN ON PLAN.
5. THE PROJECT SUPERINTENDENT MUST CONTACT THIS OFFICE 24 HOURS PRIOR TO PLACING STRUCTURAL CONCRETE FOR A REVIEW OF PREPARATIONS.
6. SEE ALSO TYPICAL NOTES AND DETAILS.
7. SEE BEAM AND COLUMN SCHEDULES, WALL ELEVATIONS.
8. PROVIDE CONTINUOUS TEMPERATURE STEEL TOP AND BOTTOM, HOOKED AT EDGE OF SLAB AND OPENINGS, IN ADDITION TO REINFORCEMENT SHOWN ON PLAN.
9. PROVIDE TLS FOR ALL SLAB REINFORCEMENT.
10. ADD 2-20T&B CONT. AT PERIMETER BEND BARS TO SUIT SLAB EDGE. SEE SLAB EDGE BARS DETAIL.

Contractor Must Check And Verify All Dimensions On The Job.

Do Not Scale The Drawings.

All Drawings, Specifications And Related Documents Are The Copyright Of The Architect And Must Be Returned Upon Request.

Reproduction Of Drawings, Specifications And Related Documents In Part Or Whole Is Forbidden Without The Architects Written Permission.

This Drawing Is Not To Be Used For Construction Until Signed ByThe Architect.

Date:

DEC.18,2015 DEC.18,2015

stephenson ENGINEERING
2550 Victoria Park Ave. Suite 602
Toronto ON M2J 5A9 | Tel: (416) 635 9970
www.stephenson-eng.com | info@stephenson-eng.com

No	Revision	Date

No	Issued For	Date
7	ISSUED FOR STEEL TENDER	DEC.18,2015
4	BUILDING PERMIT RESUBMISSION	SEPT.21,2015
3	BUILDING PERMIT RESUBMISSION	JULY 22,2015
2	BUILDING PERMIT SUBMISSION	JUNE 12,2015
1	ISSUED FOR WT REVIEW	MAY 01,2015

AQUAVISTA
AT BAYSIDE TORONTO

Drawing Title
LEVEL 3 FLOOR FRAMING PLAN

Project
Hines TRIDEL®
AQUAVISTA
Block 3 - R3 & R4
Merchant's Whart
Toronto, ON

Scale: As indicated
Drawn by: DC
Checked by: IA/BBS
Project No.: 20140031
Date: DEC.18,2015
Drawing No.: S1-10

LEVEL 4 FRAMING PLAN - WITH BUL AND TLL

1 : 100

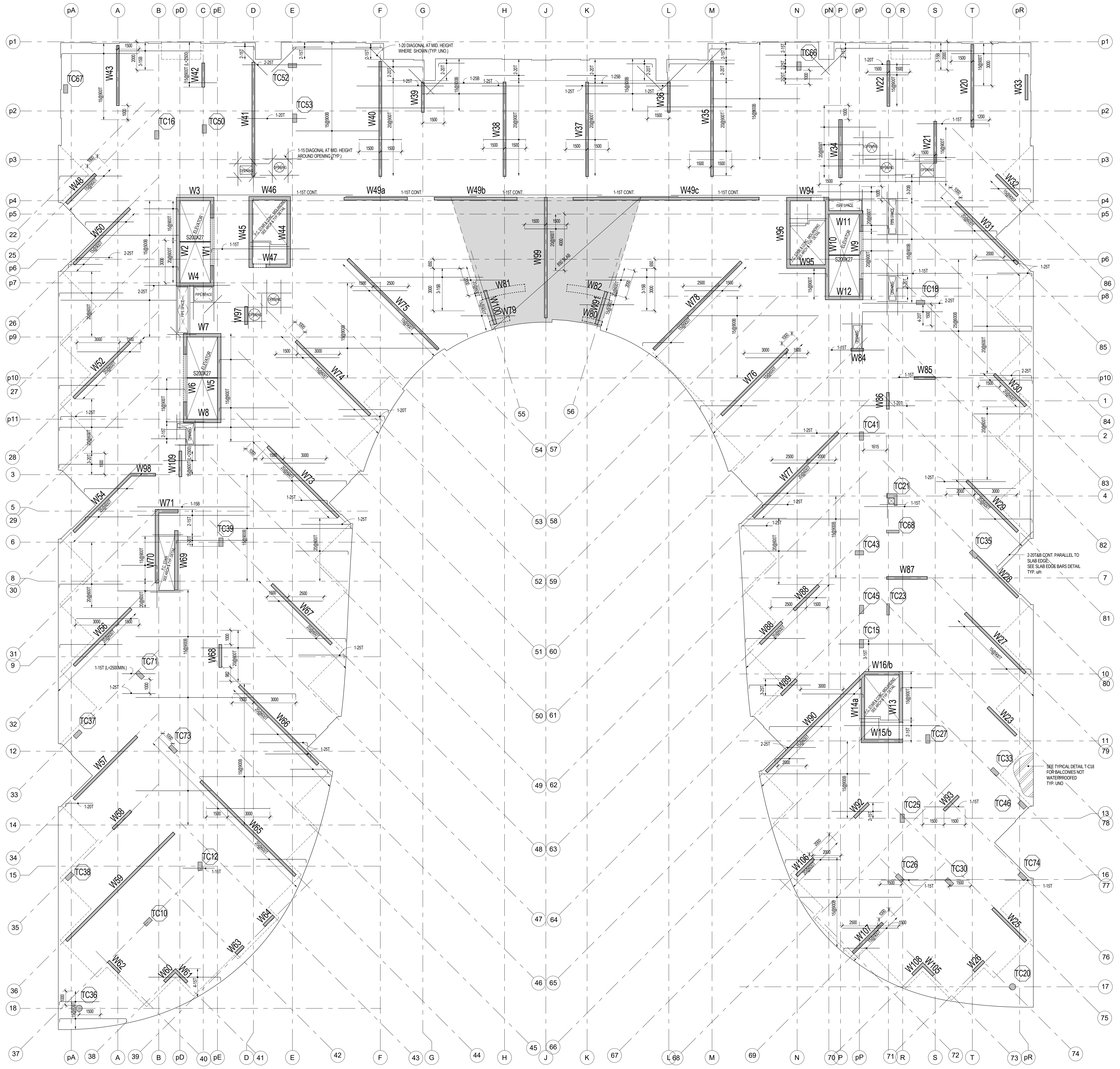
p1
p2
p3
p4
p5
p6
p7
p8
p9
p10
p11
pA
A
B
pD
C
pE
D
E
F
G
H
J
K
L
M
N
pN
P
pP
Q
R
S
T
pR
W3
W46
W49a
W49b
W49c
W94
W99
TC66
TC67
TC52
TC53
TC16
TC50
TC18
TC41
TC21
TC68
TC43
TC45
TC23
TC15
TC71
TC37
TC73
TC12
TC38
TC10
TC36
TC27
TC25
TC26
TC30
TC33
TC46
TC35
TC39
TC74
TC20
W16/b
W15/b
W85
W87
W84
1-20 DIAGONAL AT MID. HEIGHT WHERE SHOWN (TYP. UNO)
1-15 DIAGONAL AT MID. HEIGHT AROUND OPENING (TYP.)
2-20T&B CONT. PARALLEL TO SLAB EDGE, SEE SLAB EDGE BARS DETAIL TYP. u/n
SEE TYPICAL DETAIL T-C18 FOR BALCONIES NOT WATERPROOFED TYP. UNO

LEVEL 4 FRAMING PLAN - WITH BLL AND TUL

1 : 100

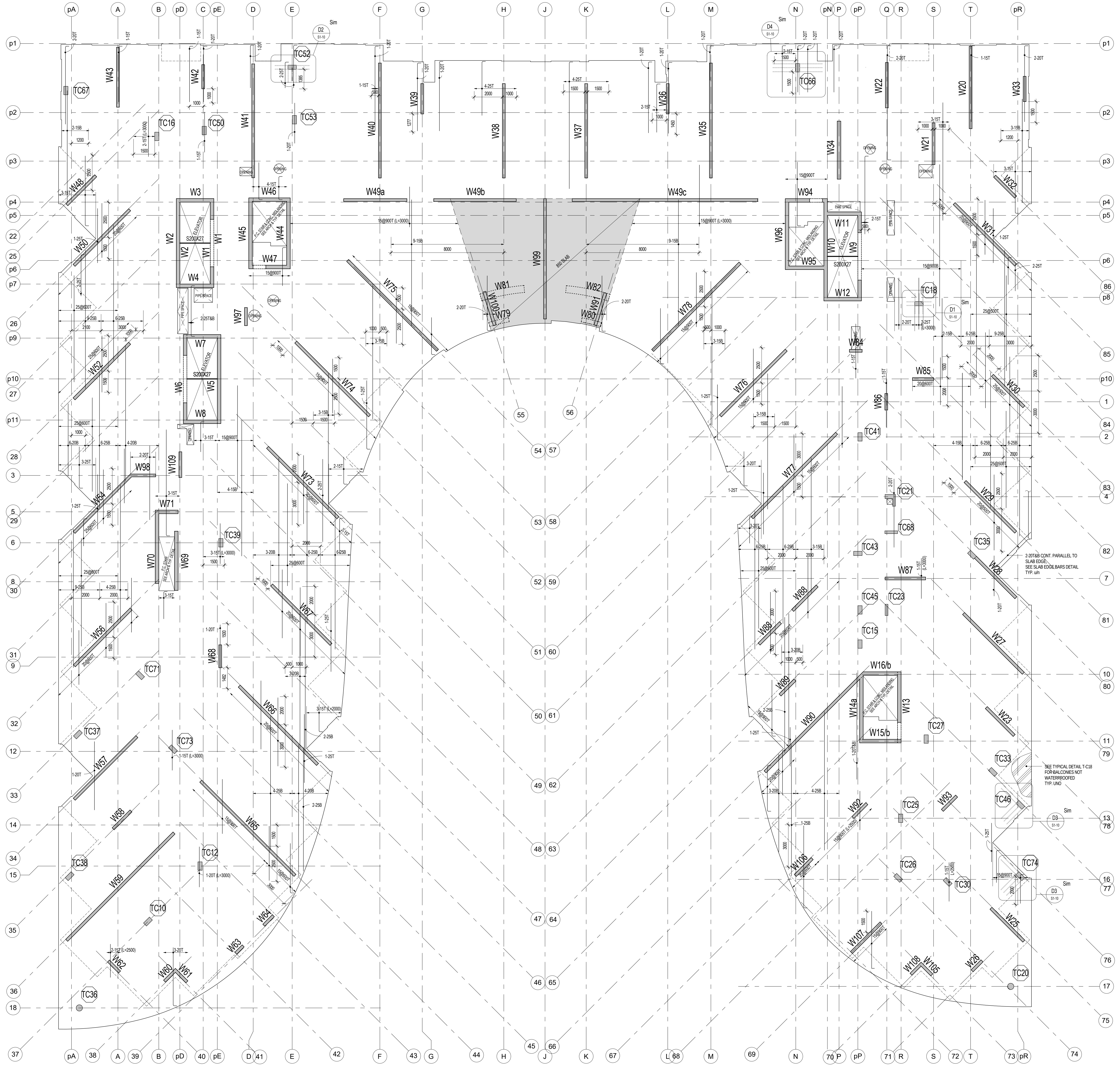
p1
p2
p3
p4
p5
W3
W46
W49a
W49b
W49c
W94
W99
2-20T&B CONT. PARALLEL TO SLAB EDGE, SEE SLAB EDGE BARS DETAIL TYP. u/n
SEE TYPICAL DETAIL T-C18 FOR BALCONIES NOT WATERPROOFED TYP. UNO

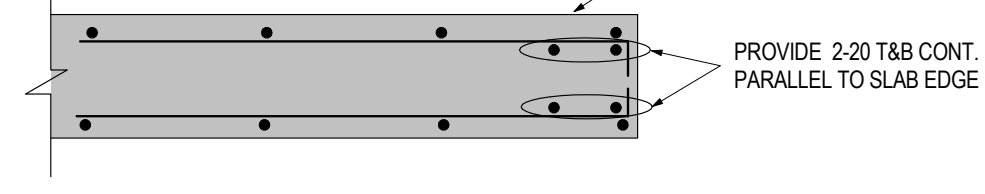
SEE PLAN AND NOTES FOR SLAB REINF. TYP. u/n
PROVIDE 2-20 T&B CONT. BARS PARALLEL TO SLAB EDGE

SLAB EDGE BARS DETAIL

1 : 10

TUL
BLL
TLL
BUL

TUL = TOP UPPER LAYER
TLL = TOP LOWER LAYER
BUL = BOTTOM UPPER LAYER
BLL = BOTTOM LOWER LAYER

REINFORCEMENT PLACEMENT DIAGRAM

SLAB:	200 MIN. u/n
INTEGRITY BARS:	3-20M BEW
CONCRETE STRENGTH:	25 MPa
TEMP. STEEL:	15@500 T&B EW

SLAB:	850 MIN.
INTEGRITY BARS:	3-25M BEW
CONCRETE STRENGTH:	35 MPa
TEMP. STEEL:	20@175 T&B EW

SEE PLAN FOR ADDITIONAL REINFORCEMENT

NOTES:

1. TOP OF STRUCTURAL SLAB TO BE 0.0 mm BELOW FINISHED FLOOR DATUM ELEVATION EXCEPT AS CROSSED AND NOTED. SEE ARCHITECTURAL DRAWINGS FOR DATUM ELEVATION.
2. THE STRUCTURAL SLAB HAS BEEN DESIGNED FOR THE FOLLOWING LIVE LOADS (LL) AND SUPERIMPOSED DEAD LOADS (SDL) IN ADDITION TO THE SELF WEIGHT.

	LL	SDL
SUITES	1.9 kPa	1.25 kPa
TERRACE	4.8 kPa**	6.0 kPa*
STAIRS/LOBBY	4.8 kPa	0.5 kPa
BALCONIES	4.8 kPa**	0.5 kPa

* INCLUDES ALLOWANCE FOR SLOPES AND ROOFING MATERIALS

** AN ALLOWANCE FOR SNOW LOAD OF 1.28 kPa HAS BEEN CONSIDERED.

3. CONCRETE COVER FOR TOP AND BOTTOM BARS IN SLABS TO BE 25 mm.
4. APPROVAL MUST BE OBTAINED FROM ENGINEER FOR ALL OPENINGS OTHER THAN THOSE SHOWN ON PLAN.
5. THE PROJECT SUPERINTENDENT MUST CONTACT THIS OFFICE 24 HOURS PRIOR TO PLACING STRUCTURAL CONCRETE FOR A REVIEW OF PREPARATIONS.
6. SEE ALSO TYPICAL NOTES AND DETAILS.
7. SEE BEAM AND COLUMN SCHEDULES, WALL ELEVATIONS.
8. PROVIDE CONTINUOUS TEMPERATURE STEEL TOP AND BOTTOM, HOOKED AT EDGE OF SLAB AND OPENINGS, IN ADDITION TO REINFORCEMENT SHOWN ON PLAN.
9. PROVIDE TLS FOR ALL SLAB REINFORCEMENT.
10. ADD 2-20T&B CONT. AT PERIMETER BEND BARS TO SUIT SLAB EDGE. SEE SLAB EDGE BARS DETAIL.

Contractor Must Check And Verify All Dimensions On The Job.

Do Not Scale The Drawings.

All Drawings, Specifications And Related Documents Are The Copyright Of The Architect And Must Be Returned Upon Request.

Reproduction Of Drawings, Specifications And Related Documents In Part Or Whole Is Forbidden Without The Architects Written Permission.

This Drawing Is Not To Be Used For Construction Until Signed ByThe Architect.

Date:

DEC.18,2015 DEC.18,2015

stephenson
ENGINEERING
2550 Victoria Park Ave. Suite 602
Toronto ON M2J 5A9 | Tel: (416) 635 9970
www.stephenson-eng.com | info@stephenson-eng.com

No	Revision	Date

No	Issued For	Date
7	ISSUED FOR STEEL TENDER	DEC.18,2015
4	BUILDING PERMIT RESUBMISSION	SEPT.21,2015
3	BUILDING PERMIT RESUBMISSION	JULY 22,2015
2	BUILDING PERMIT SUBMISSION	JUNE 12,2015
1	ISSUED FOR WT REVIEW	MAY 01,2015

AQUAVISTA
AT BAYSIDE TORONTO

Drawing Title
LEVEL 4 FLOOR FRAMING PLAN

Project
Hines TRIDEL®
AQUAVISTA
Block 3 - R3 & R4
Merchant's Whart
Toronto, ON

Scale: As indicated
Drawn by: DC
Checked by: IA/BBS
Project No.: 20140031
Date: DEC.18,2015
Drawing No.: S1-11

LEVEL 5 FRAMING PLAN - WITH BUL AND TLL
1 : 100

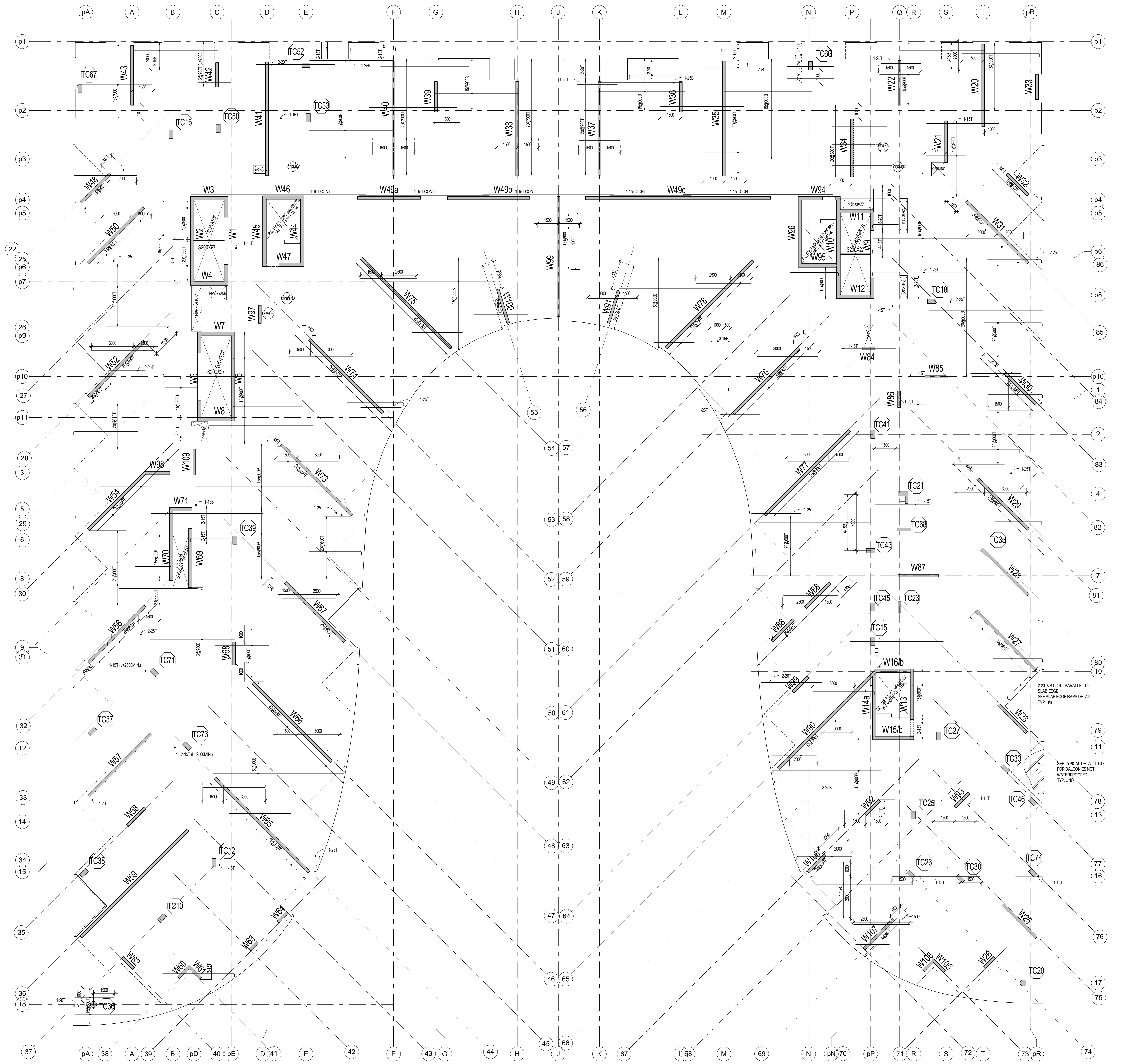

LEVEL 5 FRAMING PLAN WITH BLL AND TUL
1 : 100

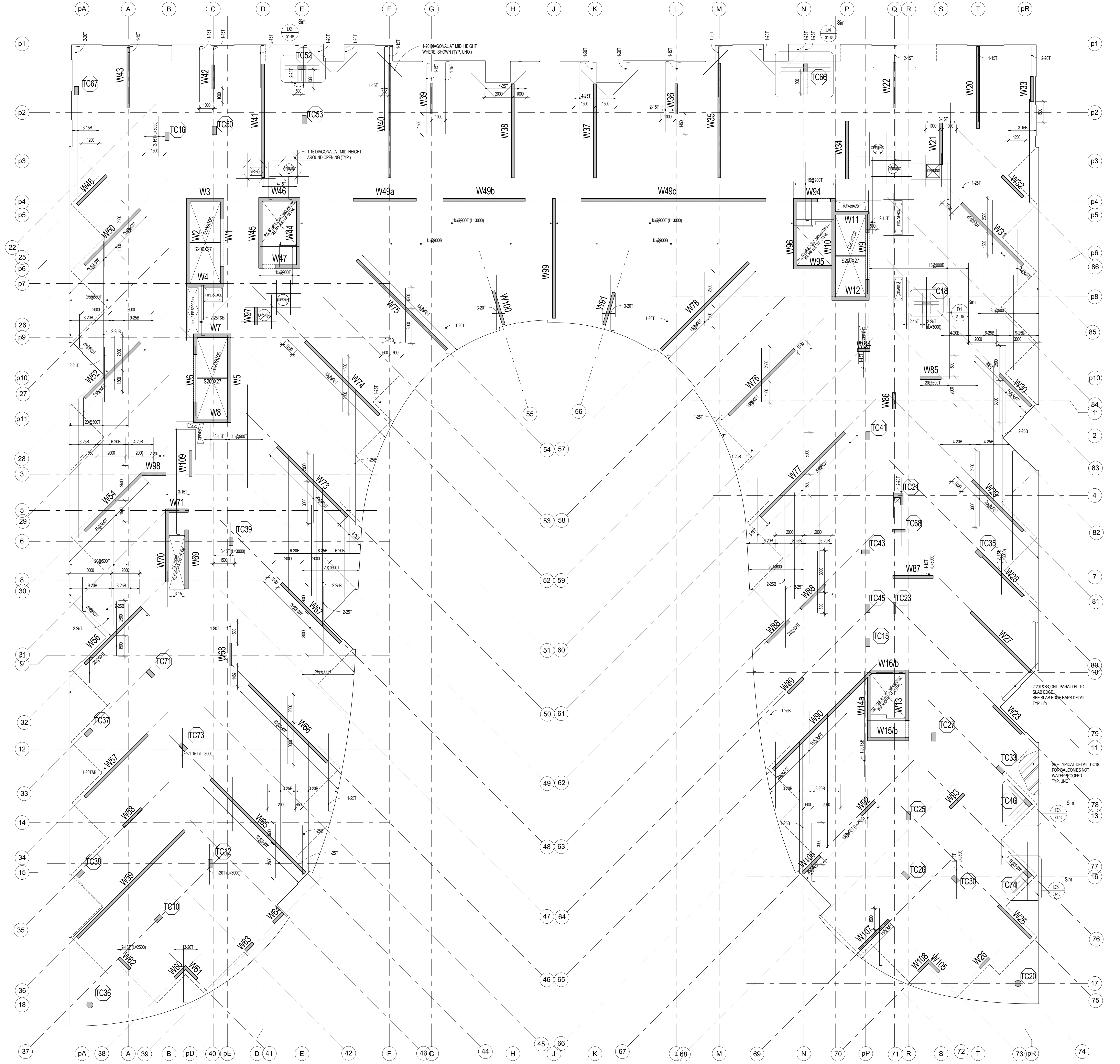

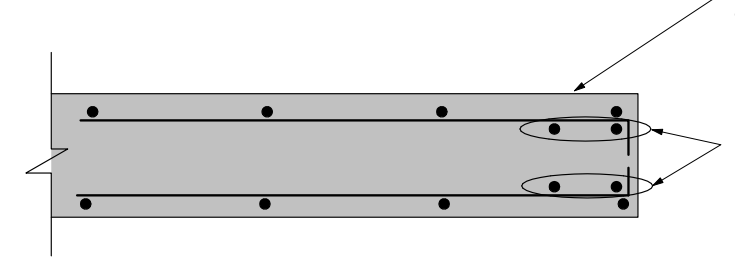
SEE PLAN AND NOTES FOR SLAB REINF. TYP. u/n
PROVIDE 2-20 T&B CONT. BARS PARALLEL TO SLAB EDGE

SLAB EDGE BARS DETAIL
1 : 10

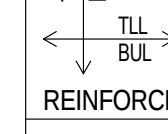

TUL = TOP UPPER LAYER
TLL = TOP LOWER LAYER
BUL = BOTTOM UPPER LAYER
BLL = BOTTOM LOWER LAYER

REINFORCEMENT PLACEMENT DIAGRAM

SLAB:	200 MIN. u/n
INTEGRITY BARS:	3-20M BEW
CONCRETE STRENGTH:	25 MPa
TEMP. STEEL:	15@500 T&B EW

SEE PLAN FOR ADDITIONAL REINFORCEMENT

NOTES:

1. TOP OF STRUCTURAL SLAB TO BE 0.0 mm BELOW FINISHED FLOOR DATUM ELEVATION EXCEPT AS CROSSED AND NOTED. SEE ARCHITECTURAL DRAWINGS FOR DATUM ELEVATION.
2. THE STRUCTURAL SLAB HAS BEEN DESIGNED FOR THE FOLLOWING LIVE LOADS (LL) AND SUPERIMPOSED DEAD LOADS (SDL) IN ADDITION TO THE SELF WEIGHT.

	LL	SDL
SUITES	1.9 kPa	1.25 kPa
TERRACE	4.8 kPa**	6.0 kPa*
STAIRS/LOBBY	4.8 kPa	0.5 kPa
BALCONIES	4.8 kPa**	0.5 kPa

* INCLUDES ALLOWANCE FOR SLOPES AND ROOFING MATERIALS
** AN ALLOWANCE FOR SNOW LOAD OF 1.28 kPa HAS BEEN CONSIDERED.

3. CONCRETE COVER FOR TOP AND BOTTOM BARS IN SLABS TO BE 25 mm.
4. APPROVAL MUST BE OBTAINED FROM ENGINEER FOR ALL OPENINGS OTHER THAN THOSE SHOWN ON PLAN.
5. THE PROJECT SUPERINTENDENT MUST CONTACT THIS OFFICE 24 HOURS PRIOR TO PLACING STRUCTURAL CONCRETE FOR A REVIEW OF PREPARATIONS.
6. SEE ALSO TYPICAL NOTES AND DETAILS.
7. SEE BEAM AND COLUMN SCHEDULES, WALL ELEVATIONS.
8. PROVIDE CONTINUOUS TEMPERATURE STEEL TOP AND BOTTOM, HOOKED AT EDGE OF SLAB AND OPENINGS, IN ADDITION TO REINFORCEMENT SHOWN ON PLAN.
9. PROVIDE TLS FOR ALL SLAB REINFORCEMENT.
10. ADD 2-20T&B CONT. AT PERIMETER BEND BARS TO SUIT SLAB EDGE. SEE SLAB EDGE BARS DETAIL.

Contractor Must Check And Verify All Dimensions On The Job.

Do Not Scale The Drawings.

All Drawings, Specifications And Related Documents Are The Copyright Of The Architect And Must Be Returned Upon Request.

Reproduction Of Drawings, Specifications And Related Documents In Part Or Whole Is Forbidden Without The Architects Written Permission.

This Drawing Is Not To Be Used For Construction Until Signed ByThe Architect.

Date:

DEC.18,2015 DEC.18,2015

stephenson
ENGINEERING
2550 Victoria Park Ave. Suite 602
Toronto ON M2J 5A9 | Tel: (416) 635 9970
www.stephenson-eng.com | info@stephenson-eng.com

No	Revision	Date

No	Issued For	Date
7	ISSUED FOR STEEL TENDER	DEC.18,2015
4	BUILDING PERMIT RESUBMISSION	SEPT.21,2015
3	BUILDING PERMIT RESUBMISSION	JULY 22,2015
2	BUILDING PERMIT SUBMISSION	JUNE 12,2015
1	ISSUED FOR WT REVIEW	MAY 01,2015

AQUAVISTA
AT BAYSIDE TORONTO

Drawing Title
LEVEL 5 FLOOR FRAMING PLAN

Project
Hines TRIDEL®
AQUAVISTA
Block 3 - R3 & R4
Merchant's Whart
Toronto, ON

Scale
As indicated
Drawn by
DC
Checked by
IA/BBS
Project No.
20140031
Date
DEC.18,2015
Drawing No.
S1-12

LEVEL 6 FRAMING PLAN - WITH BUL AND TLL
1 : 100

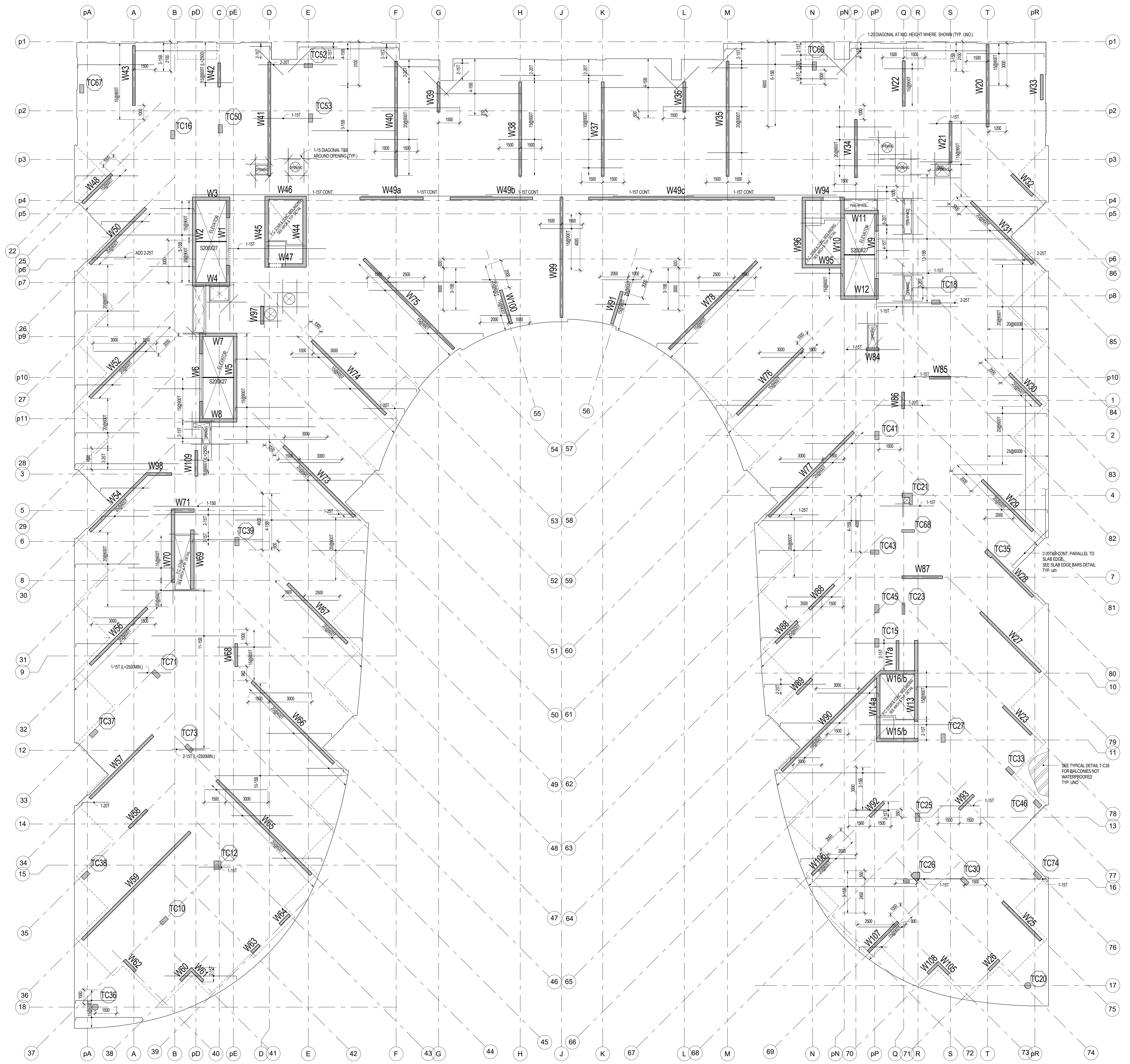

1-20 DIAGONAL AT MID. HEIGHT WHERE SHOWN (TYP. UNO.)
1-15 DIAGONAL T&B AROUND OPENING (TYP.)
2-20T&B CONT. PARALLEL TO SLAB EDGE. SEE SLAB EDGE BARS DETAIL TYP. u/n
SEE TYPICAL DETAIL T-C18 FOR BALCONIES NOT WATERPROOFED TYP. UNO.
W49a
W49b
W49c

LEVEL 6 FRAMING PLAN - WITH BLL AND TUL
1 : 100

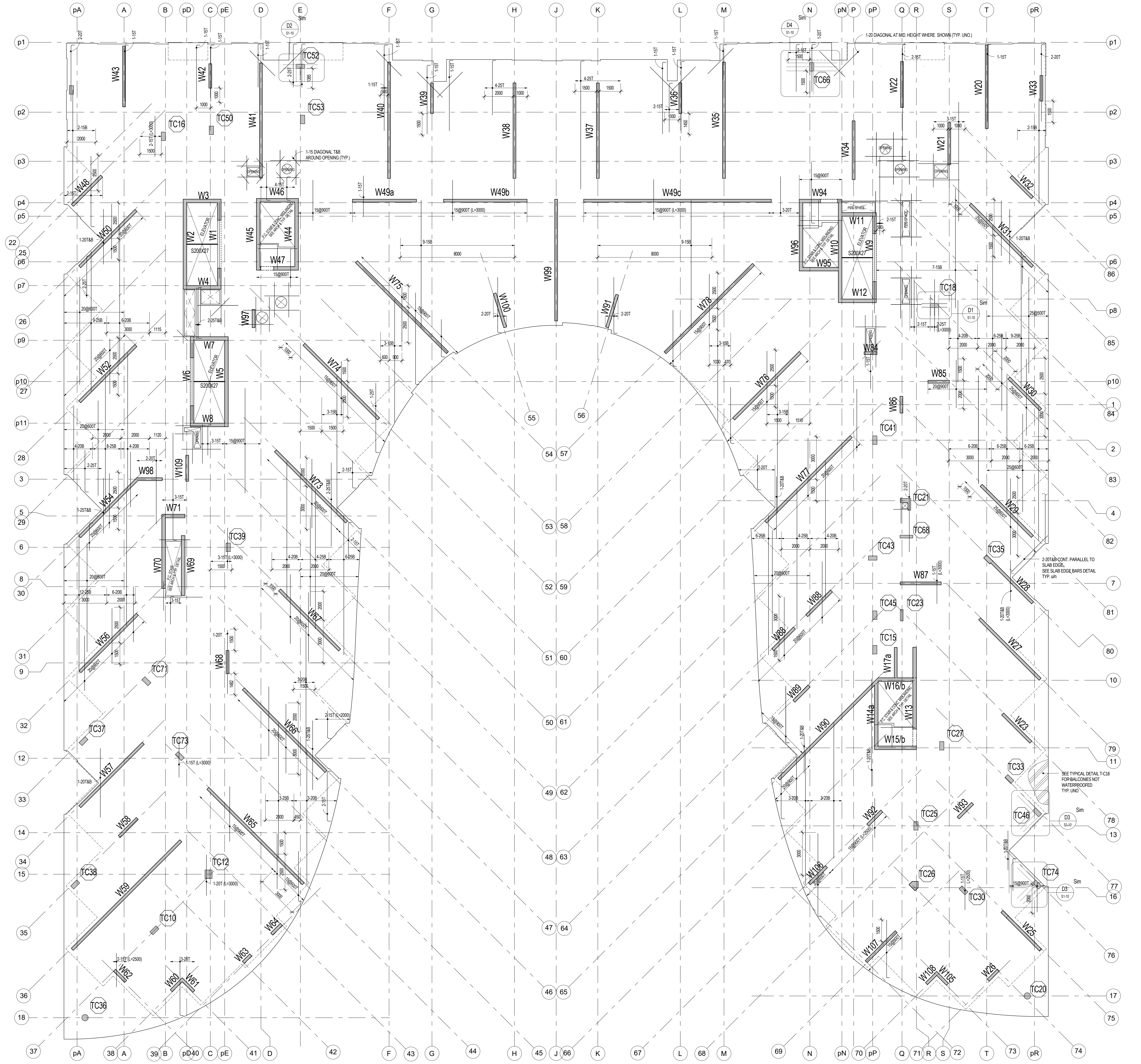

1-20 DIAGONAL AT MID. HEIGHT WHERE SHOWN (TYP. UNO.)
1-15 DIAGONAL T&B AROUND OPENING (TYP.)
2-20T&B CONT. PARALLEL TO SLAB EDGE. SEE SLAB EDGE BARS DETAIL TYP. u/n
SEE TYPICAL DETAIL T-C18 FOR BALCONIES NOT WATERPROOFED TYP. UNO.

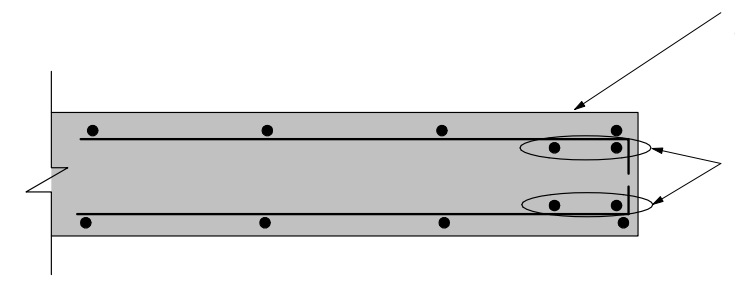

SEE PLAN AND NOTES FOR SLAB REINF. TYP. u/n
PROVIDE 2-20 T&B CONT. BARS PARALLEL TO SLAB EDGE

SLAB EDGE BARS DETAIL
1 : 10

TUL = TOP UPPER LAYER
TLL = TOP LOWER LAYER
BUL = BOTTOM UPPER LAYER
BLL = BOTTOM LOWER LAYER

REINFORCEMENT PLACEMENT DIAGRAM

SLAB:	200 MIN. u/n
INTEGRITY BARS:	3-20M BEW
CONCRETE STRENGTH:	25 MPa
TEMP. STEEL:	15@500 T&B EW

SEE PLAN FOR ADDITIONAL REINFORCEMENT

NOTES:

1. TOP OF STRUCTURAL SLAB TO BE 0.0 mm BELOW FINISHED FLOOR DATUM ELEVATION EXCEPT AS CROSSED AND NOTED. SEE ARCHITECTURAL DRAWINGS FOR DATUM ELEVATION.
2. THE STRUCTURAL SLAB HAS BEEN DESIGNED FOR THE FOLLOWING LIVE LOADS (LL) AND SUPERIMPOSED DEAD LOADS (SDL) IN ADDITION TO THE SELF WEIGHT.

	LL	SDL
SUITES	1.9 kPa	1.25 kPa
TERRACE	4.8 kPa**	6.0 kPa*
STAIRS/LOBBY	4.8 kPa	0.5 kPa
BALCONIES	4.8 kPa**	0.5 kPa

* INCLUDES ALLOWANCE FOR SLOPES AND ROOFING MATERIALS
** AN ALLOWANCE FOR SNOW LOAD OF 1.28 kPa HAS BEEN CONSIDERED.

3. CONCRETE COVER FOR TOP AND BOTTOM BARS IN SLABS TO BE 25 mm.
4. APPROVAL MUST BE OBTAINED FROM ENGINEER FOR ALL OPENINGS OTHER THAN THOSE SHOWN ON PLAN.
5. THE PROJECT SUPERINTENDENT MUST CONTACT THIS OFFICE 24 HOURS PRIOR TO PLACING STRUCTURAL CONCRETE FOR A REVIEW OF PREPARATIONS.
6. SEE ALSO TYPICAL NOTES AND DETAILS.
7. SEE BEAM AND COLUMN SCHEDULES, WALL ELEVATIONS.
8. PROVIDE CONTINUOUS TEMPERATURE STEEL TOP AND BOTTOM, HOOKED AT EDGE OF SLAB AND OPENINGS, IN ADDITION TO REINFORCEMENT SHOWN ON PLAN.
9. PROVIDE TLS FOR ALL SLAB REINFORCEMENT.
10. ADD 2-20T&B CONT. AT PERIMETER BEND BARS TO SUIT SLAB EDGE. SEE SLAB EDGE BARS DETAIL.

Contractor Must Check And Verify All Dimensions On The Job.

Do Not Scale The Drawings.

All Drawings, Specifications And Related Documents Are The Copyright Of The Architect And Must Be Returned Upon Request.

Reproduction Of Drawings, Specifications And Related Documents In Part Or Whole Is Forbidden Without The Architects Written Permission.

This Drawing Is Not To Be Used For Construction Until Signed ByThe Architect.

Date:

DEC.18,2015 DEC.18,2015

stephenson ENGINEERING
2550 Victoria Park Ave. Suite 602
Toronto ON M2J 5A9 | Tel: (416) 635 9970
www.stephenson-eng.com | info@stephenson-eng.com

No	Revision	Date

No	Issued For	Date
7	ISSUED FOR STEEL TENDER	DEC.18,2015
4	BUILDING PERMIT RESUBMISSION	SEPT.21,2015
3	BUILDING PERMIT RESUBMISSION	JULY 22,2015
2	BUILDING PERMIT SUBMISSION	JUNE 12,2015
1	ISSUED FOR WT REVIEW	MAY 01,2015

AQUAVISTA
AT BAYSIDE TORONTO

Drawing Title
LEVEL 6 FLOOR FRAMING PLAN

Project
Hines TRIDEL®
AQUAVISTA
Block 3 - R3 & R4
Merchant's Whart
Toronto, ON

Scale
As indicated

Drawn by
DC

Checked by
IA/BBS

Project No.
20140031

Date
DEC.18,2015

Drawing No.
S1-13

Plot Date: 3/9/2016 10:00:08 AM

LEVEL 7 FRAMING PLAN - WITH BUL AND TLL
1 : 100

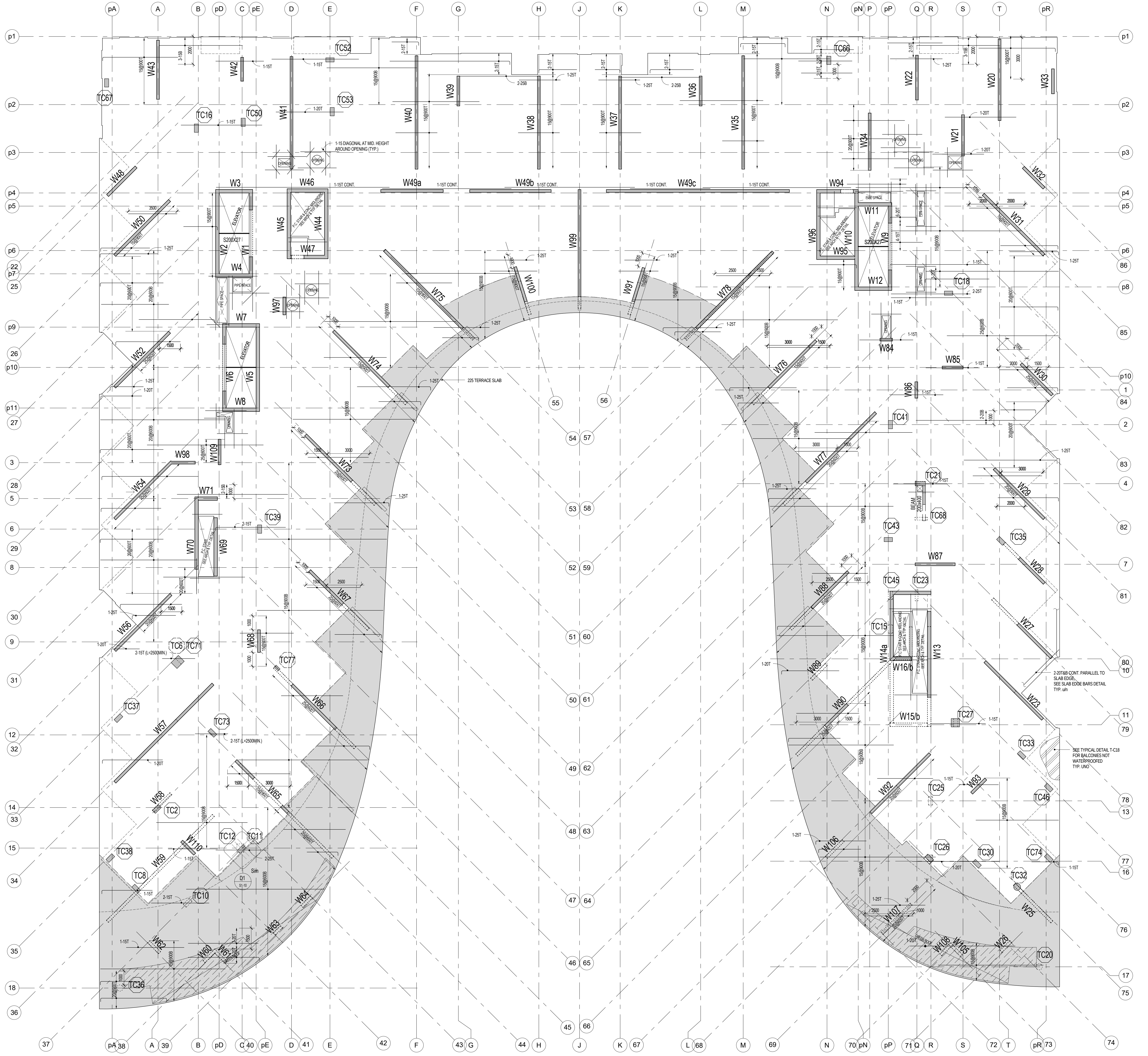

225 TERRACE SLAB
2-20T&B CONT. PARALLEL TO SLAB EDGE, SEE SLAB EDGE BARS DETAIL TYP. u/n
SEE TYPICAL DETAIL T-C18 FOR BALCONIES NOT WATERPROOFED TYP. UNO
1-15 DIAGONAL AT MID. HEIGHT AROUND OPENING (TYP.)
W49a
W49b
W49c
W99
W3
W46
W47
W94
W95
W11
W12
TC52
TC66
TC16
TC50
TC53
TC67
TC18
TC41
TC21
TC68
TC39
TC43
TC35
TC45
TC23
TC15
TC6
TC71
TC77
TC37
TC73
TC27
TC33
TC46
TC25
TC2
TC38
TC12
TC11
TC26
TC30
TC74
TC32
TC8
TC10
TC36
TC20
W85
W84
W86
W87
W13
W14a
W16/b
W15/b
W23
W27
W28
1-15T
15@300B

LEVEL 7 FRAMING PLAN - WITH BLL AND TUL
1 : 100

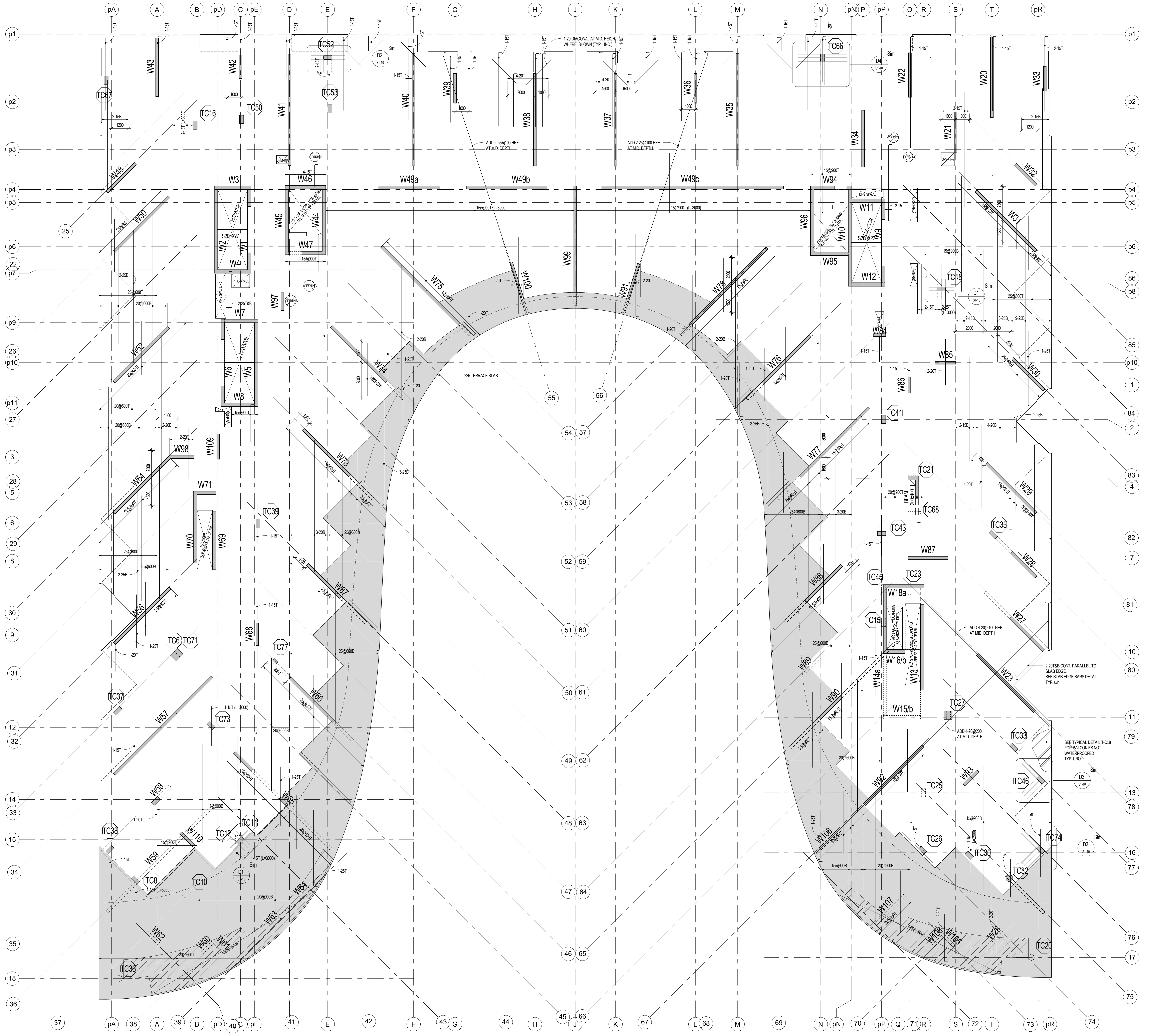

1-20 DIAGONAL AT MID. HEIGHT WHERE SHOWN (TYP. UNO)
ADD 3-25@100 HEE AT MID. DEPTH
225 TERRACE SLAB
ADD 4-20@100 HEE AT MID. DEPTH
ADD 4-30@200 AT MID. DEPTH
SEE TYPICAL DETAIL T-C18 FOR BALCONIES NOT WATERPROOFED TYP. UNO
2-20T&B CONT. PARALLEL TO SLAB EDGE, SEE SLAB EDGE BARS DETAIL TYP. u/n
W49a
W49b
W49c
W99
W18a
W13
W14a
W16/b
W15/b

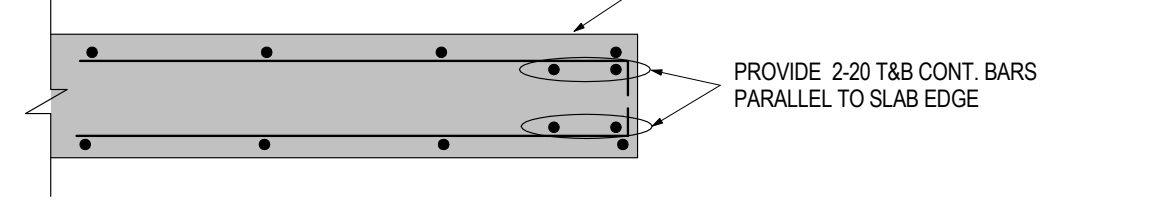

SEE PLAN AND NOTES FOR SLAB REINF. TYP. u/n
PROVIDE 2-20 T&B CONT. BARS PARALLEL TO SLAB EDGE

SLAB EDGE BARS DETAIL
1 : 10

TUL = TOP UPPER LAYER
TLL = TOP LOWER LAYER
BUL = BOTTOM UPPER LAYER
BLL = BOTTOM LOWER LAYER

REINFORCEMENT PLACEMENT DIAGRAM

SLAB:	200 MIN. u/n
INTEGRITY BARS:	3-20M BEW
CONCRETE STRENGTH:	25 MPa
TEMP. STEEL:	15@500 T&B EW
TERRACE SLAB:	225 MIN. u/n
INTEGRITY BARS:	3-20M BEW
CONCRETE STRENGTH:	25 MPa C1
TEMP. STEEL:	15@400 T&B EW

SEE PLAN FOR ADDITIONAL REINFORCEMENT

NOTES:

1. TOP OF STRUCTURAL SLAB TO BE 0.0 mm BELOW FINISHED FLOOR DATUM ELEVATION EXCEPT AS CROSSED AND NOTED. SEE ARCHITECTURAL DRAWINGS FOR DATUM ELEVATION.
2. THE STRUCTURAL SLAB HAS BEEN DESIGNED FOR THE FOLLOWING LIVE LOADS (LL) AND SUPERIMPOSED DEAD LOADS (SDL) IN ADDITION TO THE SELF WEIGHT.

	LL	SDL
SUITES	1.9 kPa	1.25 kPa
TERRACE	4.8 kPa**	6.0 kPa*
STAIRS/LOBBY	4.8 kPa	0.5 kPa
BALCONIES	4.8 kPa**	0.5 kPa
GREEN ROOF***	4.8kPa**	11.2kPa*

* INCLUDES ALLOWANCE FOR SLOPES AND ROOFING MATERIALS
** AN ALLOWANCE FOR SNOW LOAD OF 1.28 kPa HAS BEEN CONSIDERED.
*** INCLUDES ALLOWANCE FOR 8.2 kPa GREEN ROOF DEAD LOAD.

3. CONCRETE COVER FOR TOP AND BOTTOM BARS IN SLABS TO BE 25 mm.
4. APPROVAL MUST BE OBTAINED FROM ENGINEER FOR ALL OPENINGS OTHER THAN THOSE SHOWN ON PLAN.
5. THE PROJECT SUPERINTENDENT MUST CONTACT THIS OFFICE 24 HOURS PRIOR TO PLACING STRUCTURAL CONCRETE FOR A REVIEW OF PREPARATIONS.
6. SEE ALSO TYPICAL NOTES AND DETAILS.
7. SEE BEAM AND COLUMN SCHEDULES, WALL ELEVATIONS.
8. PROVIDE CONTINUOUS TEMPERATURE STEEL TOP AND BOTTOM, HOOKED AT EDGE OF SLAB AND OPENINGS, IN ADDITION TO REINFORCEMENT SHOWN ON PLAN.
9. PROVIDE TLS FOR ALL SLAB REINFORCEMENT.
10. ADD 2-20T&B CONT. AT PERIMETER BEND BARS TO SUIT SLAB EDGE. SEE SLAB EDGE BARS DETAIL.

Contractor Must Check And Verify All Dimensions On The Job.

Do Not Scale The Drawings.

All Drawings, Specifications And Related Documents Are The Copyright Of The Architect And Must Be Returned Upon Request.

Reproduction Of Drawings, Specifications And Related Documents In Part Or Whole Is Forbidden Without The Architects Written Permission.

This Drawing Is Not To Be Used For Construction Until Signed ByThe Architect.

Date:

DEC.18,2015 DEC.18,2015

stephenson
ENGINEERING
2550 Victoria Park Ave. Suite 602
Toronto ON M2J 5A9 | Tel: (416) 635 9970
www.stephenson-eng.com | info@stephenson-eng.com

No	Revision	Date
5	GREEN ROOF LOAD REVSION	NOV.16,2015

No	Issued For	Date
7	ISSUED FOR STEEL TENDER	DEC.18,2015
4	BUILDING PERMIT RESUBMISSION	SEPT.21,2015
3	BUILDING PERMIT RESUBMISSION	JULY 22,2015
2	BUILDING PERMIT SUBMISSION	JUNE 12,2015
1	ISSUED FOR WT REVIEW	MAY 01,2015

AQUAVISTA
AT BAYSIDE TORONTO

Drawing Title
LEVEL 7 FLOOR FRAMING PLAN

Project
Hines TRIDEL®
AQUAVISTA
Block 3 - R3 & R4
Merchant's Whart
Toronto, ON

Scale
As indicated
Drawn by
DC
Checked by
IA/BBS
Project No.
20140031
Date
DEC.18,2015
Drawing No.
S1-14

Plot Date: 3/9/2016 10:00:24 AM

LEVEL 8 FRAMING PLAN - WITH BUL AND TLL
1 : 100

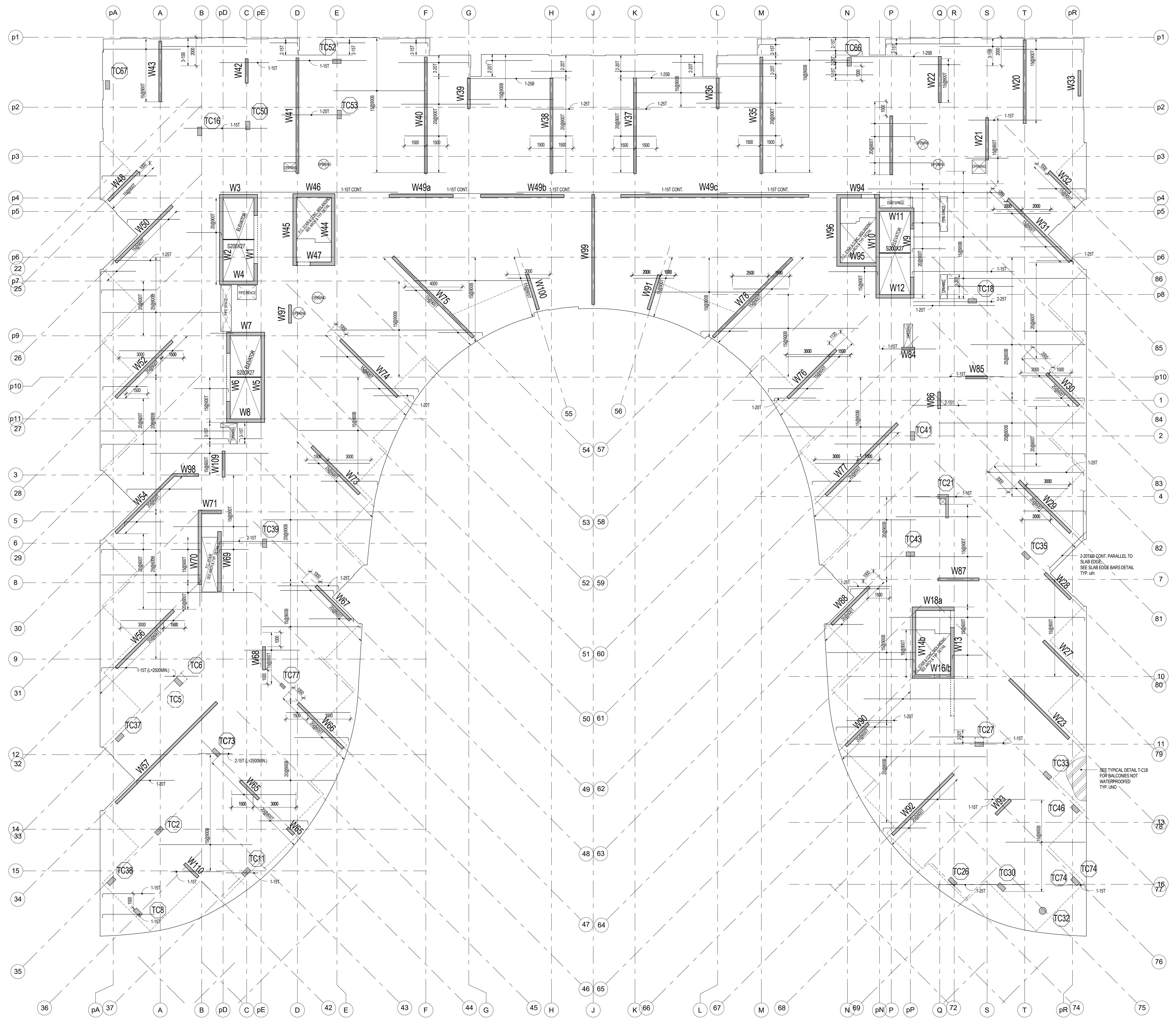
W3
W46
W49a
W49b
W49c
W94
W99
W95
W57
W71
W110
TC67
TC16
TC50
TC52
TC53
TC66
TC18
TC41
TC21
TC43
TC35
TC27
TC33
TC46
TC26
TC30
TC74
TC32
2-20T&B CONT. PARALLEL TO SLAB EDGE. SEE SLAB EDGE BARS DETAIL TYP. u/n
SEE TYPICAL DETAIL T-C18 FOR BALCONIES NOT WATERPROOFED TYP. UNO

LEVEL 8 FRAMING PLAN - WITH BLL AND TUL
1 : 100

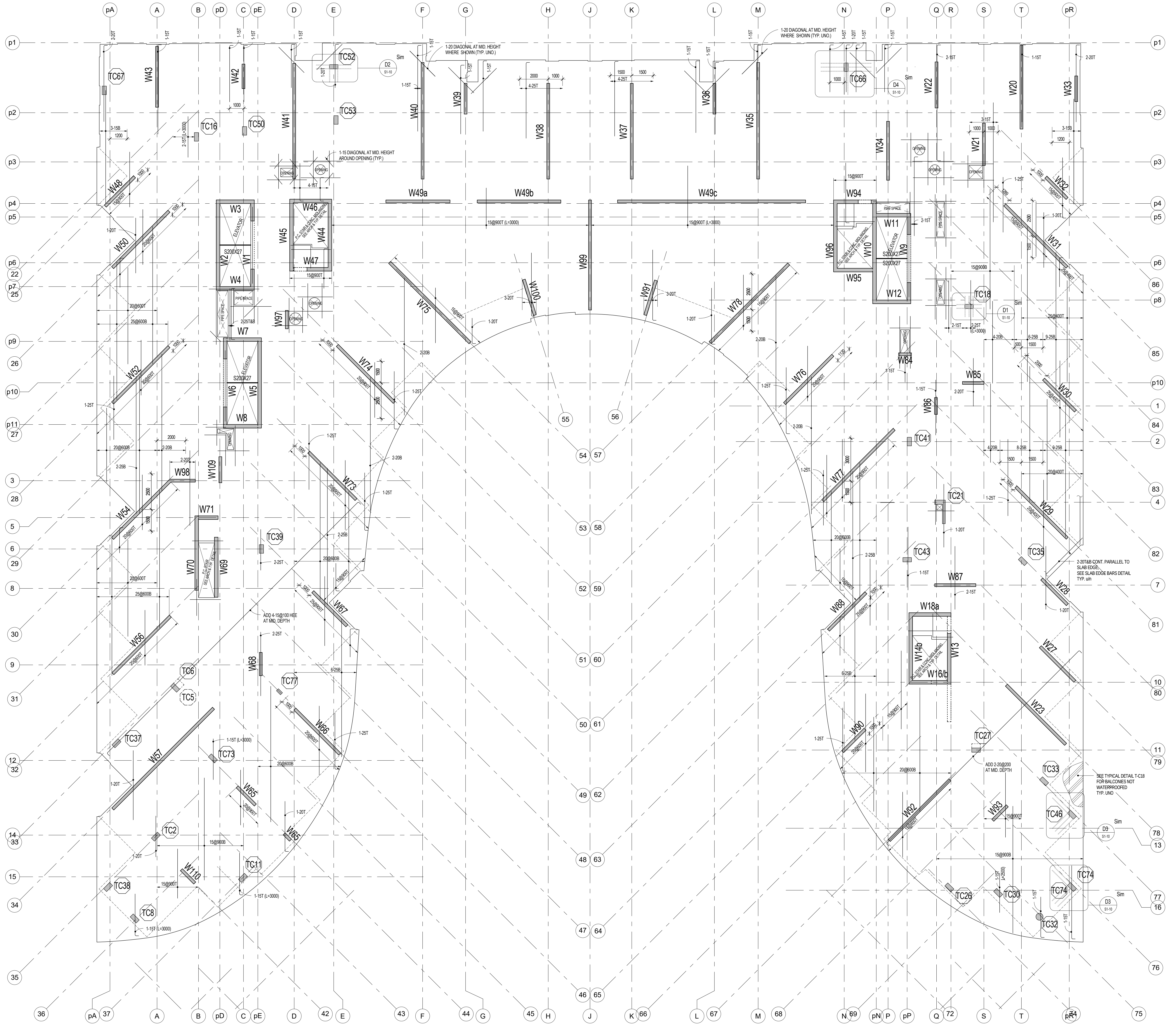
W3
W46
W49a
W49b
W49c
W94
W99
W95
W57
W71
W110
1-20 DIAGONAL AT MID. HEIGHT WHERE SHOWN (TYP. UNO.)
1-15 DIAGONAL AT MID. HEIGHT AROUND OPENING (TYP.)
2-20T&B CONT. PARALLEL TO SLAB EDGE. SEE SLAB EDGE BARS DETAIL TYP. u/n
SEE TYPICAL DETAIL T-C18 FOR BALCONIES NOT WATERPROOFED TYP. UNO

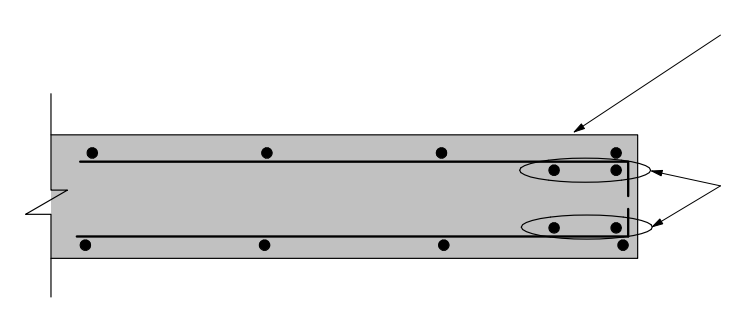
SEE PLAN AND NOTES FOR SLAB REINF. TYP. u/n
PROVIDE 2-20 T&B CONT. BARS PARALLEL TO SLAB EDGE

SLAB EDGE BARS DETAIL
1 : 10

TUL = TOP UPPER LAYER
TLL = TOP LOWER LAYER
BUL = BOTTOM UPPER LAYER
BLL = BOTTOM LOWER LAYER

REINFORCEMENT PLACEMENT DIAGRAM

SLAB:	200 MIN. u/n
INTEGRITY BARS:	3-20M BEW
CONCRETE STRENGTH:	25 MPa
TEMP. STEEL:	15@500 T&B EW

SEE PLAN FOR ADDITIONAL REINFORCEMENT

NOTES:

1. TOP OF STRUCTURAL SLAB TO BE 0.0 mm BELOW FINISHED FLOOR DATUM ELEVATION EXCEPT AS CROSSED AND NOTED. SEE ARCHITECTURAL DRAWINGS FOR DATUM ELEVATION.
2. THE STRUCTURAL SLAB HAS BEEN DESIGNED FOR THE FOLLOWING LIVE LOADS (LL) AND SUPERIMPOSED DEAD LOADS (SDL) IN ADDITION TO THE SELF WEIGHT.

	LL	SDL
SUITES	1.9 kPa	1.25 kPa
TERRACE	4.8 kPa**	6.0 kPa*
STAIRS/LOBBY	4.8 kPa	0.5 kPa
BALCONIES	4.8 kPa**	0.5 kPa

* INCLUDES ALLOWANCE FOR SLOPES AND ROOFING MATERIALS
** AN ALLOWANCE FOR SNOW LOAD OF 1.28 kPa HAS BEEN CONSIDERED.

3. CONCRETE COVER FOR TOP AND BOTTOM BARS IN SLABS TO BE 25 mm.
4. APPROVAL MUST BE OBTAINED FROM ENGINEER FOR ALL OPENINGS OTHER THAN THOSE SHOWN ON PLAN.
5. THE PROJECT SUPERINTENDENT MUST CONTACT THIS OFFICE 24 HOURS PRIOR TO PLACING STRUCTURAL CONCRETE FOR A REVIEW OF PREPARATIONS.
6. SEE ALSO TYPICAL NOTES AND DETAILS.
7. SEE BEAM AND COLUMN SCHEDULES, WALL ELEVATIONS.
8. PROVIDE CONTINUOUS TEMPERATURE STEEL TOP AND BOTTOM, HOOKED AT EDGE OF SLAB AND OPENINGS, IN ADDITION TO REINFORCEMENT SHOWN ON PLAN.
9. PROVIDE TLS FOR ALL SLAB REINFORCEMENT.
10. ADD 2-20T&B CONT. AT PERIMETER BEND BARS TO SUIT SLAB EDGE. SEE SLAB EDGE BARS DETAIL.

Contractor Must Check And Verify All Dimensions On The Job.

Do Not Scale The Drawings.

All Drawings, Specifications And Related Documents Are The Copyright Of The Architect And Must Be Returned Upon Request.

Reproduction Of Drawings, Specifications And Related Documents In Part Or Whole Is Forbidden Without The Architects Written Permission.

This Drawing Is Not To Be Used For Construction Until Signed ByThe Architect.

Date:

DEC.18,2015 DEC.18,2015

stephenson ENGINEERING
2550 Victoria Park Ave. Suite 602
Toronto ON M2J 5A9 | Tel: (416) 635 9970
www.stephenson-eng.com | info@stephenson-eng.com

No	Revision	Date

No	Issued For	Date
7	ISSUED FOR STEEL TENDER	DEC.18,2015
4	BUILDING PERMIT RESUBMISSION	SEPT.21,2015
3	BUILDING PERMIT RESUBMISSION	JULY 22,2015
2	BUILDING PERMIT SUBMISSION	JUNE 12,2015
1	ISSUED FOR WT REVIEW	MAY 01,2015

AQUAVISTA
AT BAYSIDE TORONTO

Drawing Title
LEVEL 8 FLOOR FRAMING PLAN

Project
Hines TRIDEL®
AQUAVISTA
Block 3 - R3 & R4
Merchant's Whart
Toronto, ON

Scale
As indicated

Drawn by
DC

Checked by
IA/BBS

Project No.
20140031

Date
DEC.18,2015

Drawing No.
S1-15

Plot Date: 3/9/2016 10:00:27 AM

LEVEL 9 FRAMING PLAN - WITH BUL AND TLL
1 : 100

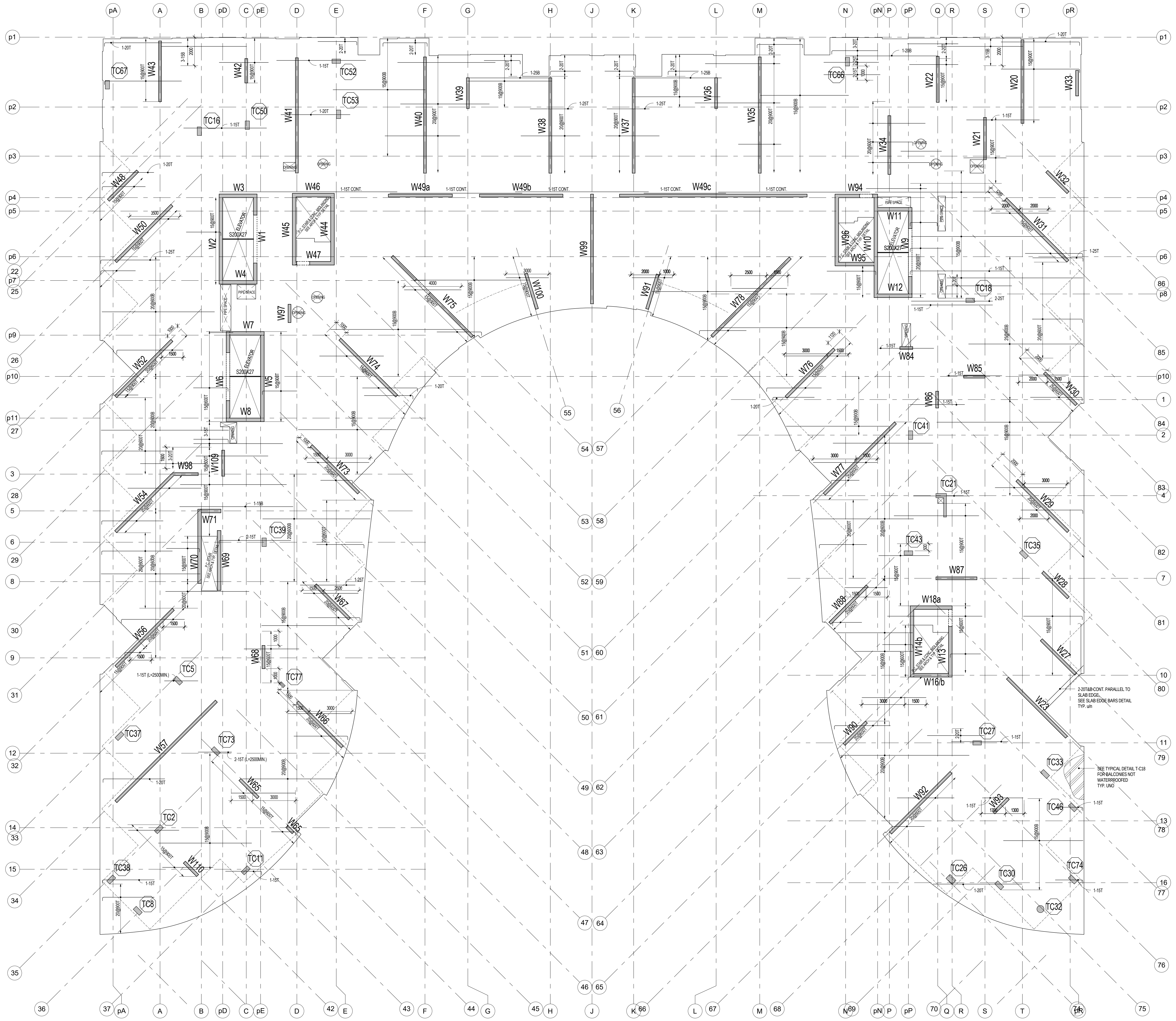
pA
A
B
pD
C
pE
D
E
F
G
H
J
K
L
M
N
pN
P
pP
Q
R
S
T
pR
p1
p2
p3
p4
p5
p6
p7
p8
p9
p10
p11
W43
W42
W41
W40
W39
W38
W37
W36
W35
W22
W20
W33
W34
W21
W32
W31
W3
W46
W49a
W49b
W49c
W94
W2
W1
W45
W44
W47
W4
W11
W9
W10
W12
W95
W96
W99
W75
W100
W91
W78
W7
W97
W5
W6
W8
W74
W76
W84
W85
W86
W30
W52
W48
W50
W98
W109
W73
W77
W29
W54
W71
W70
W69
W28
W87
W18a
W14b
W13
W16b
W27
W23
W67
W89
W68
W56
W66
W90
W57
W65
W92
W93
W110
W55
TC67
TC52
TC53
TC50
TC16
TC66
TC18
TC41
TC21
TC43
TC35
TC39
TC5
TC77
TC37
TC73
TC27
TC33
TC46
TC2
TC11
TC38
TC8
TC26
TC30
TC74
TC32
1-15T CONT.
S200X27
2-20T&B CONT. PARALLEL TO SLAB EDGE, SEE SLAB EDGE BARS DETAIL TYP. u/n
SEE TYPICAL DETAIL T-C18 FOR BALCONIES NOT WATERRPROOFED TYP. UNO
15@900T
15@900B
1-15T
1300

LEVEL 9 FRAMING PLAN - WITH BLL AND TUL
1 : 100

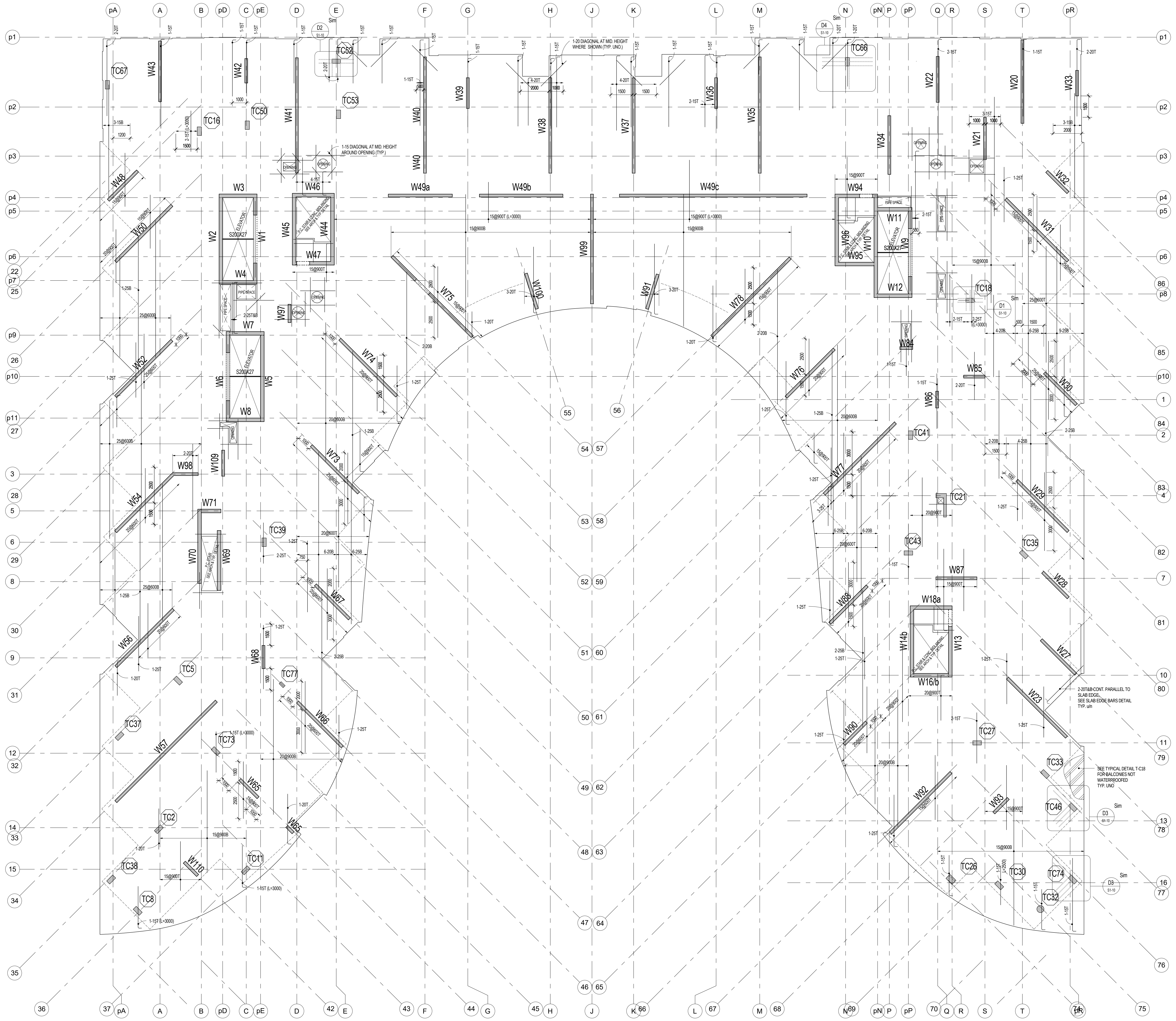
1-20 DIAGONAL AT MID. HEIGHT WHERE SHOWN (TYP. UNO.)
1-15 DIAGONAL AT MID. HEIGHT AROUND OPENING (TYP.)
OPENING
STAIR & CONC. MIDLANDING SEE ARCH & TYP. DETAIL
4-20T
4-15T
2-15T
1-15T
2000
1000
1500
500
W36
W41
W40
W46
W49a
W49b
W49c
TC53
2-20T&B CONT. PARALLEL TO SLAB EDGE, SEE SLAB EDGE BARS DETAIL TYP. u/n
SEE TYPICAL DETAIL T-C18 FOR BALCONIES NOT WATERRPROOFED TYP. UNO

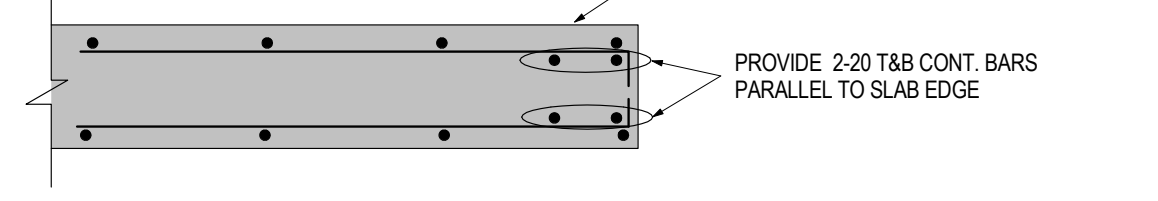
SEE PLAN AND NOTES FOR SLAB REINF. TYP. u/n
PROVIDE 2-20 T&B CONT. BARS PARALLEL TO SLAB EDGE

SLAB EDGE BARS DETAIL
1 : 10

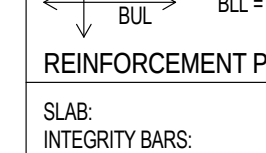
TUL
BLL
TLL
BUL

TUL = TOP UPPER LAYER
TLL = TOP LOWER LAYER
BUL = BOTTOM UPPER LAYER
BLL = BOTTOM LOWER LAYER

REINFORCEMENT PLACEMENT DIAGRAM

SLAB:	200 MIN. u/n
INTEGRITY BARS:	3-20M BEW
CONCRETE STRENGTH:	25 MPa
TEMP. STEEL:	15@500 T&B EW

SEE PLAN FOR ADDITIONAL REINFORCEMENT

NOTES:

1. TOP OF STRUCTURAL SLAB TO BE 0.0 mm BELOW FINISHED FLOOR DATUM ELEVATION EXCEPT AS CROSSED AND NOTED. SEE ARCHITECTURAL DRAWINGS FOR DATUM ELEVATION.
2. THE STRUCTURAL SLAB HAS BEEN DESIGNED FOR THE FOLLOWING LIVE LOADS (LL) AND SUPERIMPOSED DEAD LOADS (SDL) IN ADDITION TO THE SELF WEIGHT.

	LL	SDL
SUITES	1.9 kPa	1.25 kPa
TERRACE	4.8 kPa**	6.0 kPa*
STAIRS/LOBBY	4.8 kPa	0.5 kPa
BALCONIES	4.8 kPa**	0.5 kPa

* INCLUDES ALLOWANCE FOR SLOPES AND ROOFING MATERIALS
** AN ALLOWANCE FOR SNOW LOAD OF 1.28 kPa HAS BEEN CONSIDERED.

3. CONCRETE COVER FOR TOP AND BOTTOM BARS IN SLABS TO BE 25 mm.
4. APPROVAL MUST BE OBTAINED FROM ENGINEER FOR ALL OPENINGS OTHER THAN THOSE SHOWN ON PLAN.
5. THE PROJECT SUPERINTENDENT MUST CONTACT THIS OFFICE 24 HOURS PRIOR TO PLACING STRUCTURAL CONCRETE FOR A REVIEW OF PREPARATIONS.
6. SEE ALSO TYPICAL NOTES AND DETAILS.
7. SEE BEAM AND COLUMN SCHEDULES, WALL ELEVATIONS.
8. PROVIDE CONTINUOUS TEMPERATURE STEEL TOP AND BOTTOM, HOOKED AT EDGE OF SLAB AND OPENINGS, IN ADDITION TO REINFORCEMENT SHOWN ON PLAN.
9. PROVIDE TLS FOR ALL SLAB REINFORCEMENT.
10. ADD 2-20T&B CONT. AT PERIMETER BEND BARS TO SUIT SLAB EDGE. SEE SLAB EDGE BARS DETAIL.

Contractor Must Check And Verify All Dimensions On The Job.

Do Not Scale The Drawings.

All Drawings, Specifications And Related Documents Are The Copyright Of The Architect And Must Be Returned Upon Request.

Reproduction Of Drawings, Specifications And Related Documents In Part Or Whole Is Forbidden Without The Architects Written Permission.

This Drawing Is Not To Be Used For Construction Until Signed ByThe Architect.

Date:

DEC.18,2015 DEC.18,2015

stephenson ENGINEERING
2550 Victoria Park Ave. Suite 602
Toronto ON M2J 5A9 | Tel: (416) 635 9970
www.stephenson-eng.com | info@stephenson-eng.com

No	Revision	Date

No	Issued For	Date
7	ISSUED FOR STEEL TENDER	DEC.18,2015
4	BUILDING PERMIT RESUBMISSION	SEPT.21,2015
3	BUILDING PERMIT RESUBMISSION	JULY 22,2015
2	BUILDING PERMIT SUBMISSION	JUNE 12,2015
1	ISSUED FOR WT REVIEW	MAY 01,2015

AQUAVISTA
AT BAYSIDE TORONTO

Drawing Title
LEVEL 9 FLOOR FRAMING PLAN

Project
Hines TRIDEL®
AQUAVISTA
Block 3 - R3 & R4
Merchant's Whart
Toronto, ON

Scale
As indicated
Drawn by
DC
Checked by
IA/BBS
Project No.
20140031
Date
DEC.18,2015
Drawing No.
S1-16

Plot Date: 3/9/2016 10:00:31 AM

LEVEL 10 FRAMING PLAN - WITH BUL AND TLL
1 : 100

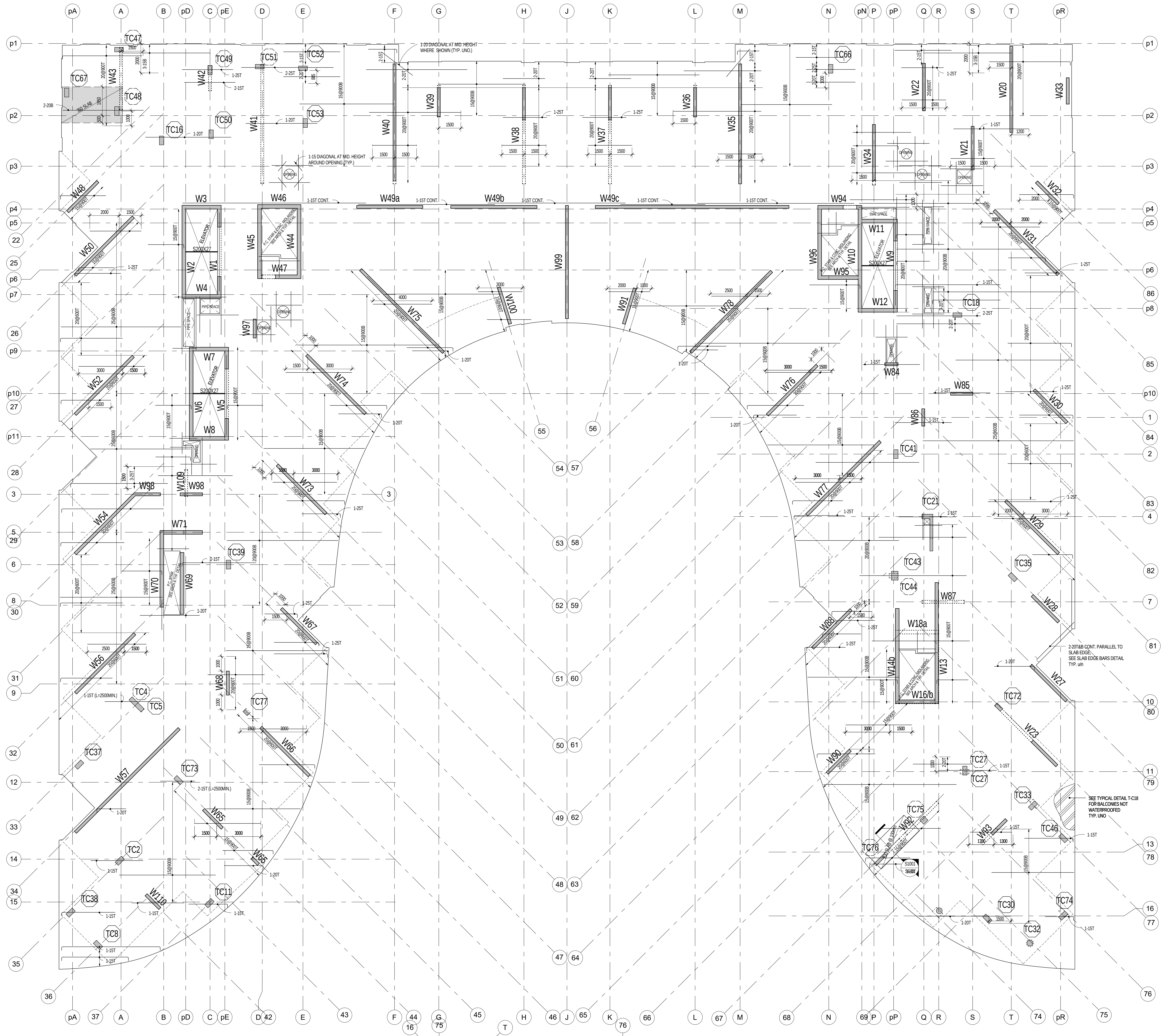
1-20 DIAGONAL AT MID. HEIGHT WHERE SHOWN (TYP. UNO.)
1-15 DIAGONAL AT MID. HEIGHT AROUND OPENING (TYP.)
W49a
W49b
W49c
1-15T CONT.
2-20T&B CONT. PARALLEL TO SLAB EDGE, SEE SLAB EDGE BARS DETAIL TYP. u/n
SEE TYPICAL DETAIL T-C18 FOR BALCONIES NOT WATERPROOFED TYP. UNO

LEVEL 10 FRAMING PLAN - WITH BLL AND TUL
1 : 100

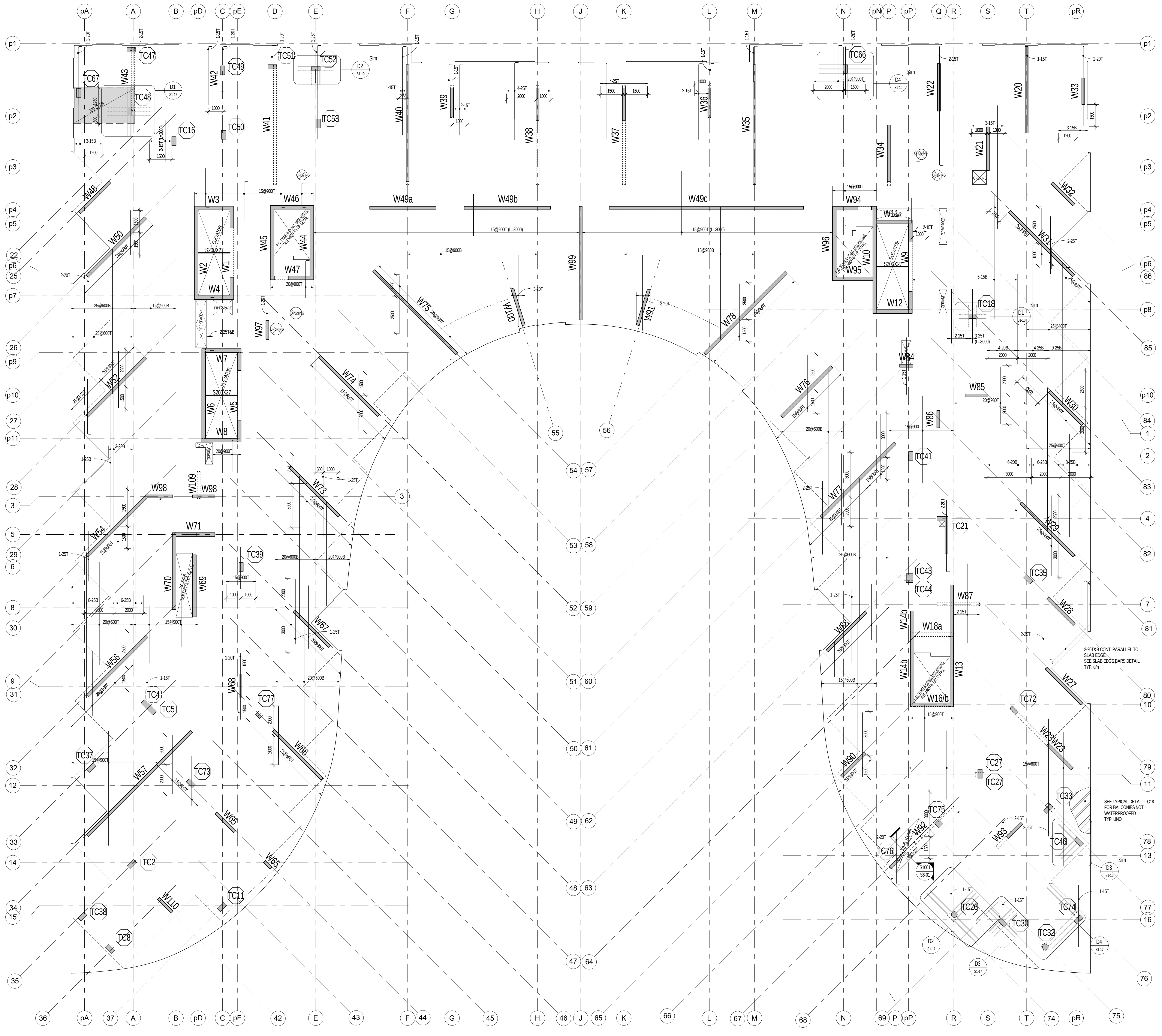
W49a
W49b
W49c
2-20T&B CONT. PARALLEL TO SLAB EDGE, SEE SLAB EDGE BARS DETAIL TYP. u/n
SEE TYPICAL DETAIL T-C18 FOR BALCONIES NOT WATERPROOFED TYP. UNO

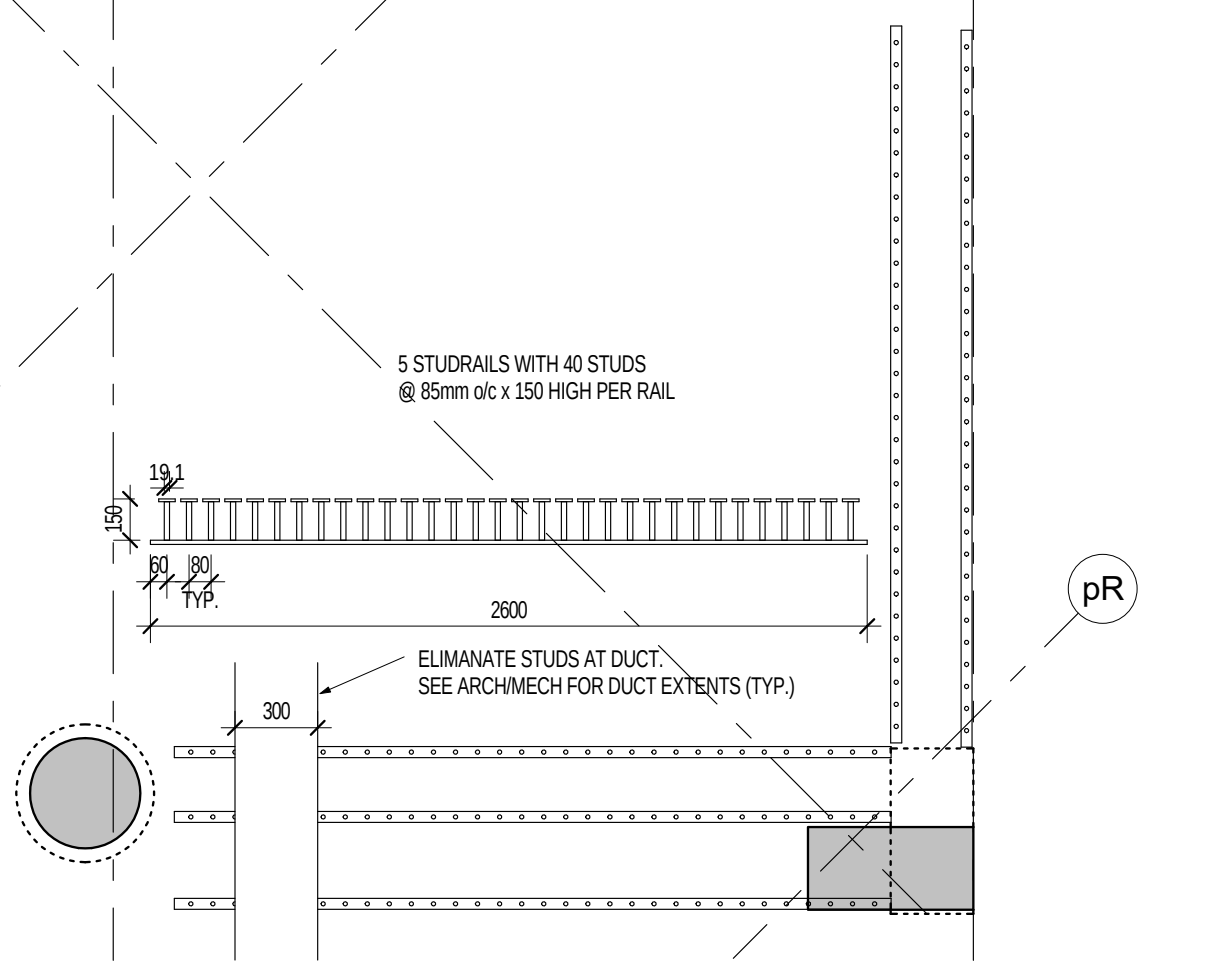
5 STUDRAILS WITH 40 STUDS
@ 85mm o/c x 150 HIGH PER RAIL
19.1
150
60
80
TYP.
2600
ELIMANATE STUDS AT DUCT.
SEE ARCH/MECH FOR DUCT EXTENTS (TYP.)
300
pR
76

D4 S1-17 PLAN DETAIL
1 : 25

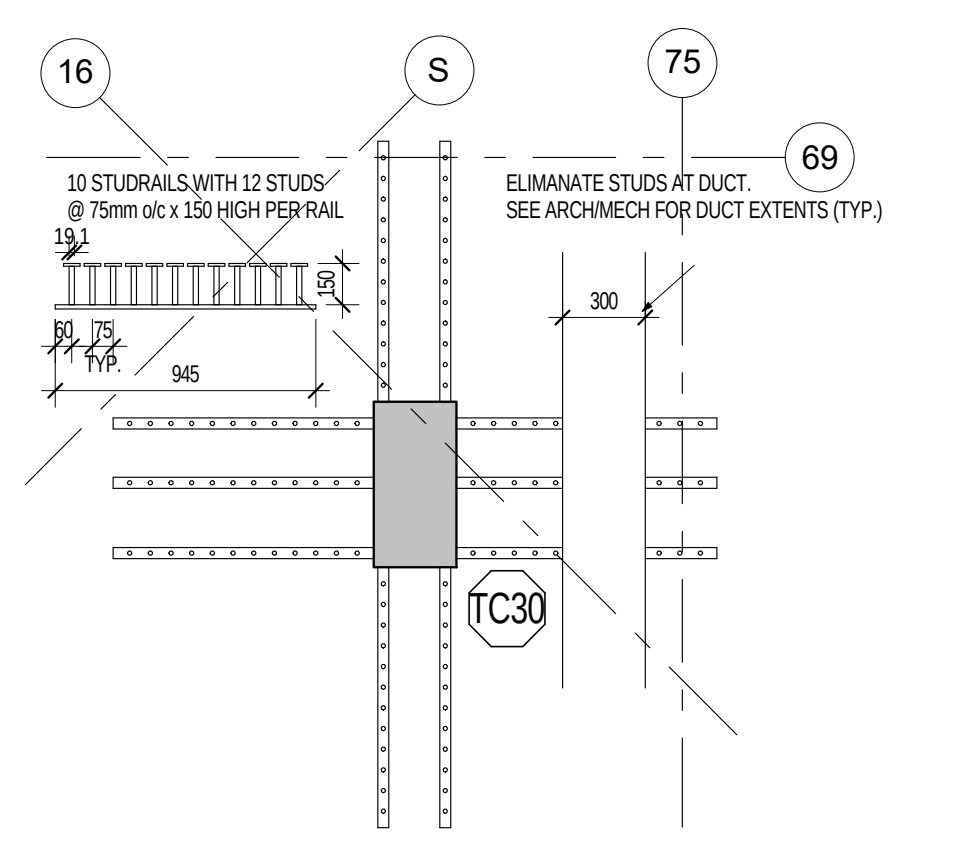
16
S
75
69
10 STUDRAILS WITH 12 STUDS
@ 75mm o/c x 150 HIGH PER RAIL
ELIMANATE STUDS AT DUCT.
SEE ARCH/MECH FOR DUCT EXTENTS (TYP.)
19.1
150
60
75
TYP.
945
300
TC30

D3 S1-17 PLAN DETAIL
1 : 25

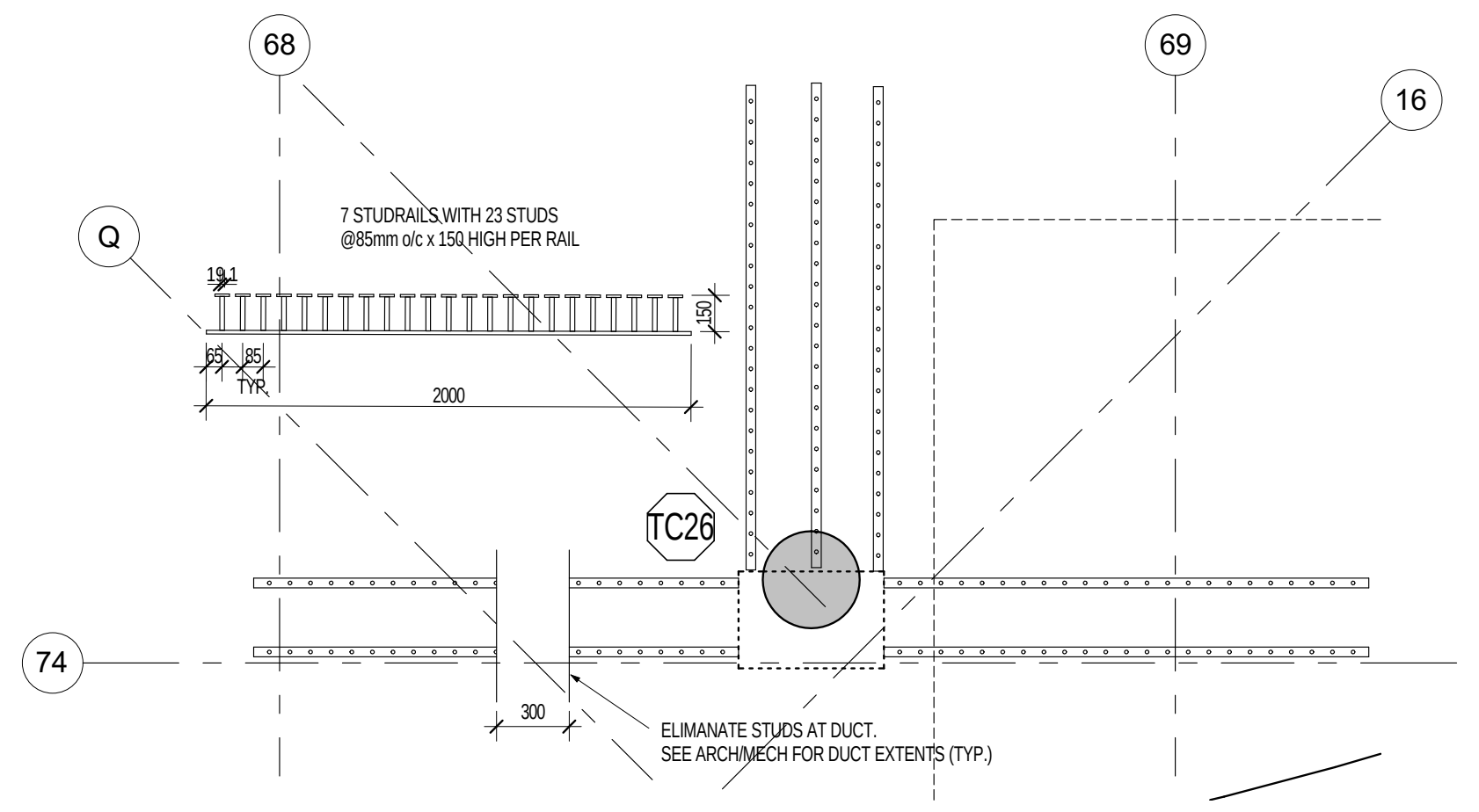
68
69
16
Q
74
7 STUDRAILS WITH 23 STUDS
@85mm o/c x 150 HIGH PER RAIL
19.1
150
65
85
TYP.
2000
TC26
300
ELIMANATE STUDS AT DUCT.
SEE ARCH/MECH FOR DUCT EXTENTS (TYP.)

D2 S1-17 PLAN DETAIL
1 : 25

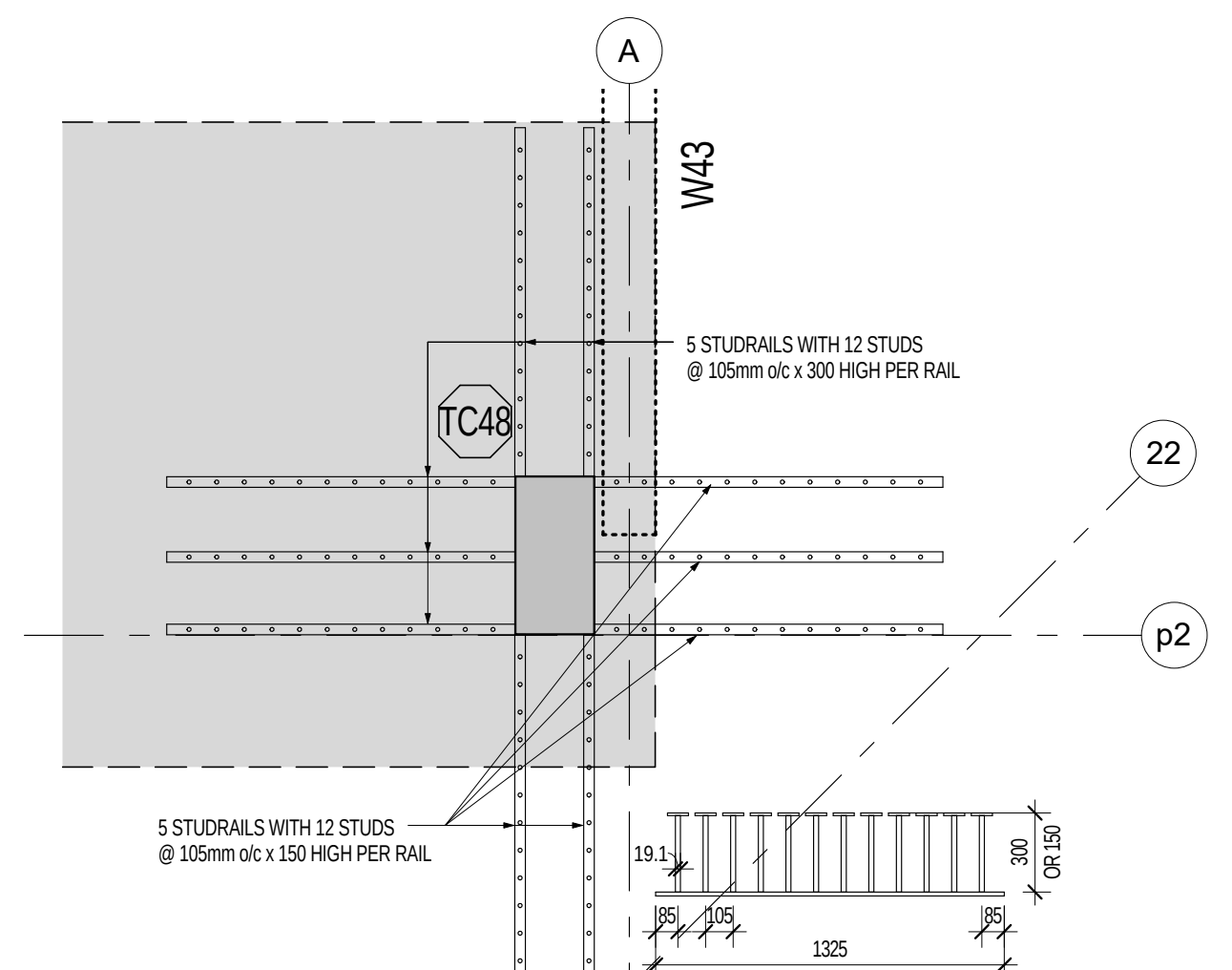
A
W43
5 STUDRAILS WITH 12 STUDS
@ 105mm o/c x 300 HIGH PER RAIL
TC48
22
p2
5 STUDRAILS WITH 12 STUDS
@ 105mm o/c x 150 HIGH PER RAIL
19.1
300
OR 150
85
105
85
1325

D1 S1-17 PLAN DETAIL
1 : 25

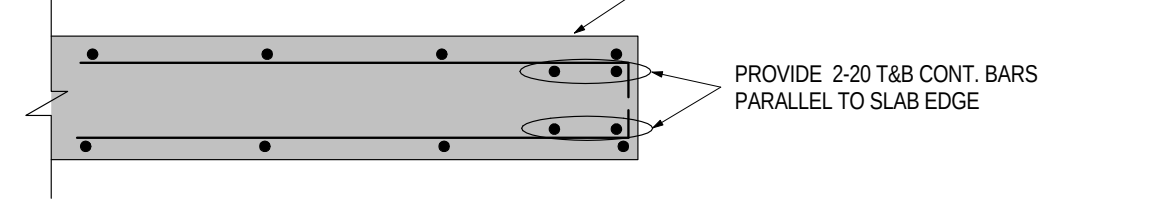

SEE PLAN AND NOTES FOR SLAB REINF. TYP. u/n

PROVIDE 2-20 T&B CONT. BARS PARALLEL TO SLAB EDGE

SLAB EDGE BARS DETAIL
1 : 10

TUL = TOP UPPER LAYER
TLL = TOP LOWER LAYER
BUL = BOTTOM UPPER LAYER
BLL = BOTTOM LOWER LAYER

REINFORCEMENT PLACEMENT DIAGRAM

SLAB:	200 MIN. u/n
INTEGRITY BARS:	3-20M BEW
CONCRETE STRENGTH:	25 MPa
TEMP. STEEL:	15@500 T&B EW
SLAB:	350 MIN.
INTEGRITY BARS:	3-30M BEW
CONCRETE STRENGTH:	35 MPa
TEMP. STEEL:	15@280 T&B EW

SEE PLAN FOR ADDITIONAL REINFORCEMENT

NOTES:

1. TOP OF STRUCTURAL SLAB TO BE 0.0 mm BELOW FINISHED FLOOR DATUM ELEVATION EXCEPT AS CROSSED AND NOTED. SEE ARCHITECTURAL DRAWINGS FOR DATUM ELEVATION.
2. THE STRUCTURAL SLAB HAS BEEN DESIGNED FOR THE FOLLOWING LIVE LOADS (LL) AND SUPERIMPOSED DEAD LOADS (SDL) IN ADDITION TO THE SELF WEIGHT.

	LL	SDL
SUITES	1.9 kPa	1.25 kPa
TERRACE	4.8 kPa**	6.0 kPa*
STAIRS/LOBBY	4.8 kPa	0.5 kPa
BALCONIES	4.8 kPa**	0.5 kPa

* INCLUDES ALLOWANCE FOR SLOPES AND ROOFING MATERIALS
** AN ALLOWANCE FOR SNOW LOAD OF 1.28 kPa HAS BEEN CONSIDERED.

3. CONCRETE COVER FOR TOP AND BOTTOM BARS IN SLABS TO BE 25 mm.
4. APPROVAL MUST BE OBTAINED FROM ENGINEER FOR ALL OPENINGS OTHER THAN THOSE SHOWN ON PLAN.
5. THE PROJECT SUPERINTENDENT MUST CONTACT THIS OFFICE 24 HOURS PRIOR TO PLACING STRUCTURAL CONCRETE FOR A REVIEW OF PREPARATIONS.
6. SEE ALSO TYPICAL NOTES AND DETAILS.
7. SEE BEAM AND COLUMN SCHEDULES, WALL ELEVATIONS.
8. PROVIDE CONTINUOUS TEMPERATURE STEEL TOP AND BOTTOM, HOOKED AT EDGE OF SLAB AND OPENINGS, IN ADDITION TO REINFORCEMENT SHOWN ON PLAN.
9. PROVIDE TLS FOR ALL SLAB REINFORCEMENT.
10. ADD 2-20T&B CONT. AT PERIMETER BEND BARS TO SUIT SLAB EDGE. SEE SLAB EDGE BARS DETAIL.

Contractor Must Check And Verify All Dimensions On The Job.

Do Not Scale The Drawings.

All Drawings, Specifications And Related Documents Are The Copyright Of The Architect And Must Be Returned Upon Request.

Reproduction Of Drawings, Specifications And Related Documents In Part Or Whole Is Forbidden Without The Architects Written Permission.

This Drawing Is Not To Be Used For Construction Until Signed ByThe Architect.

Date:

DEC.18,2015 DEC.18,2015

stephenson ENGINEERING
2550 Victoria Park Ave. Suite 602
Toronto ON M2J 5A9 | Tel: (416) 635 9970
www.stephenson-eng.com | info@stephenson-eng.com

No	Revision	Date

No	Issued For	Date
7	ISSUED FOR STEEL TENDER	DEC.18,2015
4	BUILDING PERMIT RESUBMISSION	SEPT.21,2015
3	BUILDING PERMIT RESUBMISSION	JULY 22,2015
2	BUILDING PERMIT SUBMISSION	JUNE 12,2015
1	ISSUED FOR WT REVIEW	MAY 01,2015

AQUAVISTA
AT BAYSIDE TORONTO

Drawing Title
LEVEL 10 FLOOR FRAMING PLAN

Project
Hines TRIDEL®
AQUAVISTA
Block 3 - R3 & R4
Merchant's Whart
Toronto, ON

Scale
As indicated

Drawn by
DC

Checked by
IA/BBS

Project No.
20140031

Date
DEC.18,2015

Drawing No.
S1-17

Plot Date: 3/9/2016 11:13:43 AM

LEVEL 11 FRAMING PLAN - WITH BUL AND TLL
1 : 100

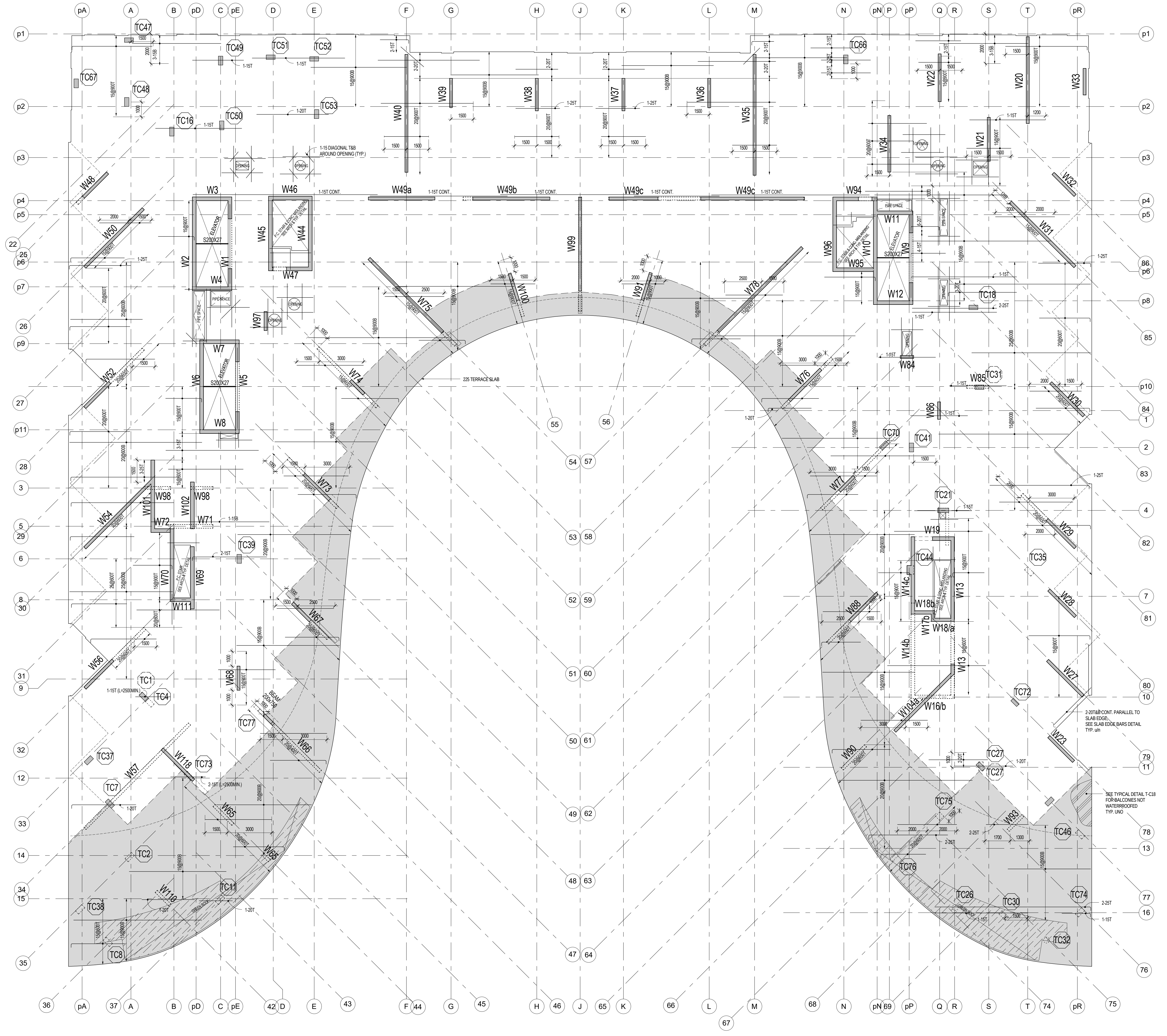
225 TERRACE SLAB
1-15 DIAGONAL T&B AROUND OPENING (TYP.)
2-20T&B CONT. PARALLEL TO SLAB EDGE. SEE SLAB EDGE BARS DETAIL TYP. u/n
SEE TYPICAL DETAIL T-C8 FOR BALCONIES NOT WATERPROOFED TYP. UNO

LEVEL 11 FRAMING PLAN WITH BLL AND TUL
1 : 100

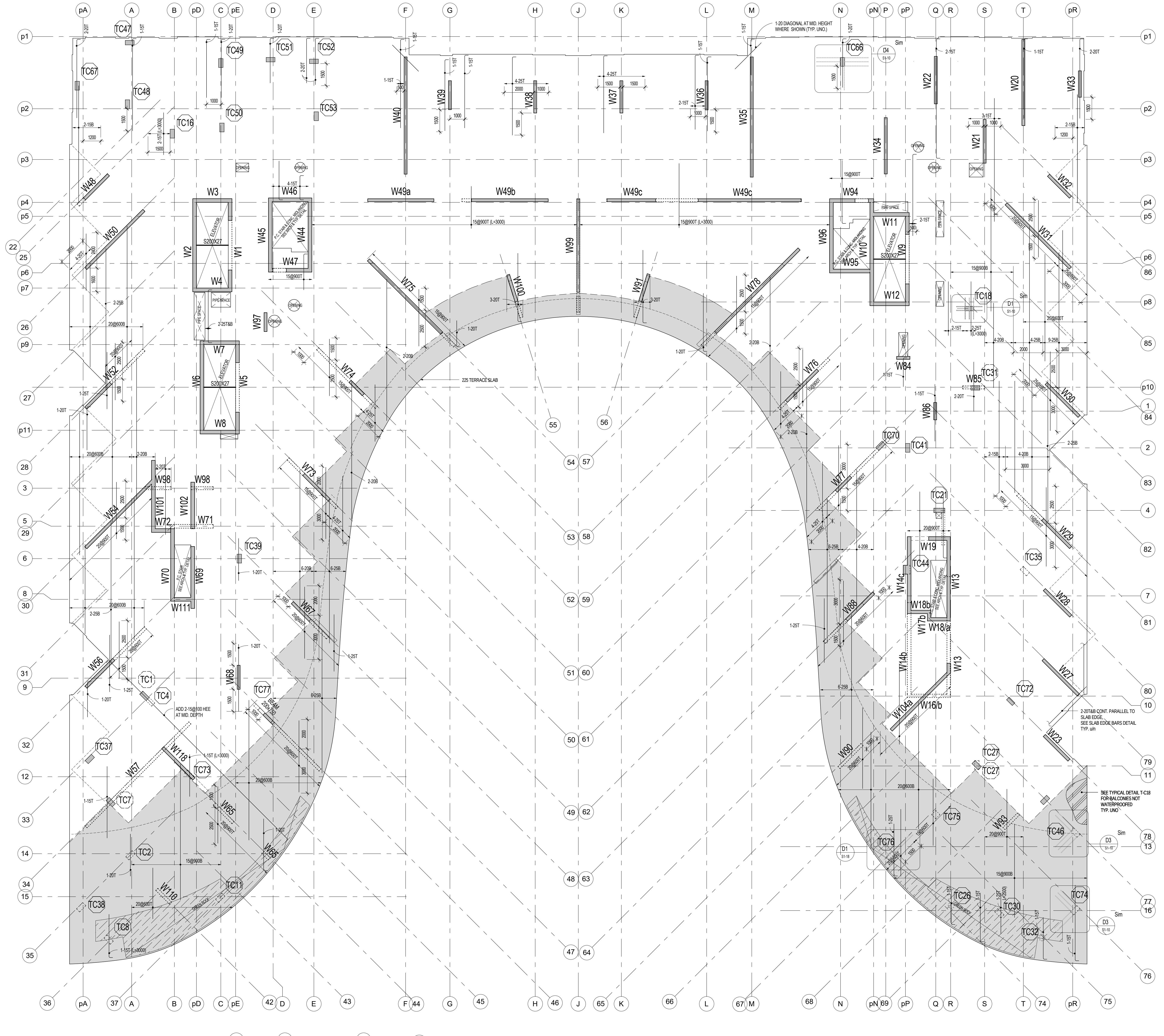
1-20 DIAGONAL AT MID. HEIGHT WHERE SHOWN (TYP. UNO)
225 TERRACE SLAB
ADD 2-15@150 HEE AT MID. DEPTH
SEE TYPICAL DETAIL T-C8 FOR BALCONIES NOT WATERPROOFED TYP. UNO

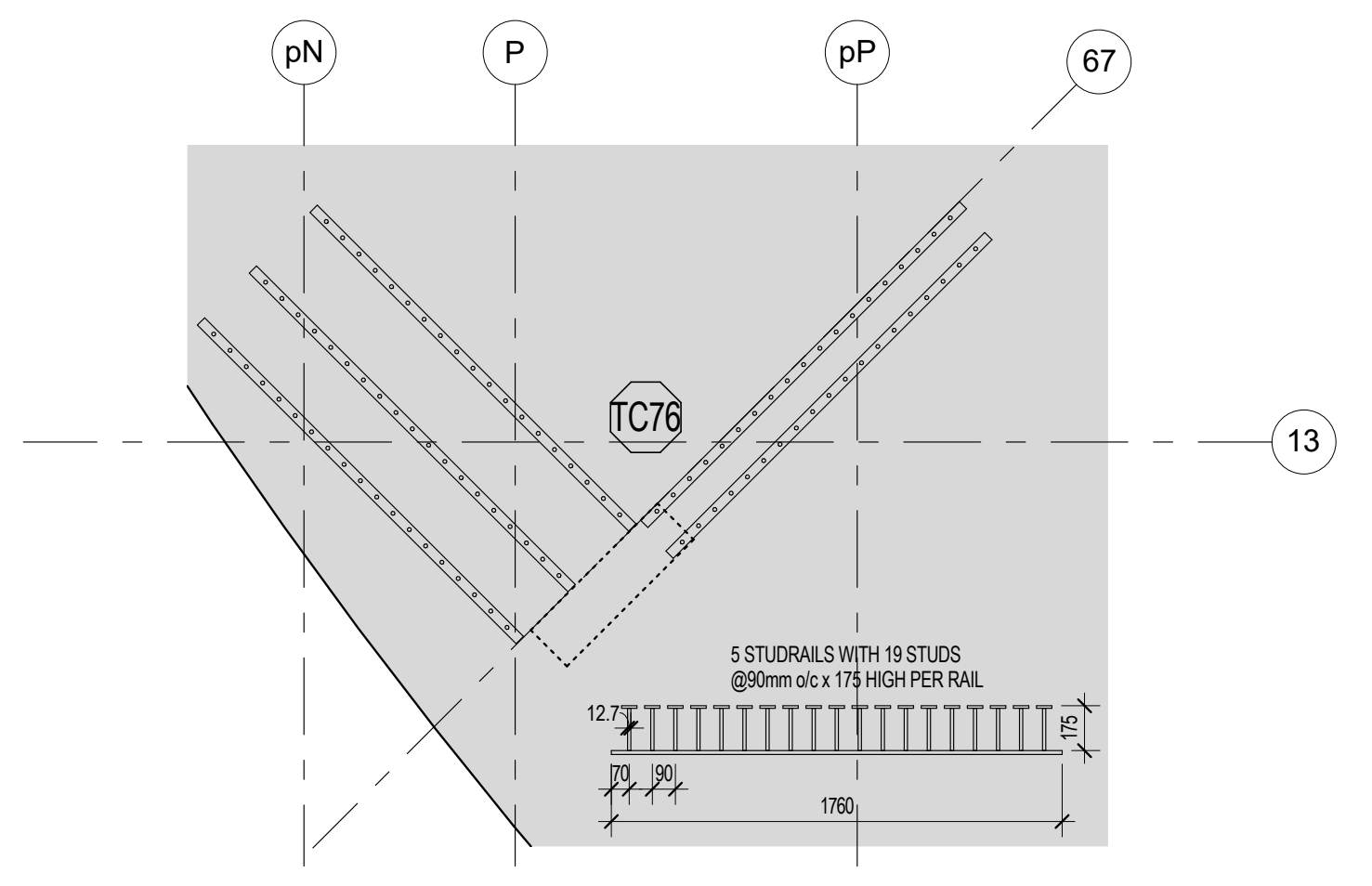
pN
P
pP
67
13
TC76
5 STUDRAILS WITH 19 STUDS @90mm o/c x 175 HIGH PER RAIL
12.7
175
70
90
1760

D1 / S1-18 DETAIL
1 : 25

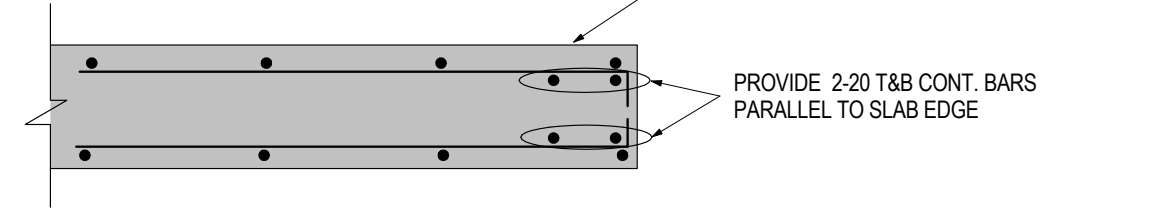
SEE PLAN AND NOTES FOR SLAB REINF. TYP. u/n
PROVIDE 2-20 T&B CONT. BARS PARALLEL TO SLAB EDGE

SLAB EDGE BARS DETAIL
1 : 10

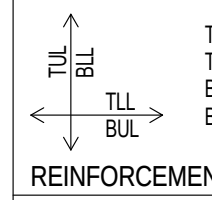
TUL
BLL
TLL
BUL

TUL = TOP UPPER LAYER
TLL = TOP LOWER LAYER
BUL = BOTTOM UPPER LAYER
BLL = BOTTOM LOWER LAYER

REINFORCEMENT PLACEMENT DIAGRAM

SLAB:	200 MIN. u/n
INTEGRITY BARS:	3-20M BEW
CONCRETE STRENGTH:	25 MPa
TEMP. STEEL:	15@500 T&B EW
TERRACE SLAB:	225 MIN. u/n
INTEGRITY BARS:	3-20M BEW
CONCRETE STRENGTH:	25 MPa C1
TEMP. STEEL:	15@400 T&B EW

SEE PLAN FOR ADDITIONAL REINFORCEMENT

NOTES:

1. TOP OF STRUCTURAL SLAB TO BE 0.0 mm BELOW FINISHED FLOOR DATUM ELEVATION EXCEPT AS CROSSED AND NOTED. SEE ARCHITECTURAL DRAWINGS FOR DATUM ELEVATION.
2. THE STRUCTURAL SLAB HAS BEEN DESIGNED FOR THE FOLLOWING LIVE LOADS (LL) AND SUPERIMPOSED DEAD LOADS (SDL) IN ADDITION TO THE SELF WEIGHT.

	LL	SDL
SUITES	1.9 kPa	1.25 kPa
TERRACE	4.8 kPa**	6.0 kPa*
STAIRS/LOBBY	4.8 kPa	0.5 kPa
BALCONIES	4.8 kPa**	0.5 kPa
GREEN ROOF***	4.8kPa**	11.2kPa*

* INCLUDES ALLOWANCE FOR SLOPES AND ROOFING MATERIALS
** AN ALLOWANCE FOR SNOW LOAD OF 1.28 kPa HAS BEEN CONSIDERED.
*** INCLUDES ALLOWANCE FOR 8.2 kPa GREEN ROOF DEAD LOAD.

3. CONCRETE COVER FOR TOP AND BOTTOM BARS IN SLABS TO BE 25 mm.
4. APPROVAL MUST BE OBTAINED FROM ENGINEER FOR ALL OPENINGS OTHER THAN THOSE SHOWN ON PLAN.
5. THE PROJECT SUPERINTENDENT MUST CONTACT THIS OFFICE 24 HOURS PRIOR TO PLACING STRUCTURAL CONCRETE FOR A REVIEW OF PREPARATIONS.
6. SEE ALSO TYPICAL NOTES AND DETAILS.
7. SEE BEAM AND COLUMN SCHEDULES, WALL ELEVATIONS.
8. PROVIDE CONTINUOUS TEMPERATURE STEEL TOP AND BOTTOM, HOOKED AT EDGE OF SLAB AND OPENINGS, IN ADDITION TO REINFORCEMENT SHOWN ON PLAN.
9. PROVIDE TLS FOR ALL SLAB REINFORCEMENT.
10. ADD 2-20T&B CONT. AT PERIMETER BEND BARS TO SUIT SLAB EDGE. SEE SLAB EDGE BARS DETAIL.
11. AREAS NOTED THUS ▨ ON PLAN, INDICATE THICKENED SLAB: SEE PLAN FOR THICKNESS.
12. PROVIDE C1 CONCRETE WHERE EXPOSURE EXISTS.

Contractor Must Check And Verify All Dimensions On The Job.

Do Not Scale The Drawings.

All Drawings, Specifications And Related Documents Are The Copyright Of The Architect And Must Be Returned Upon Request.

Reproduction Of Drawings, Specifications And Related Documents In Part Or Whole Is Forbidden Without The Architects Written Permission.

This Drawing Is Not To Be Used For Construction Until Signed ByThe Architect.

Date:

DEC.18,2015 DEC.18,2015

stephenson ENGINEERING
2550 Victoria Park Ave. Suite 602
Toronto ON M2J 5A9 | Tel: (416) 635 9970
www.stephenson-eng.com | info@stephenson-eng.com

No	Revision	Date
5	GREEN ROOF LOAD REVSION	NOV.16,2015

No	Issued For	Date
7	ISSUED FOR STEEL TENDER	DEC.18,2015
4	BUILDING PERMIT RESUBMISSION	SEPT.21,2015
3	BUILDING PERMIT RESUBMISSION	JULY 22,2015
2	BUILDING PERMIT SUBMISSION	JUNE 12,2015
1	ISSUED FOR WT REVIEW	MAY 01,2015

AQUAVISTA
AT BAYSIDE TORONTO

Drawing Title
LEVEL 11 FLOOR
FRAMING PLAN

Project
Hines TRIDEL®
AQUAVISTA
Block 3 - R3 & R4
Merchant's Whart
Toronto, ON

Scale
As indicated
Drawn by
DC
Checked by
IA/BBS
Project No.
20140031
Date
DEC.18,2015
Drawing No.
S1-18

Plot Date: 3/9/2016 10:00:49 AM

LEVEL 12 FRAMING PLAN - WITH BLL AND TUL

1 : 100

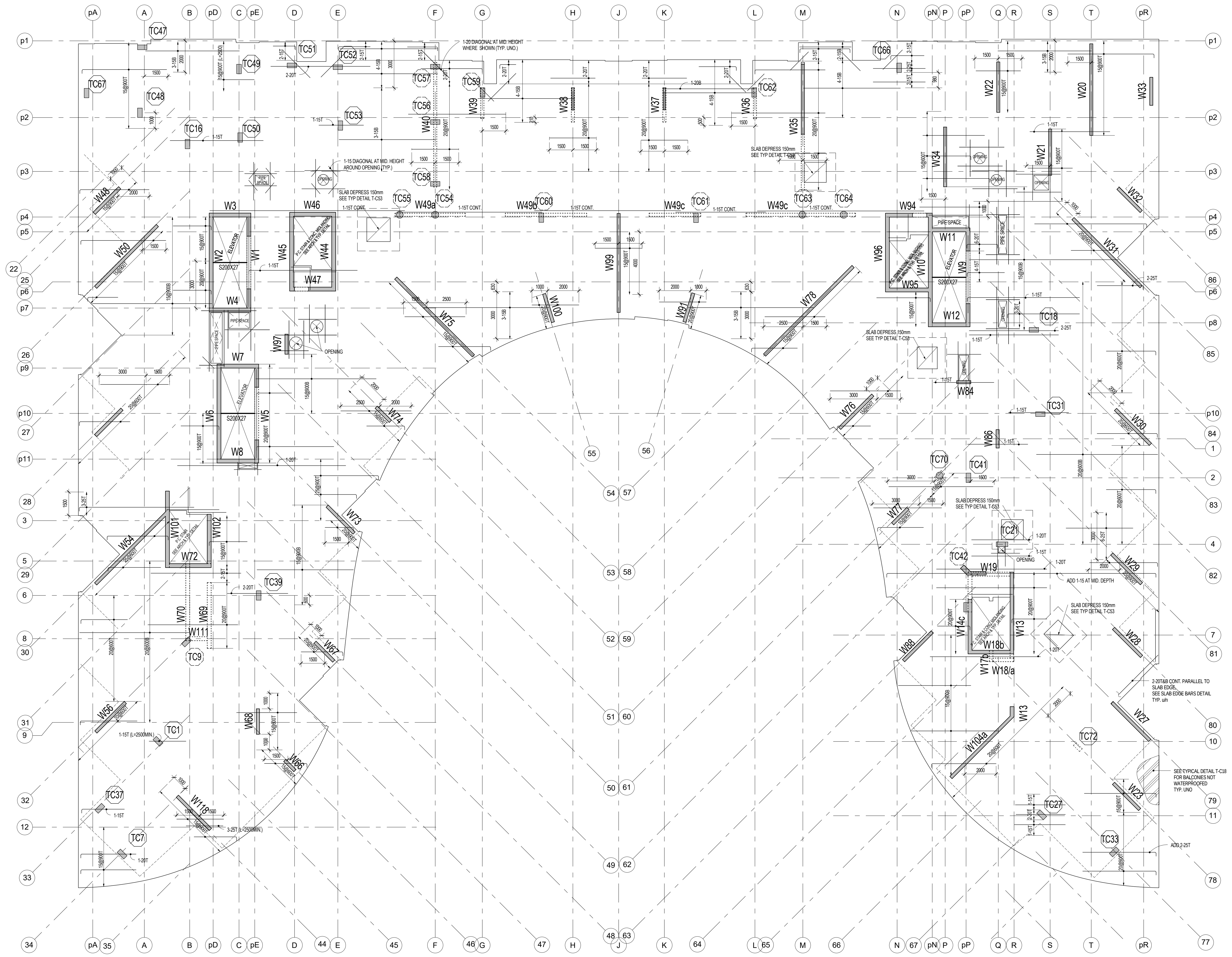
pA
A
B
pD
C
pE
D
E
F
G
H
J
K
L
M
N
pN
P
pP
Q
R
S
T
pR
p1
p2
p3
p4
p5
p6
p7
p9
p10
p11
W3
W46
W2
W1
W45
W44
W47
W4
W7
W6
W5
W8
W72
W101
W102
W111
TC47
TC67
TC48
TC16
TC50
TC49
TC51
TC52
TC53
TC57
TC59
TC56
TC58
TC55
TC54
TC60
TC61
TC62
TC63
TC64
TC66
W99
W100
W91
W78
W75
W74
W73
W67
W69
W70
W54
W50
W48
W56
W68
W66
W118
W94
W96
W95
W11
W10
W9
W12
W84
W86
W77
W19
W14c
W18b
W18/a
W13
W104a
W88
W76
TC1
TC7
TC9
TC37
TC39
TC18
TC31
TC41
TC42
TC21
TC70
TC72
TC27
TC33
W20
W21
W22
W33
W34
W35
W36
W37
W38
W39
W40
W30
W31
W32
W29
W28
W27
W23
W49a
W49b
W49c
SLAB DEPRESS 150mm SEE TYP DETAIL T-C53
OPENING
SEE TYPICAL DETAIL T-C18 FOR BALCONIES NOT WATERPROOFED. TYP. U/N.
2-20T&B CONT. PARALLEL TO SLAB EDGE, SEE SLAB EDGE BARS DETAIL TYP. u/n

LEVEL 12 FRAMING PLAN - WITH BUL AND TLL

1 : 100

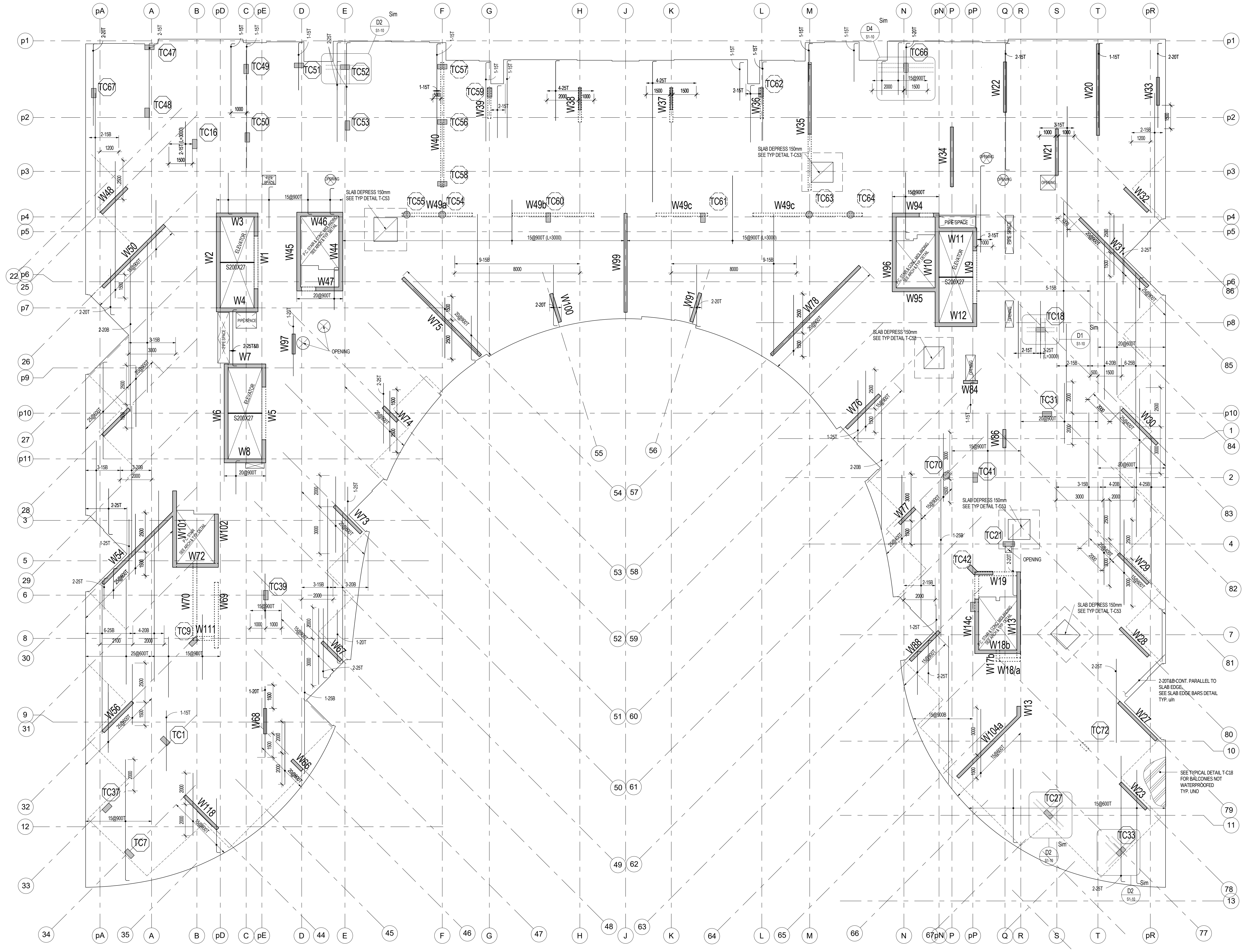
pA
A
B
pD
C
pE
D
E
F
G
H
J
K
L
M
N
pN
P
pP
Q
R
S
T
pR
p1
p2
p3
p4
p5
p6
p7
p9
p10
p11
W3
W46
W4
W7
W8
W72
W94
W95
W99
W100
W91
W78
W75
W74
W73
W84
W13
W104a
TC47
TC49
TC51
TC52
TC57
TC59
TC62
TC66
TC18
TC31
TC33
TC27
SLAB DEPRESS 150mm SEE TYP DETAIL T-C53
OPENING
SEE TYPICAL DETAIL T-C18 FOR BALCONIES NOT WATERPROOFED. TYP. U/N.

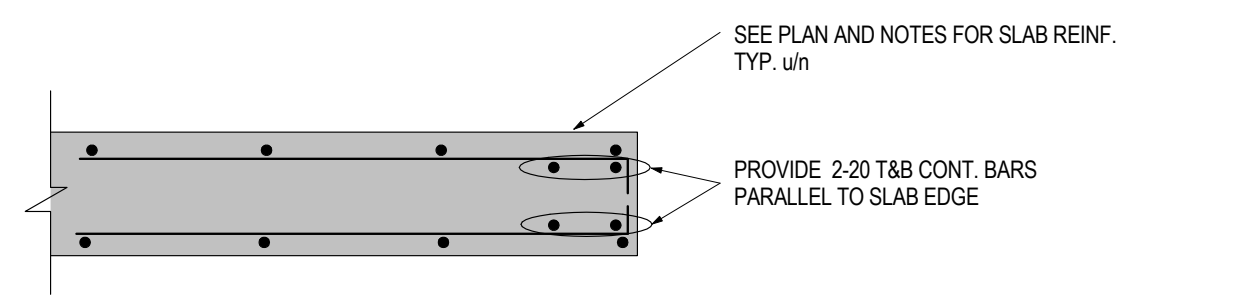
SEE PLAN AND NOTES FOR SLAB REINF. TYP. u/n
PROVIDE 2-20 T&B CONT. BARS PARALLEL TO SLAB EDGE

SLAB EDGE BARS DETAIL

1 : 10

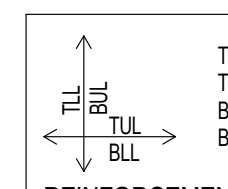
TLL
BUL
TUL
BLL

TUL = TOP UPPER LAYER
TLL = TOP LOWER LAYER
BUL = BOTTOM UPPER LAYER
BLL = BOTTOM LOWER LAYER

REINFORCEMENT PLACEMENT DIAGRAM

SLAB:	200 MIN. u/n
INTEGRITY BARS:	3-20M BEW
CONCRETE STRENGTH:	25 MPa
TEMP. STEEL:	15@500 TEW 15@500 BEW

SEE PLAN FOR ADDITIONAL REINFORCEMENT

NOTES:

1. TOP OF STRUCTURAL SLAB TO BE 0.0 mm BELOW FINISHED FLOOR DATUM ELEVATION EXCEPT AS CROSSED AND NOTED. SEE ARCHITECTURAL DRAWINGS FOR DATUM ELEVATION.
2. THE STRUCTURAL SLAB HAS BEEN DESIGNED FOR THE FOLLOWING LIVE LOADS (LL) AND SUPERIMPOSED DEAD LOADS (SDL) IN ADDITION TO THE SELF WEIGHT.

	LL	SDL
SUITES	1.9 kPa	1.25 kPa
TERRACE	4.8 kPa**	6.0 kPa*
STAIRS/LOBBY	4.8 kPa	0.5 kPa
BALCONIES	4.8 kPa**	0.5 kPa

* INCLUDES ALLOWANCE FOR SLOPES AND ROOFING MATERIALS
** AN ALLOWANCE FOR SNOW LOAD OF 1.28 kPa HAS BEEN CONSIDERED.

3. CONCRETE COVER FOR TOP AND BOTTOM BARS IN SLABS TO BE 25 mm.
4. APPROVAL MUST BE OBTAINED FROM ENGINEER FOR ALL OPENINGS OTHER THAN THOSE SHOWN ON PLAN.
5. THE PROJECT SUPERINTENDENT MUST CONTACT THIS OFFICE 24 HOURS PRIOR TO PLACING STRUCTURAL CONCRETE FOR A REVIEW OF PREPARATIONS.
6. SEE ALSO TYPICAL NOTES AND DETAILS.
7. SEE BEAM AND COLUMN SCHEDULES, WALL ELEVATIONS.
8. PROVIDE CONTINUOUS TEMPERATURE STEEL TOP AND BOTTOM, HOOKED AT EDGE OF SLAB AND OPENINGS, IN ADDITION TO REINFORCEMENT SHOWN ON PLAN.
9. PROVIDE TLS FOR ALL SLAB REINFORCEMENT.
10. ADD 2-20T&B CONT. AT PERIMETER BEND BARS TO SUIT SLAB EDGE. SEE SLAB EDGE BARS DETAIL.

Contractor Must Check And Verify All Dimensions On The Job.

Do Not Scale The Drawings.

All Drawings, Specifications And Related Documents Are The Copyright Of The Architect And Must Be Returned Upon Request.

Reproduction Of Drawings, Specifications And Related Documents In Part Or Whole Is Forbidden Without The Architects Written Permission.

This Drawing Is Not To Be Used For Construction Until Signed ByThe Architect.

Date:

DEC.18,2015 DEC.18,2015

stephenson ENGINEERING
2550 Victoria Park Ave. Suite 602
Toronto ON M2J 5A9 | Tel: (416) 635 9970
www.stephenson-eng.com | info@stephenson-eng.com

No	Revision	Date

No	Issued For	Date
7	ISSUED FOR STEEL TENDER	DEC.18,2015
4	BUILDING PERMIT RESUBMISSION	SEPT.21,2015
3	BUILDING PERMIT RESUBMISSION	JULY 22,2015
2	BUILDING PERMIT SUBMISSION	JUNE 12,2015
1	ISSUED FOR WT REVIEW	MAY 01,2015

AQUAVISTA
AT BAYSIDE TORONTO

Drawing Title
LEVEL 12 / PH1 FLOOR
FRAMING PLAN

Project
Hines TRIDEL®
AQUAVISTA
Block 3 - R3 & R4
Merchant's Whart
Toronto, ON

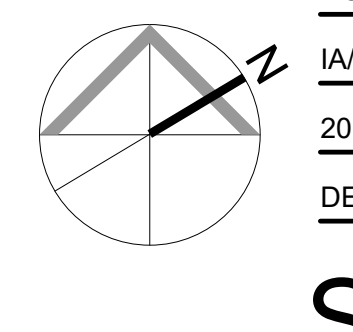

Scale
As indicated
Drawn by
DC
Checked by
IA/BBS
Project No.
20140031
Date
DEC.18,2015
Drawing No.
S1-19

Plot Date: 3/9/2016 10:00:53 AM

LEVEL 13 FRAMING PLAN - WITH BLL AND TUL
1 : 100

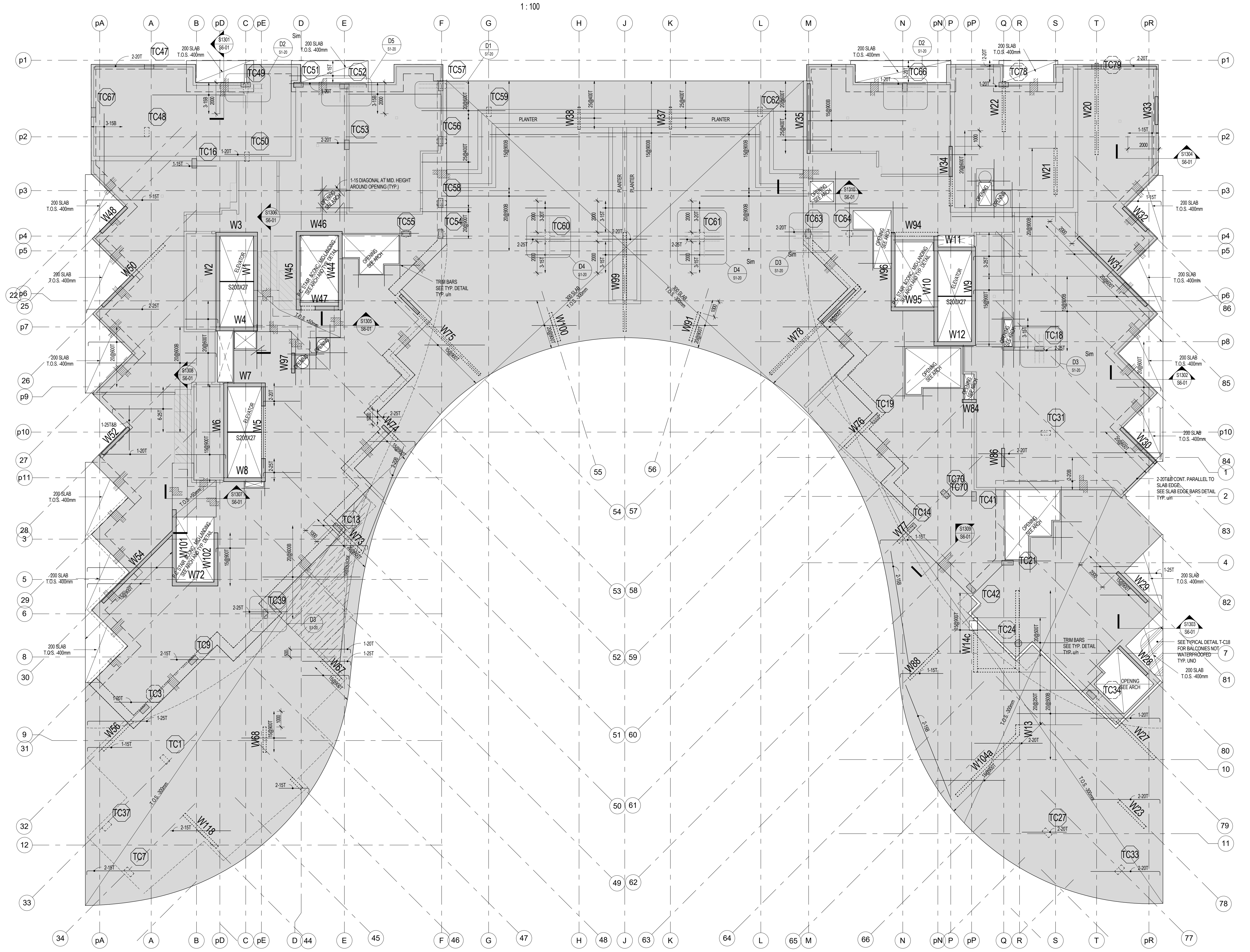
pA
A
B
pD
C
pE
D
E
F
G
H
J
K
L
M
N
pN
P
pP
Q
R
S
T
pR
p1
p2
p3
p4
p5
p6
p7
p8
p9
p10
p11
W3
W46
W94
W11
W12
W4
W7
W8
TC57
TC60
TC61
PLANTER
200 SLAB
T.O.S. -400mm

LEVEL 13 FRAMING PLAN - WITH BUL AND TLL
1 : 100

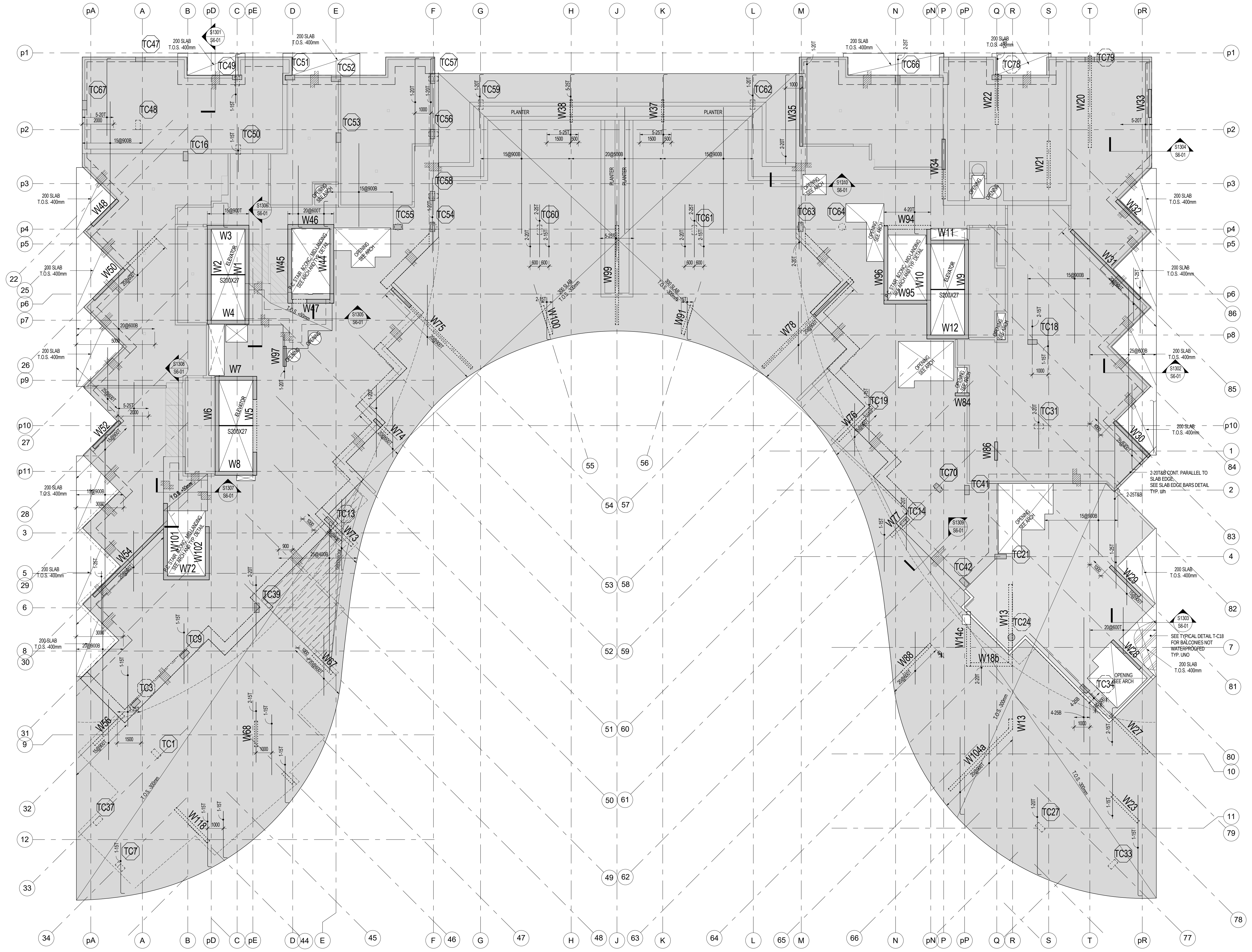
pA
A
B
pD
C
pE
D
E
F
G
H
J
K
L
M
N
pN
P
pP
Q
R
S
T
pR
p1
p2
p3
p4
p5
p6
p7
p8
p9
p10
p11
W3
W46
W94
W11
W12
W4
W7
W8
TC57
TC60
TC61
PLANTER
200 SLAB
T.O.S. -400mm

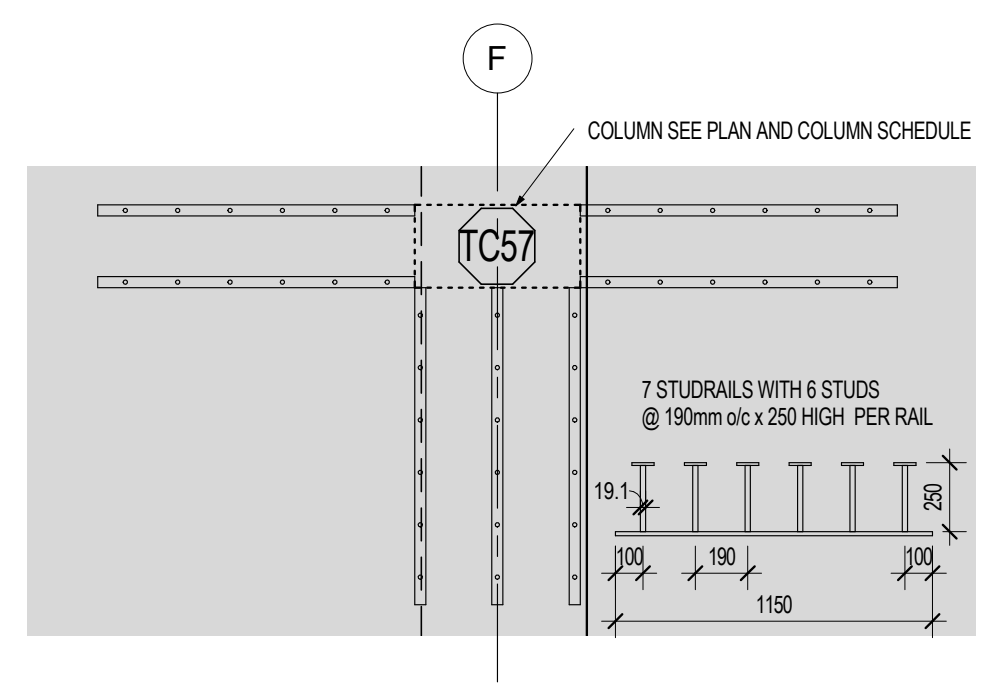
F
COLUMN SEE PLAN AND COLUMN SCHEDULE
TC57
7 STUDRAILS WITH 6 STUDS
@ 190mm o/c x 250 HIGH PER RAIL
19.1
250
100
190
100
1150

D1 PLAN DETAIL
S1-20
1 : 25

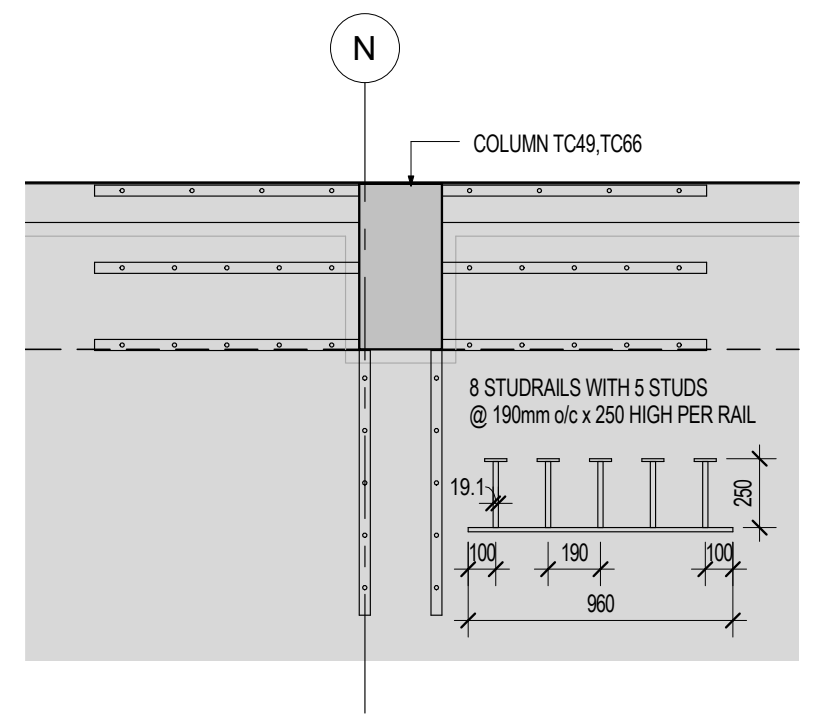
N
COLUMN TC49,TC66
8 STUDRAILS WITH 5 STUDS
@ 190mm o/c x 250 HIGH PER RAIL
19.1
250
100
190
100
960

D2 PLAN DETAIL
S1-20
1 : 25

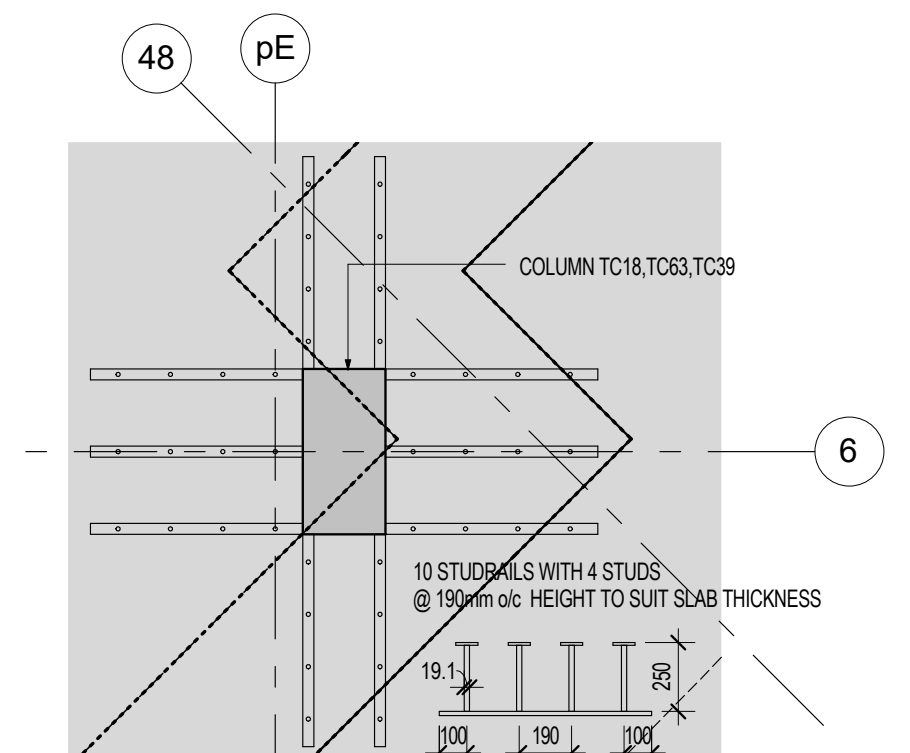
48
pE
COLUMN TC18,TC63,TC39
6
10 STUDRAILS WITH 4 STUDS
@ 190mm o/c HEIGHT TO SUIT SLAB THICKNESS
19.1
250
100
190
100
770

D3 PLAN DETAIL
S1-20
1 : 25

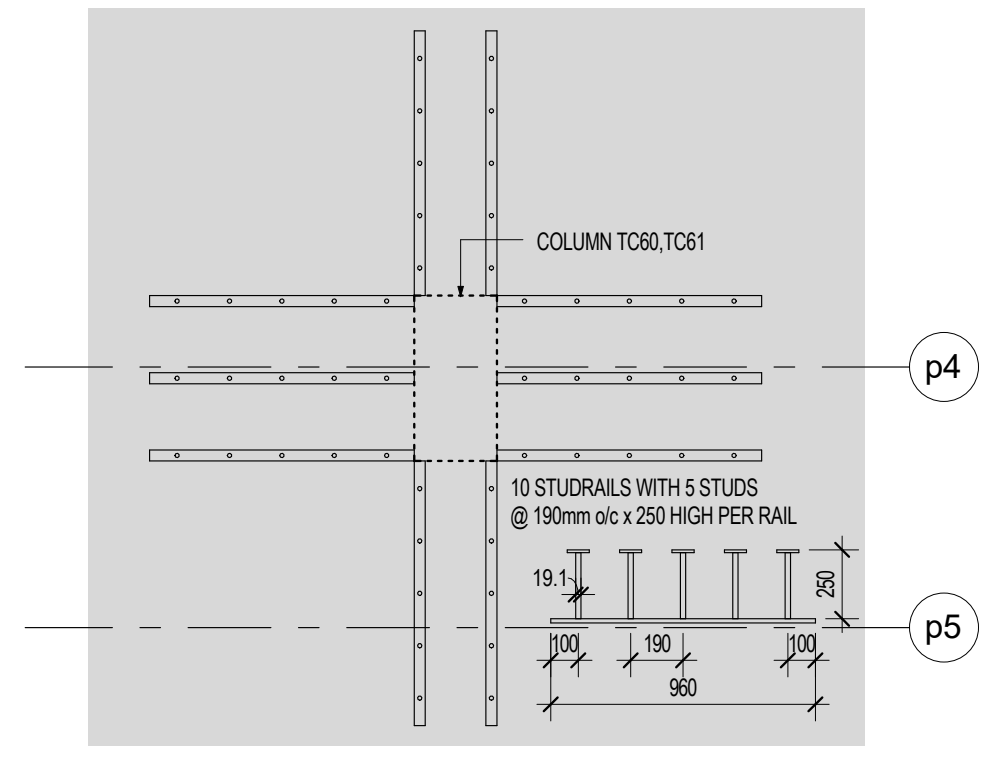
COLUMN TC60,TC61
p4
p5
10 STUDRAILS WITH 5 STUDS
@ 190mm o/c x 250 HIGH PER RAIL
19.1
250
100
190
100
960

D4 PLAN DETAIL
S1-20
1 : 25

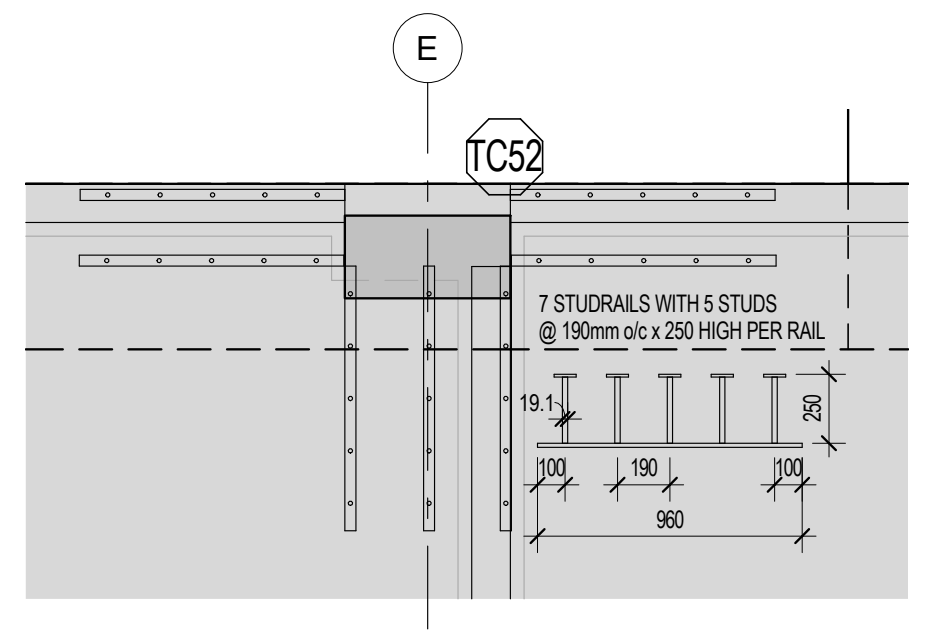
E
TC52
7 STUDRAILS WITH 5 STUDS
@ 190mm o/c x 250 HIGH PER RAIL
19.1
250
100
190
100
960

D5 PLAN DETAIL
S1-20
1 : 25

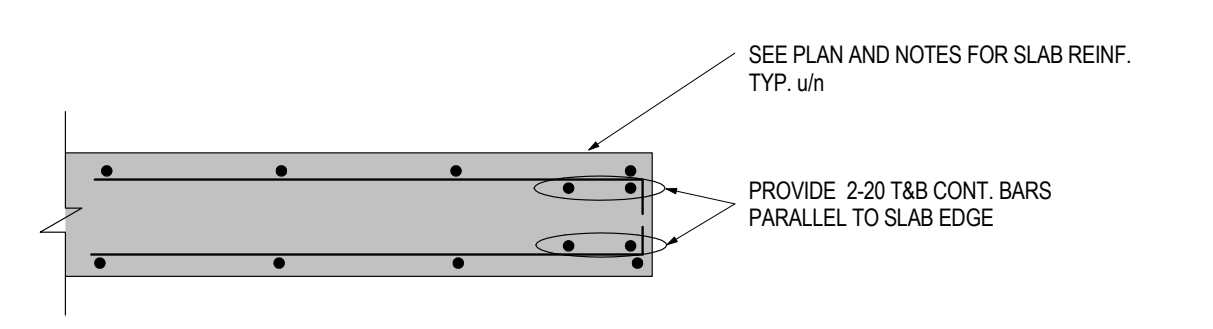
SEE PLAN AND NOTES FOR SLAB REINF.
TYP. u/n
PROVIDE 2-20 T&B CONT. BARS
PARALLEL TO SLAB EDGE

SLAB EDGE BARS DETAIL
1 : 10

10. SEE COLUMN AND BEAM SCHEDULES, WALL ELEVATIONS.
11. SEE ALSO TYPICAL NOTES AND DETAILS.
12. FOR CURB LOCATIONS DETAILS AND EXTENT, SEE ARCHITECTURAL AND MECHANICAL DRAWINGS. REINFORCE AS PER TYPICAL DETAIL.
13. SEE MECHANICAL AND ARCHITECTURAL DRAWINGS FOR LOCATION, EXTENT AND SIZE OF HOUSEKEEPING PADS. REINFORCE PADS WITH WWF 152x152 MW13.3xMW13.3 PLUS 10M @ 460 ON CENTRE DOWELS x 200 LONG.
14. SEE MECHANICAL AND ARCHITECTURAL DRAWINGS FOR LOCATION, EXTENT AND SIZE OF FLOATING FLOOR, REINFORCE SLABS WITH 10M@200 EW C/L EPOXY COATED.
15. PROVIDE TLS FOR ALL SLAB REINFORCEMENT.
16. PROVIDE CONTINUOUS TEMPERATURE STEEL TOP AND BOTTOM, HOOKED AT EDGE OF SLAB AND OPENINGS, IN ADDITION TO REINFORCEMENT SHOWN ON PLAN.
17. ADD 2-20T&B CONT. AT PERIMETER BEND BARS TO SUIT SLAB EDGE. SEE SLAB EDGE BARS DETAIL.

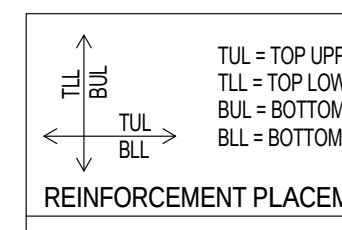
TLL
BUL
TUL
BLL

TUL = TOP UPPER LAYER
TLL = TOP LOWER LAYER
BUL = BOTTOM UPPER LAYER
BLL = BOTTOM LOWER LAYER

REINFORCEMENT PLACEMENT DIAGRAM

SLAB: 300 MIN. TYP. u/n
INTEGRITY BARS: 3-25M BEW
CONCRETE STRENGTH: 25 MPa
BOTTOM STEEL: 15@300BEW u/n
TOP STEEL: 15@300TEW u/n

SLAB: 200 MIN.
INTEGRITY BARS: 3-25M BEW
CONCRETE STRENGTH: 25 MPa
BOTTOM STEEL: 15@300BEW u/n
TOP STEEL: 15@300TEW u/n

SEE PLAN FOR ADDITIONAL REINFORCEMENT

NOTES

1. TOP OF STRUCTURAL SLAB TO BE 0.0 mm BELOW FINISHED FLOOR DATUM ELEVATION WITHIN THE MECHANICAL ROOM AND AT SLAB LOW POINTS. TOP OF SLAB IS SLOPED TO DRAINS AS SHOWN ON THE ARCHITECTURAL DRAWINGS. SEE ARCHITECTURAL DRAWINGS FOR DATUM ELEVATION.
2. TOP OF STRUCTURAL SLAB TO BE 0.0 mm BELOW FINISHED FLOOR DATUM ELEVATION WITHIN THE MECHANICAL ROOM AND AT SLAB HIGH POINTS. TOP OF SLAB IS SLOPED TO DRAINS AS SHOWN ON THE ARCHITECTURAL DRAWINGS. SEE ARCHITECTURAL DRAWINGS FOR DATUM ELEVATION.
3. ROOF DRAINAGE SLOPES ARE TO BE ACHIEVED BY SLOPING THE TOP OF THE SLAB. NOTE THAT THE SOFFIT OF SLAB IS FLAT.
4. THE STRUCTURAL SLAB HAS BEEN DESIGNED FOR THE FOLLOWING LIVE LOADS (LL) SUPERIMPOSED DEAD LOADS (SDL) AND SNOW LOADS (S) IN ADDITION TO THE SELF WEIGHT.

	LL	SDL
GENERATOR/COOLING TOWER/MECHANICAL PENTHOUSE	6.0 kPa	3.6 kPa
STAIRS/HALL/LOBBY	4.8 kPa	0.5 kPa
PENTHOUSE SUITES	1.9 kPa	1.25 kPa
AMENITY AREA	4.8kPa**	1.25 kPa
GREEN ROOF***	4.8kPa**	11.2 kPa*
PLANTERS	1.12kPa	24 kPa*
MECHANICAL&ELECTRICAL ROOM	3.6 kPa	3.6 kPa
TERRACE	4.8 kPa**	6.0 kPa*

* INCLUDES ALLOWANCE FOR SLOPES AND ROOFING MATERIALS
** AN ALLOWANCE FOR SNOW LOAD OF 1.12 kPa HAS BEEN CONSIDERED.
SEE PLAN FOR ADDITIONAL SNOWLOAD
*** INCLUDES ALLOWANCE FOR 8.2 kPa GREEN ROOF DEAD LOAD.

5. CONCRETE SHALL HAVE A MINIMUM COMPRESSIVE STRENGTH AT 28 DAYS OF 25MPa. REFER ALSO TO WALL SCHEDULE.
6. CONCRETE COVER FOR TOP AND BOTTOM BARS IN SLABS TO BE 25 mm.
7. APPROVAL MUST BE OBTAINED FROM ENGINEER FOR ALL OPENINGS OTHER THAN THOSE SHOWN ON PLAN.
8. THE PROJECT SUPERINTENDENT MUST CONTACT THIS OFFICE 24 HOURS PRIOR TO PLACING STRUCTURAL CONCRETE FOR A REVIEW OF PREPARATIONS.
9. SEE TYPICAL DETAIL DRAWING FOR LINTELS IN NON-LOAD BEARING BLOCK WALLS.

Contractor Must Check And Verify All Dimensions On The Job.

Do Not Scale The Drawings.

All Drawings, Specifications And Related Documents Are The Copyright Of The Architect And Must Be Returned Upon Request.

Reproduction Of Drawings, Specifications And Related Documents In Part Or Whole Is Forbidden Without The Architects Written Permission.

This Drawing Is Not To Be Used For Construction Until Signed ByThe Architect.

Date:

DEC.18,2015 DEC.18,2015

stephenson
ENGINEERING
2550 Victoria Park Ave. Suite 602
Toronto ON M2J 5A9 | Tel: (416) 635 9970
www.stephenson-eng.com | info@stephenson-eng.com

No	Revision	Date
5	GREEN ROOF LOAD REVSION	NOV.16,2015

No	Issued For	Date
7	ISSUED FOR STEEL TENDER	DEC.18,2015
4	BUILDING PERMIT RESUBMISSION	SEPT.21,2015
3	BUILDING PERMIT RESUBMISSION	JULY 22,2015
2	BUILDING PERMIT SUBMISSION	JUNE 12,2015
1	ISSUED FOR WT REVIEW	MAY 01,2015

AQUAVISTA
AT BAYSIDE TORONTO

Drawing Title
LEVEL 13/PH2/ MECH.
FLOOR FRAMING PLAN

Project
Hines TRIDEL®
AQUAVISTA
Block 3 - R3 & R4
Merchant's Whart
Toronto, ON

Scale: As indicated
Drawn by: DC
Checked by: IA/BBS
Project No.: 20140031
Date: DEC.18,2015
Drawing No.: S1-20

Plot Date: 3/9/2016 10:01:07 AM

LEVEL 14 FRAMING PLAN
1 : 100

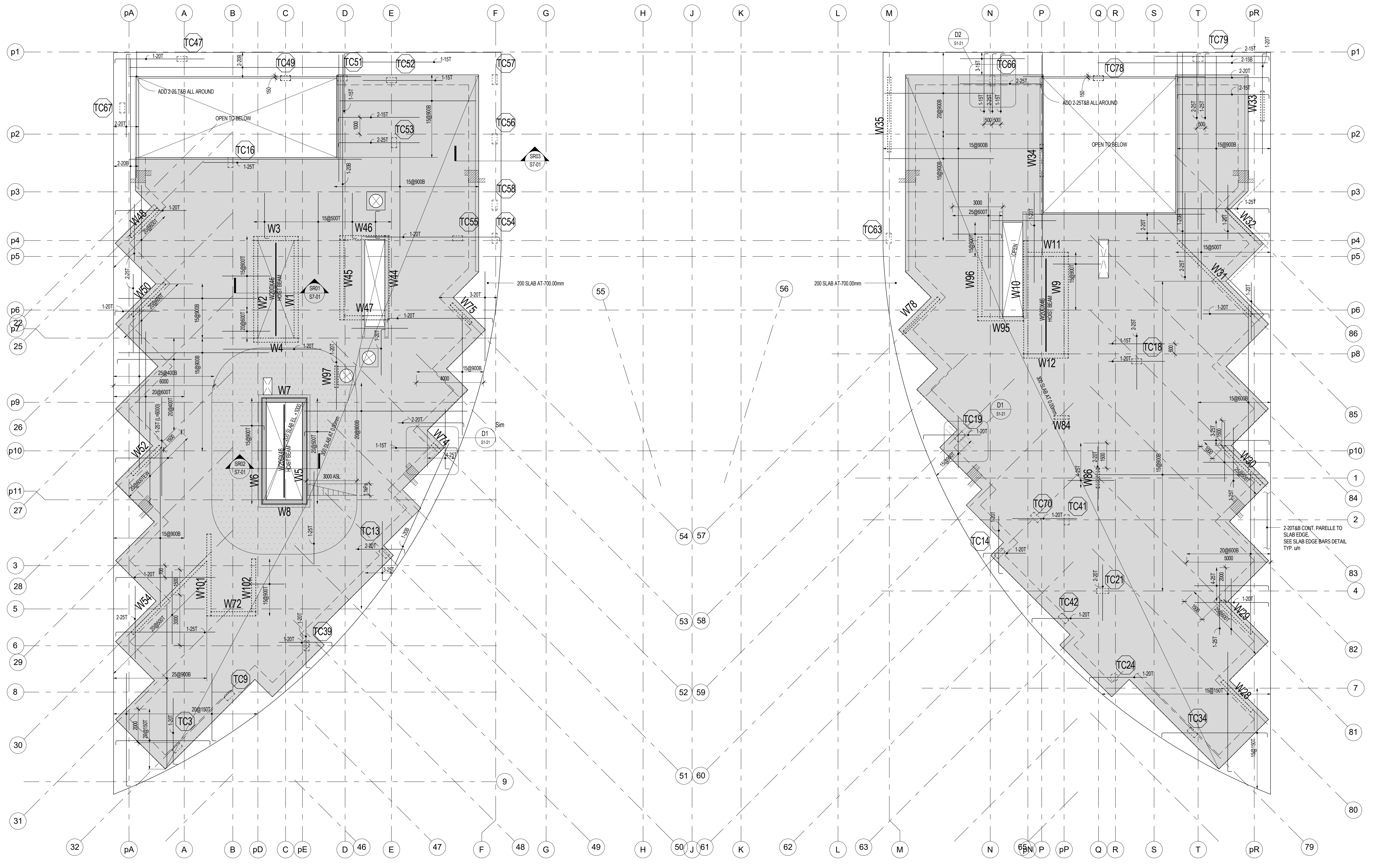
pA
A
B
C
D
E
F
G
H
J
K
L
M
N
P
Q
R
S
T
pR
p1
p2
p3
p4
p5
p6
p7
p8
p9
p10
p11
TC47
TC49
TC51
TC52
TC57
TC67
TC56
TC53
TC16
TC58
TC55
TC54
TC13
TC39
TC9
TC3
TC66
TC78
TC79
TC63
TC18
TC19
TC70
TC41
TC14
TC21
TC42
TC24
TC34
W48
W3
W46
W45
W44
W47
W2
W1
W50
W4
W75
W97
W7
W6
W5
W8
W52
W74
W101
W102
W72
W54
W35
W34
W33
W32
W31
W11
W96
W10
W9
W95
W12
W78
W84
W86
W30
W29
W28
ADD 2-25 T&B ALL AROUND
OPEN TO BELOW
ADD 2-25T&B ALL AROUND
W200X46 HOIST BEAM
SR01 S7-01
SR02 S7-01
SR03 S7-01
200 SLAB AT-700.00mm
300 SLAB AT 0.00mm
OPEN
D1 S1-21
D2 S1-21
2-20T&B CONT. PARELLE TO SLAB EDGE, SEE SLAB EDGE BARS DETAIL TYP. u/n
15@900B
15@500T
15@900T
20@600T
25@400B
25@600T
20@900B
20@600B
1-20T
1-15T
2-15T
2-25T
1-25T
2-20B
2-20T
1-20B
1000
3000
4000
5000
6000
150
500
1 2 3 4 5 6 7 8 9 25 26 27 29 30 31 32 46 47 48 49 50 51 52 53 54 55 56 57 58 59 60 61 62 63 79 80 81 82 83 84 85 86 pD pE pN pP
Sim

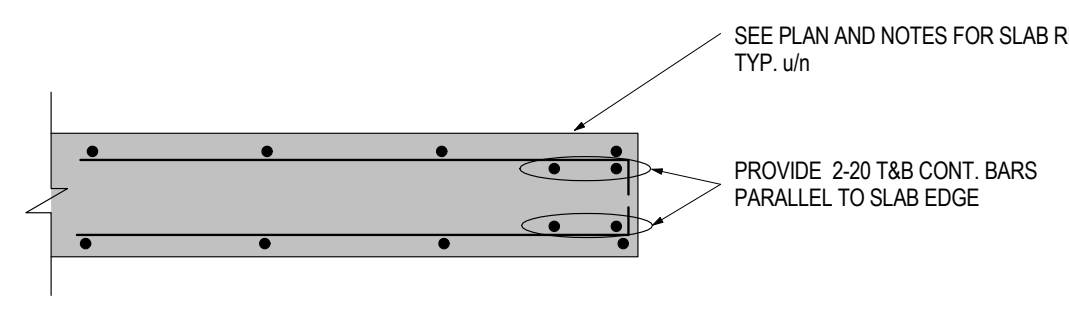
SEE PLAN AND NOTES FOR SLAB REINF.
TYP. u/n
PROVIDE 2-20 T&B CONT. BARS
PARALLEL TO SLAB EDGE

SLAB EDGE BARS DETAIL
1 : 10

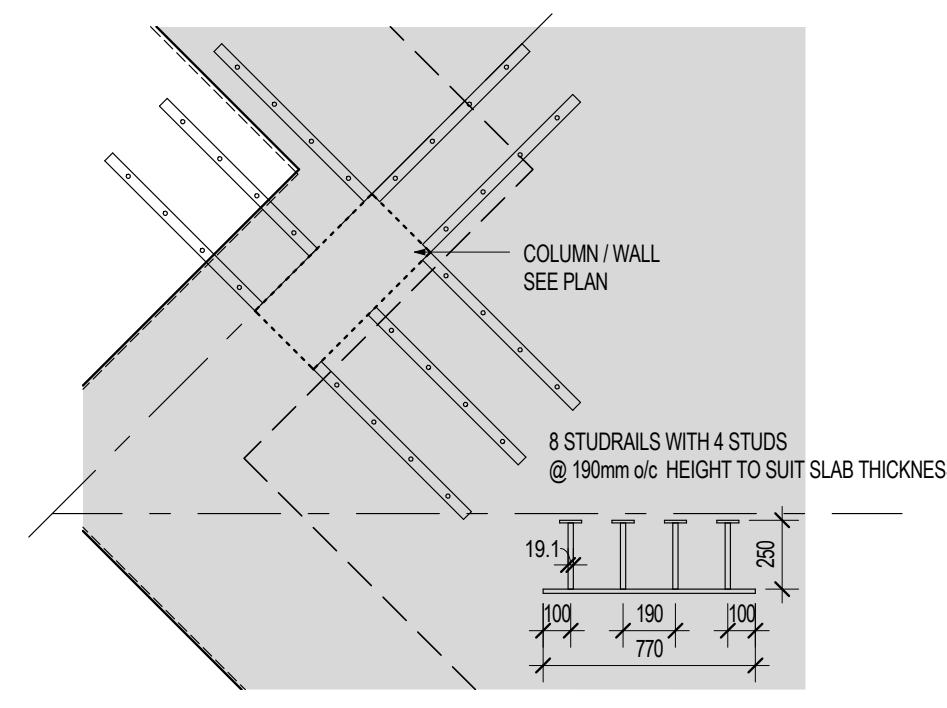
COLUMN / WALL
SEE PLAN
8 STUDRAILS WITH 4 STUDS
@ 190mm o/c HEIGHT TO SUIT SLAB THICKNESS
19.1
250
100
190
100
770

D1
S1-21

PLAN DETAIL
1 : 25

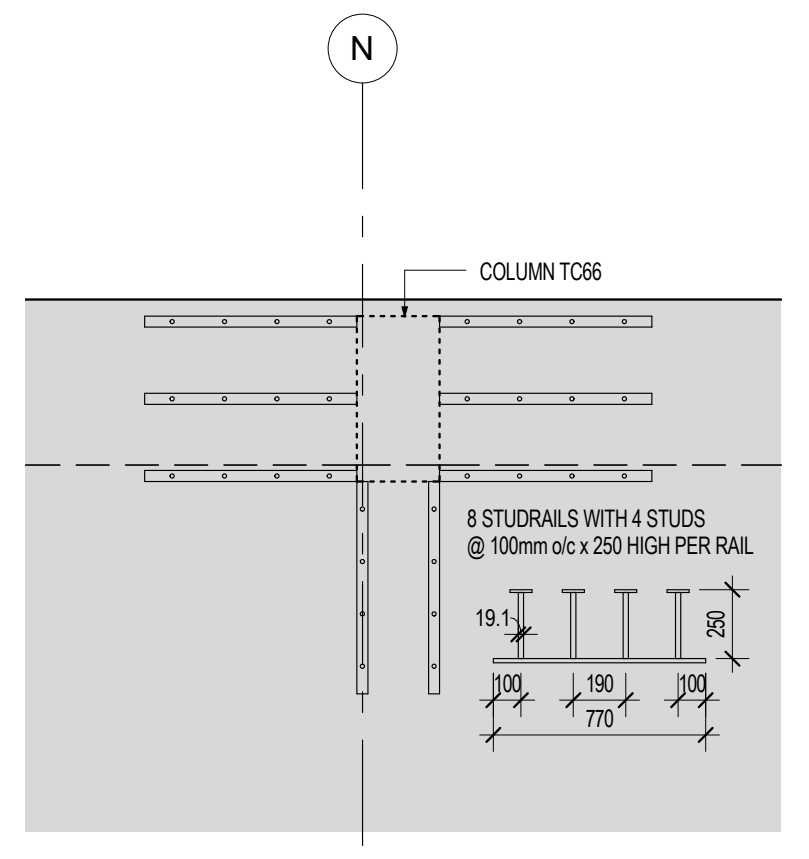
N
COLUMN TC66
8 STUDRAILS WITH 4 STUDS
@ 100mm o/c x 250 HIGH PER RAIL
19.1
250
100
190
100
770

D2
S1-21

PLAN DETAIL
1 : 25

1. TOP OF STRUCTURAL SLAB TO BE 0.0 mm ABOVE ROOF DATUM ELEVATION EXCEPT AS CROSSED AND NOTED AND AS SLOPED TO DRAINS AS SHOWN BY THE ARCHITECTURAL DRAWINGS. SEE ARCHITECTURAL DRAWINGS FOR DATUM ELEVATION.
2. ROOF DRAINAGE SLOPES ARE TO BE ACHIEVED BY SLOPING THE TOP OF THE SLAB. NOTE THAT THE SOFFIT OF SLAB IS FLAT.
3. THE STRUCTURAL SLAB HAS BEEN DESIGNED FOR THE FOLLOWING LIVE LOADS (LL) AND SUPERIMPOSED DEAD LOADS (SDL) AND SNOW LOADS (S) IN ADDITION TO THE SELF WEIGHT.

	LL	SDL
ROOF AREA	1.12 kPa+ASL	2.9 kPa *
GREEN ROOF***	1.12 kPa+ASL	11.2kPa*
PV PANEL ROOF	1.12 kPa+ASL	4.0 kPa*

* INCLUDES ALLOWANCE FOR SLOPES AND ROOFING MATERIALS

*** INCLUDES ALLOWANCE FOR 8.2 kPa GREEN ROOF DEAD LOAD.

4. CONCRETE SHALL HAVE A MINIMUM COMPRESSIVE STRENGTH OF 25 MPa AT 28 DAYS. REFER ALSO TO COLUMN AND WALL ELEVATION DRAWINGS.
5. CONCRETE COVER FOR TOP AND BOTTOM BARS IN SLABS TO BE 25 mm. REINFORCING TO BE CHAIRED TO MAINTAIN PROPER COVER.
6. APPROVAL MUST BE OBTAINED FROM ENGINEER FOR ALL OPENINGS OTHER THAN THOSE SHOWN ON PLAN.
7. THE PROJECT SUPERINTENDENT MUST CONTACT THIS OFFICE 24 HOURS PRIOR TO PLACING STRUCTURAL CONCRETE FOR A REVIEW OF PREPARATIONS.
8. SEE ALSO TYPICAL NOTES AND DETAIL DRAWINGS.
9. REFER TO BEAM AND COLUMN SCHEDULES, WALL ELEVATIONS.
10. PROVIDE CONTINUOUS TEMPERATURE STEEL TOP AND BOTTOM, HOOKED AT EDGE OF SLAB AND OPENINGS, IN ADDITION TO REINFORCEMENT SHOWN ON PLAN.
11. PROVIDE TLS FOR ALL SLAB REINFORCEMNT.
12. ADD 2-20T&B CONT. AT PERIMETER BEND BARS TO SUIT SLAB EDGE. SEE SLAB EDGE BARS DETAIL.

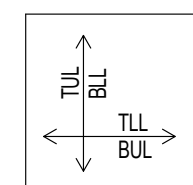
TUL
BLL
TLL
BUL

TUL = TOP UPPER LAYER
TLL = TOP LOWER LAYER
BUL = BOTTOM UPPER LAYER
BLL = BOTTOM LOWER LAYER

REINFORCEMENT PLACEMENT DIAGRAM

SLAB:	300 MIN.
INTEGRITY BARS:	3-20M BEW
CONCRETE STRENGTH:	25 MPa
BOTTOM STEEL:	15@300BEW u/n
TOP STEEL:	15@400TEW u/n

SLAB:	200 MIN. BALCONY
INTEGRITY BARS:	3-20M BEW
CONCRETE STRENGTH:	25 MPa
BOTTOM STEEL:	15@400BEW u/n
TOP STEEL:	15@400TEW u/n

SEE PLAN FOR ADDITIONAL REINFORCEMENT

Contractor Must Check And Verify All Dimensions On The Job.

Do Not Scale The Drawings.

All Drawings, Specifications And Related Documents Are The Copyright Of The Architect And Must Be Returned Upon Request.

Reproduction Of Drawings, Specifications And Related Documents In Part Or Whole Is Forbidden Without The Architects Written Permission.

This Drawing Is Not To Be Used For Construction Until Signed ByThe Architect.

Date:

DEC.18,2015 DEC.18,2015

stephenson ENGINEERING
2550 Victoria Park Ave. Suite 602
Toronto ON M2J 5A9 | Tel: (416) 635 9970
www.stephenson-eng.com | info@stephenson-eng.com

No	Revision	Date
5	GREEN ROOF LOAD REVSION	NOV.16,2015

No	Issued For	Date
7	ISSUED FOR STEEL TENDER	DEC.18,2015
4	BUILDING PERMIT RESUBMISSION	SEPT.21,2015
3	BUILDING PERMIT RESUBMISSION	JULY 22,2015
2	BUILDING PERMIT SUBMISSION	JUNE 12,2015
1	ISSUED FOR WT REVIEW	MAY 01,2015

AQUAVISTA
AT BAYSIDE TORONTO

Drawing Title
ROOF FRAMING PLANS

Project
Hines TRIDEL®
AQUAVISTA
Block 3 - R3 & R4
Merchant's Whart
Toronto, ON

Scale
As indicated
Drawn by
DC
Checked by
IA/BBS
Project No.
20140031
Date
DEC.18,2015
Drawing No.
S1-21

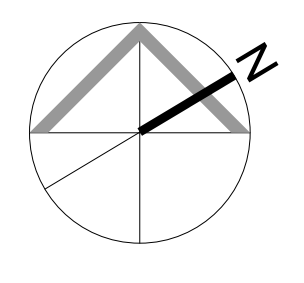

Plot Date: 3/9/2016 10:01:11 AM

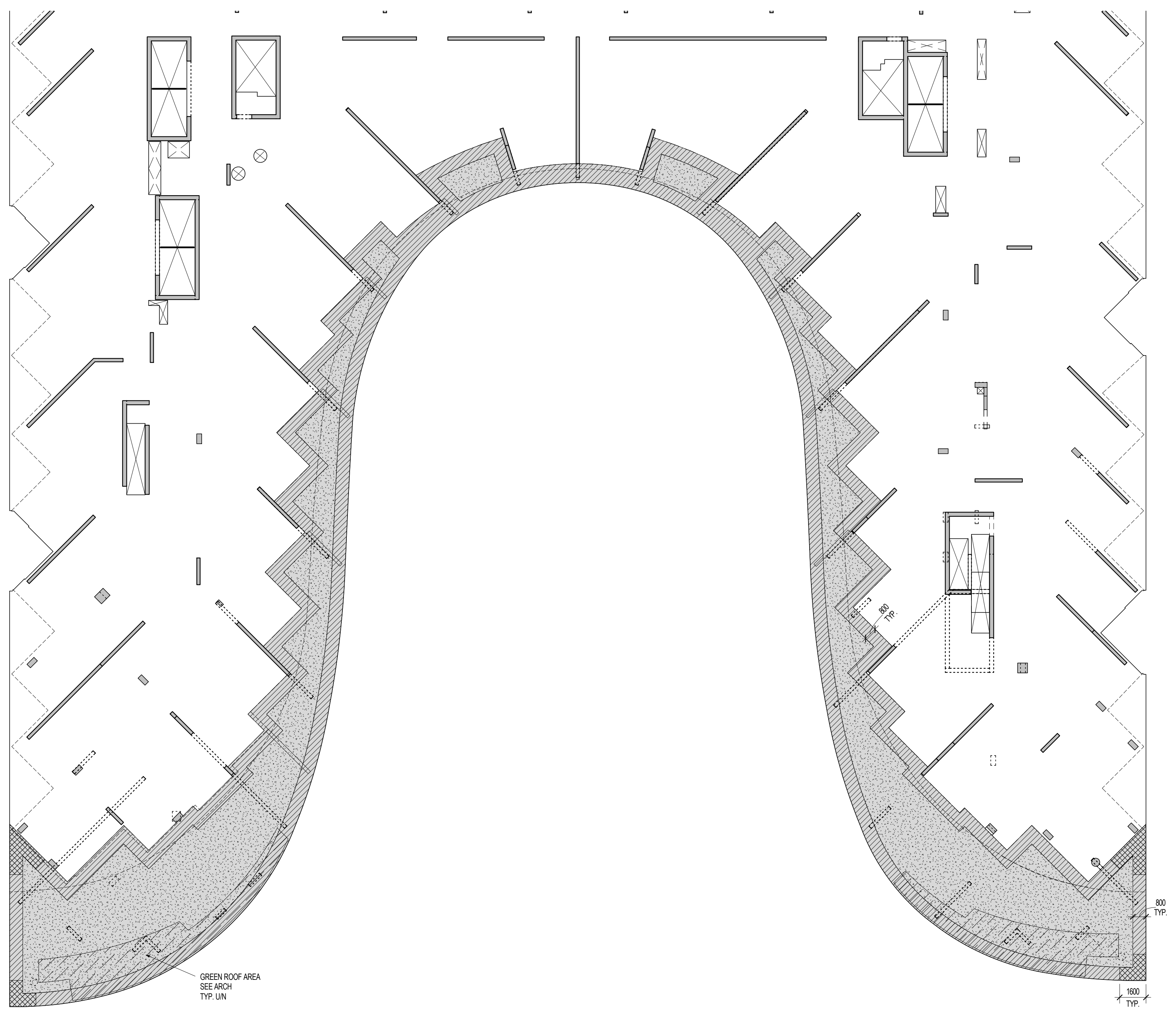
GREEN ROOF AREA
SEE ARCH
TYP. U/N
800
TYP.
1600
TYP.

LEVEL 7 WIND UPLIFT PLAN
1 : 150

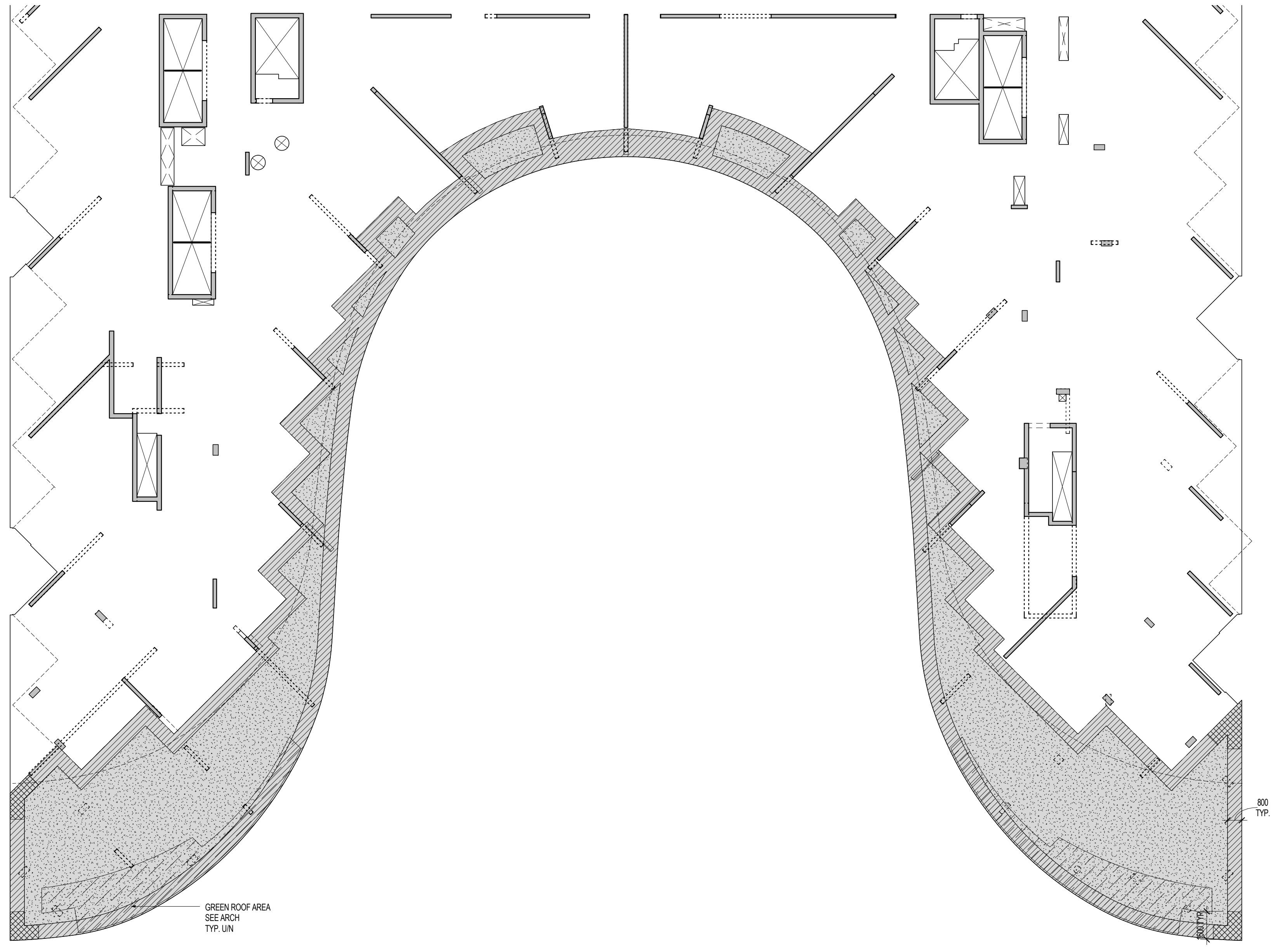
GREEN ROOF AREA
SEE ARCH
TYP. U/N
800
TYP.

LEVEL 11 WIND UPLIFT PLAN
1 : 150

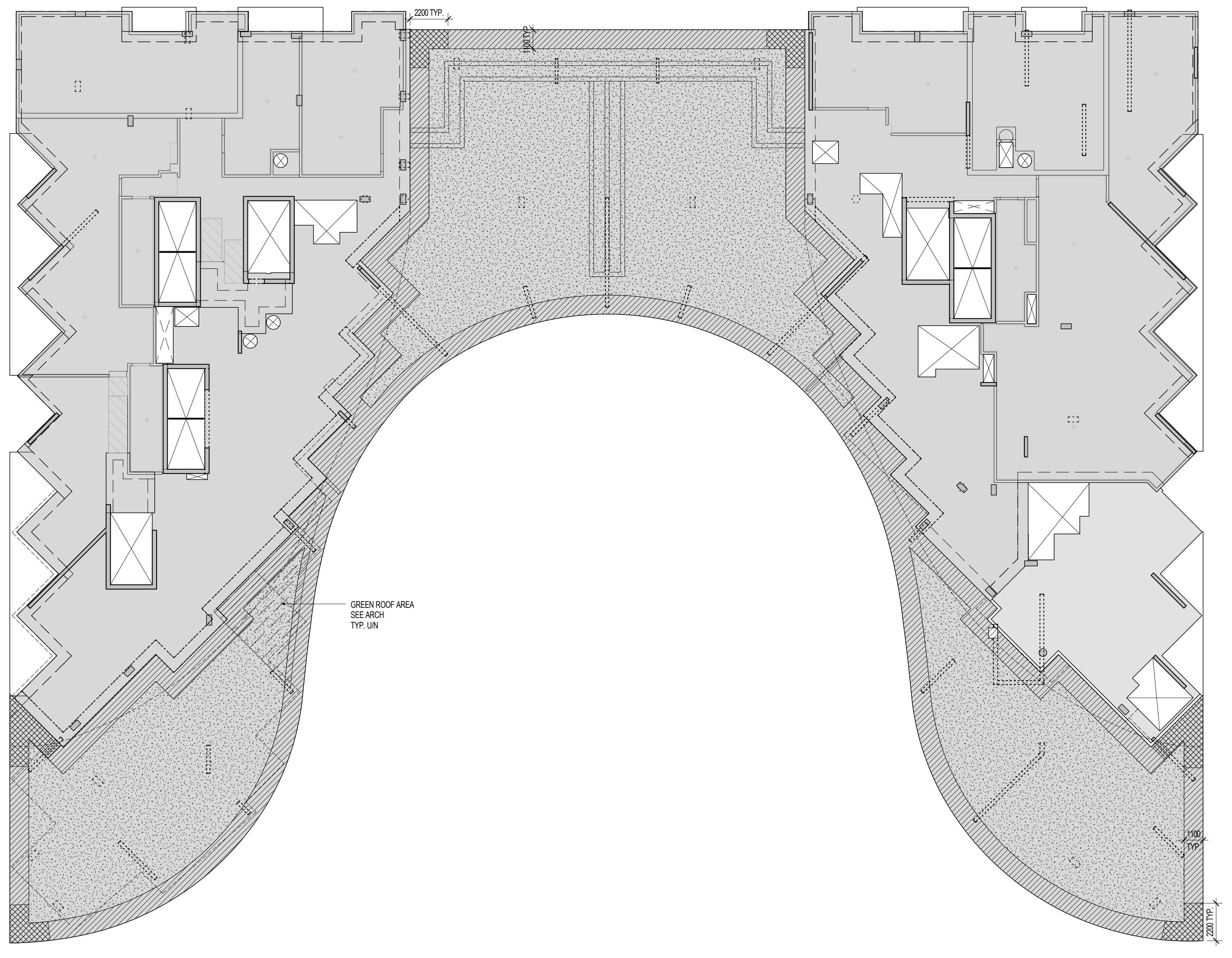
2200 TYP.
1100 TYP.
GREEN ROOF AREA
SEE ARCH
TYP. U/N
1100
TYP.
2200 TYP.

LEVEL 13 WIND UPLIFT PLAN
1 : 150

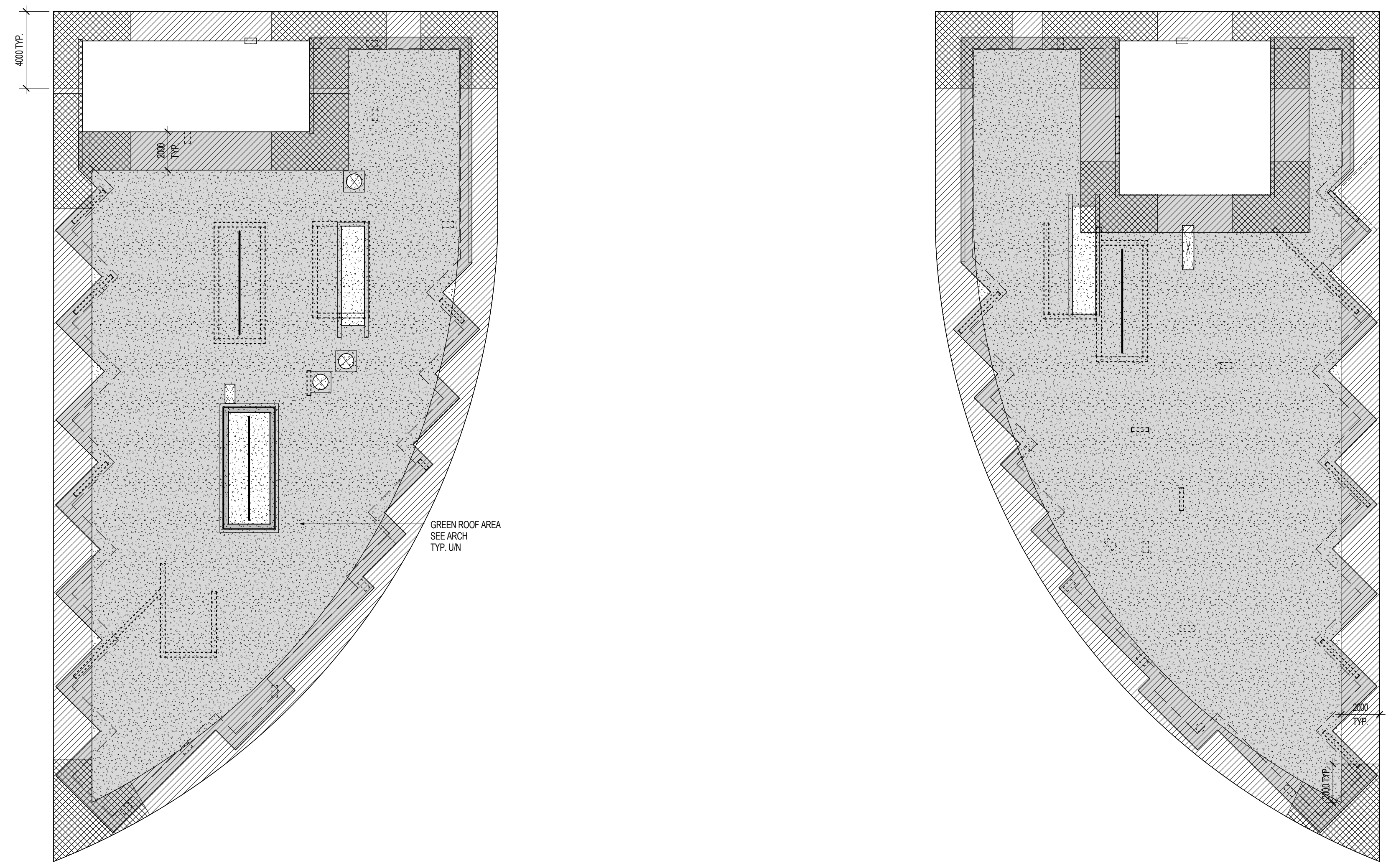
4000 TYP.
2000
TYP.
GREEN ROOF AREA
SEE ARCH
TYP. U/N
2000
TYP.
2000 TYP.

ROOF WIND UPLIFT PLAN
1 : 150

LEGEND:

1. LOADS NOTED ARE UNFACTORED WIND UPLIFT VALUES.

░	1.04 kPa
▨	2.24 kPa
▩	3.44 kPa

NOTE. REFER TO ARCH FOR GREEN ROOF EXTENT(TYP.)

Contractor Must Check And Verify All Dimensions On The Job.

Do Not Scale The Drawings.

All Drawings, Specifications And Related Documents Are The Copyright Of The Architect And Must Be Returned Upon Request.

Reproduction Of Drawings, Specifications And Related Documents In Part Or Whole Is Forbidden Without The Architects Written Permission.

This Drawing Is Not To Be Used For Construction Until Signed ByThe Architect.

Date:

stephenson
ENGINEERING
2550 Victoria Park Ave. Suite 602
Toronto ON M2J 5A9 | Tel: (416) 635 9970
www.stephenson-eng.com | info@stephenson-eng.com

No	Revision	Date

No	Issued For	Date

AQUAVISTA
AT BAYSIDE TORONTO

Drawing Title
WIND UPLIFT PLAN

Project
Hines TRIDEL®
AQUAVISTA
Block 3 - R3 & R4
Merchant's Whart
Toronto, ON

Scale
As indicated
Drawn by
Author
Checked by
Checker
Project No.
20140031
Date

Drawing No.
S1-22

CONCRETE COLUMN SCHEDULE (LEVEL 2 AND BELOW)

COLUMN NUMBER LEVEL 2				GC1	GC2	GC3	GC4	GC5	GC6	GC7	GC8	GC10	GC11	GC12	GC13
84000 SIZE VERT. REINF. TIES STRENGTH LEVEL 1 MEZZ.		600X700 10-25M V. 10M@300 35 MPa		700X700 * 20-35M V. 10M@150 45 MPa	600X700 14-25M V. 10M@300 35 MPa	600X700 14-35M V. 10M@300 35 MPa		600X700 14-35M V. 10M@300 35 MPa	600X700 14-30M V. 10M@300 35 MPa	600X700 10-25M V. 10M@300 35 MPa	600X700 10-25M V. 10M@300 35 MPa	600X650 14-25M V. 10M@300 35 MPa	600X700 12-25M V. 10M@300 35 MPa	600X700 14-25M V. 10M@300 35 MPa	350x500 8-25M V. 10M@300 35 MPa
80220 SIZE VERT. REINF. TIES STRENGTH LEVEL 1		600X700 10-25M V. 10M@300 35 MPa	600X700 14-25M V. 10M@300 35 MPa	700X700 * 20-35M V. 10M@150 45 MPa	600X700 14-25M V. 10M@300 35 MPa	600X700 14-35M V. 10M@300 35 MPa	300x600 8-25M V. 10M@300 35 MPa	600X700 14-35M V. 10M@300 35 MPa	600X700 14-30M V. 10M@300 35 MPa	600X700 10-25M V. 10M@300 35 MPa	600X700 10-25M V. 10M@300 35 MPa		600X700 12-25M V. 10M@300 35 MPa	600X700 14-25M V. 10M@300 35 MPa	350x500 8-25M V. 10M@300 35 MPa
77600 SIZE VERT. REINF. TIES STRENGTH LEVEL P1 MEZZ.		600X700 10-25M V. 10M@300 35 MPa	600X700 14-25M V. 10M@300 35 MPa		600X700 14-25M V. 10M@300 35 MPa								600X700 12-25M V. 10M@300 35 MPa		
75000 SIZE VERT. REINF. TIES STRENGTH LEVEL P1		600X700 10-25M V. 10M@300 35 MPa	600X700 14-25M V. 10M@300 35 MPa												
72200 SIZE VERT. REINF. TIES STRENGTH LEVEL P2	600X700 12-25M V. 10M@300 35 MPa		400x1000 14-25M V. 10M@300 35 MPa												
69400 SIZE VERT. REINF. TIES STRENGTH LEVEL P3	600X700 12-25M V. 10M@300 35 MPa		400x1000 14-25M V. 10M@300 35 MPa												
66600 SIZE VERT. REINF. TIES STRENGTH LEVEL P4	600X700 12-25M V. 10M@300 35 MPa		400x1000 14-25M V. 10M@300 35 MPa												
63800 COLUMN LOAD(KN)	4200		4300	8300	5500	8300	600	9000	7400	3700	3400	5900	4100	6300	1600
COLUMN NUMBER	C1		C2												

COLUMN NUMBER LEVEL 2	GC14	GC15	GC16	GC17	GC18	GC19	GC21	GC22	GC23	GC24	GC25	GC44	GC27	GC28	GC29	GC30
84000 SIZE VERT. REINF. TIES STRENGTH LEVEL 1 MEZZ.	600X700 10-25M V. 10M@300 35 MPa		600X700 10-25M V. 10M@300 35 MPa	600X700 10-25M V. 10M@300 35 MPa	600X700 10-25M V. 10M@300 35 MPa	600X700 10-25M V. 10M@300 35 MPa	600X700 10-25M V. 10M@300 35 MPa	600X700 10-25M V. 10M@300 35 MPa	600X700 10-25M V. 10M@300 35 MPa	600X700 10-25M V. 10M@300 35 MPa	600X700 10-25M V. 10M@300 35 MPa		450x600 14-30M V. 10M@300 35 MPa	700X700 10-25M V. 10M@300 35 MPa	600Ø 15-25M V. 10M@300 35 MPa	700X700 10-25M V. 10M@300 35 MPa
80220 SIZE VERT. REINF. TIES STRENGTH LEVEL 1	600X700 10-25M V. 10M@300 35 MPa	300x600 6-25M V. 10M@300 35 MPa	600X700 10-25M V. 10M@300 35 MPa	600X700 10-25M V. 10M@300 35 MPa	600X700 10-25M V. 10M@300 35 MPa	600X700 10-25M V. 10M@300 35 MPa	600X700 10-25M V. 10M@300 35 MPa	600X700 10-25M V. 10M@300 35 MPa	600X700 10-25M V. 10M@300 35 MPa	600X700 10-25M V. 10M@300 35 MPa	600X700 10-25M V. 10M@300 35 MPa	300x600 6-25M V. 10M@300 35 MPa		700X700 10-25M V. 10M@300 35 MPa	600Ø 15-25M V. 10M@300 35 MPa	700X700 10-25M V. 10M@300 35 MPa
77600 SIZE VERT. REINF. TIES STRENGTH LEVEL P1 MEZZ.										600X700 10-25M V. 10M@300 35 MPa						
75000 SIZE VERT. REINF. TIES STRENGTH LEVEL P1										600X700 10-25M V. 10M@300 35 MPa						
72200 SIZE VERT. REINF. TIES STRENGTH LEVEL P2										600X700 10-25M V. 10M@300 35 MPa						
69400 SIZE VERT. REINF. TIES STRENGTH LEVEL P3																
66600 SIZE VERT. REINF. TIES STRENGTH LEVEL P4																
63800 COLUMN LOAD(KN)	2600	400	2500	2400	1800	2800	2600	2300	2000	1400	2600	500	4700	5300	2800	3300
COLUMN NUMBER																

COLUMN NUMBER LEVEL 2								GC31	GC32	GC33	GC34	GC35	GC36
84000 SIZE VERT. REINF. TIES STRENGTH LEVEL 1 MEZZ.								400x1000 14-20M V. 10M@300 35 MPa	700X700 10-25M V. 10M@300 35 MPa	600X600 * 16-30M V. 10M@300 45 MPa	600X700 10-25M V. 10M@300 35 MPa	900X1800 MIN. SEE PLAN 10M@300 35 MPa	350x1150 14-20M V. 10M@300 35 MPa
80220 SIZE VERT. REINF. TIES STRENGTH LEVEL 1								400x1000 14-20M V. 10M@300 35 MPa	700X700 10-25M V. 10M@300 35 MPa	600X600 * 16-30M V. 10M@300 45 MPa	600X700 10-25M V. 10M@300 35 MPa	900X1800 MIN. SEE PLAN 10M@300 35 MPa	350x1150 14-20M V. 10M@300 35 MPa
77600 SIZE VERT. REINF. TIES STRENGTH LEVEL P1 MEZZ.	600X700 14-25M V. 10M@300 35 MPa		600X700 12-35M V. 10M@300 35 MPa	600X700 14-25M V. 10M@300 35 MPa	600X700 10-25M V. 10M@300 35 MPa	600X700 10-25M V. 10M@300 35 MPa	600X700 10-25M V. 10M@300 35 MPa						
75000 SIZE VERT. REINF. TIES STRENGTH LEVEL P1	600X700 14-25M V. 10M@300 35 MPa		600X700 12-35M V. 10M@300 35 MPa	600X700 14-25M V. 10M@300 35 MPa	600X700 10-25M V. 10M@300 35 MPa	600X700 10-25M V. 10M@300 35 MPa	600X700 10-25M V. 10M@300 35 MPa						
72200 SIZE VERT. REINF. TIES STRENGTH LEVEL P2	600X700 14-25M V. 10M@300 35 MPa	400x1000 10-25M V. 10M@300 35 MPa	600X700 14-35M V. 10M@300 35 MPa	600X700 14-25M V. 10M@300 35 MPa	600X700 12-25M V. 10M@300 35 MPa	600X700 12-25M V. 10M@300 35 MPa	600X700 10-25M V. 10M@300 35 MPa						
69400 SIZE VERT. REINF. TIES STRENGTH LEVEL P3	600X700 14-25M V. 10M@300 35 MPa	400x1000 10-25M V. 10M@300 35 MPa	600X700 14-35M V. 10M@300 35 MPa	600X700 14-25M V. 10M@300 35 MPa	600X700 14-25M V. 10M@300 35 MPa	600X700 14-25M V. 10M@300 35 MPa	600X700 12-25M V. 10M@300 35 MPa						
66600 SIZE VERT. REINF. TIES STRENGTH LEVEL P4	600X700 14-25M V. 10M@300 35 MPa	400x1000 10-25M V. 10M@300 35 MPa	600X700 14-35M V. 10M@300 45 MPa	600X700 14-25M V. 10M@300 35 MPa	600X700 14-25M V. 10M@300 35 MPa	600X700 14-25M V. 10M@300 35 MPa	600X700 12-25M V. 10M@300 35 MPa						
63800 COLUMN LOAD(KN)	3500	1000	9500	7300	7300	7300	5000	1600	2800	8700	4500	1270	3400
COLUMN NUMBER	C3	C4	C5	C6	C7	C8	C9						

COLUMN NUMBER LEVEL 2										
84000 SIZE VERT. REINF. TIES STRENGTH LEVEL 1 MEZZ.	700X700 10-25M V. 10M@300 35 MPa									
80220 SIZE VERT. REINF. TIES STRENGTH LEVEL 1	700X700 10-25M V. 10M@300 35 MPa									
77600 SIZE VERT. REINF. TIES STRENGTH LEVEL P1 MEZZ.	700X700 10-25M V. 10M@300 35 MPa	600X700 14-25M V. 10M@300 35 MPa	600X700 10-25M V. 10M@300 35 MPa	600X700 10-25M V. 10M@300 35 MPa	600X700 14-30M V. 10M@300 35 MPa	600X700 10-25M V. 10M@300 35 MPa	600X700 14-30M V. 10M@300 35 MPa	600X700 10-25M V. 10M@300 35 MPa	600X700 12-25M V. 10M@300 35 MPa	600X700 10-25M V. 10M@300 35 MPa
75000 SIZE VERT. REINF. TIES STRENGTH LEVEL P1	700X700 10-25M V. 10M@300 35 MPa	600X700 14-25M V. 10M@300 35 MPa	600X700 10-25M V. 10M@300 35 MPa	600X700 10-25M V. 10M@300 35 MPa	600X700 14-30M V. 10M@300 35 MPa	600X700 10-25M V. 10M@300 35 MPa	600X700 14-30M V. 10M@300 35 MPa	600X700 10-25M V. 10M@300 35 MPa	600X700 12-25M V. 10M@300 35 MPa	600X700 10-25M V. 10M@300 35 MPa
72200 SIZE VERT. REINF. TIES STRENGTH LEVEL P2	700X700 12-25M V. 10M@300 35 MPa	600X700 14-25M V. 10M@300 35 MPa	600X700 12-25M V. 10M@300 35 MPa	600X700 12-25M V. 10M@300 35 MPa	600X700 14-35M V. 10M@300 35 MPa	600X700 12-25M V. 10M@300 35 MPa	600X700 14-30M V. 10M@300 35 MPa	600X700 10-25M V. 10M@300 35 MPa	600X700 14-25M V. 10M@300 35 MPa	600X700 12-25M V. 10M@300 35 MPa
69400 SIZE VERT. REINF. TIES STRENGTH LEVEL P3	700X700 12-25M V. 10M@300 35 MPa	600X700 14-25M V. 10M@300 35 MPa	600X700 14-25M V. 10M@300 35 MPa	600X700 14-25M V. 10M@300 35 MPa	600X700 14-35M V. 10M@300 35 MPa	600X700 14-25M V. 10M@300 35 MPa	600X700 14-30M V. 10M@300 35 MPa	600X700 10-25M V. 10M@300 35 MPa	600X700 14-25M V. 10M@300 35 MPa	600X700 14-25M V. 10M@300 35 MPa
66600 SIZE VERT. REINF. TIES STRENGTH LEVEL P4	700X700 12-25M V. 10M@300 35 MPa	600X700 14-25M V. 10M@300 35 MPa	600X700 14-25M V. 10M@300 35 MPa	600X700 14-25M V. 10M@300 35 MPa	600X700 14-35M V. 10M@300 45 MPa	600X700 14-25M V. 10M@300 35 MPa	600X700 14-30M V. 10M@300 35 MPa	600X700 10-25M V. 10M@300 35 MPa	600X700 14-25M V. 10M@300 35 MPa	600X700 14-25M V. 10M@300 35 MPa
63800 COLUMN LOAD(KN)	5000	7400	6800	6700	9100	6800	3800	2800	7100	6600
COLUMN NUMBER	C10	C11	C12	C13	C14	C15	C16	C17	C18	C19

COLUMN NUMBER LEVEL 2								
84000 SIZE VERT. REINF. TIES STRENGTH LEVEL 1 MEZZ.				600X700 12-25M V. 10M@300 35 MPa		600X700 12-25M V. 10M@300 35 MPa		
80220 SIZE VERT. REINF. TIES STRENGTH LEVEL 1				600X700 12-25M V. 10M@300 35 MPa		600X700 12-25M V. 10M@300 35 MPa		
77600 SIZE VERT. REINF. TIES STRENGTH LEVEL P1 MEZZ.	600X700 10-25M V. 10M@300 35 MPa	600X700 12-25M V. 10M@300 35 MPa	600X700 12-25M V. 10M@300 35 MPa	600X700 12-30M V. 10M@300 35 MPa	600X700 10-25M V. 10M@300 35 MPa	600X700 12-25M V. 10M@300 35 MPa	600X700 12-25M V. 10M@300 35 MPa	600X700 12-25M V. 10M@300 35 MPa
75000 SIZE VERT. REINF. TIES STRENGTH LEVEL P1	600X700 10-25M V. 10M@300 35 MPa	600X700 12-25M V. 10M@300 35 MPa	600X700 12-25M V. 10M@300 35 MPa	600X700 12-30M V. 10M@300 35 MPa	600X700 10-25M V. 10M@300 35 MPa	600X700 12-25M V. 10M@300 35 MPa	600X700 12-25M V. 10M@300 35 MPa	600X700 12-25M V. 10M@300 35 MPa
72200 SIZE VERT. REINF. TIES STRENGTH LEVEL P2	600X700 12-25M V. 10M@300 35 MPa	600X700 12-30M V. 10M@300 35 MPa	600X700 12-25M V. 10M@300 35 MPa	600X700 12-30M V. 10M@300 35 MPa	600X700 12-25M V. 10M@300 35 MPa	600X700 12-25M V. 10M@300 35 MPa	600X700 12-25M V. 10M@300 35 MPa	600X700 12-25M V. 10M@300 35 MPa
69400 SIZE VERT. REINF. TIES STRENGTH LEVEL P3	600X700 14-25M V. 10M@300 35 MPa	600X700 14-30M V. 10M@300 35 MPa	600X700 16-25M V. 10M@300 35 MPa	600X700 12-35M V. 10M@300 35 MPa	600X700 14-25M V. 10M@300 35 MPa	600X700 12-25M V. 10M@300 35 MPa	600X700 12-25M V. 10M@300 35 MPa	600X700 14-25M V. 10M@300 35 MPa
66600 SIZE VERT. REINF. TIES STRENGTH LEVEL P4	600X700 14-25M V. 10M@300 35 MPa	600X700 14-30M V. 10M@300 35 MPa	600X700 16-25M V. 10M@300 35 MPa	600X700 12-35M V. 10M@300 35 MPa	600X700 14-25M V. 10M@300 35 MPa	600X700 12-25M V. 10M@300 35 MPa	600X700 12-25M V. 10M@300 35 MPa	600X700 14-25M V. 10M@300 35 MPa
63800 COLUMN LOAD(KN)	7300	8100	7950	8400	6600	3400	2800	7100
COLUMN NUMBER	C20	C21	C22	C23	C24	C25	C26	C27

COLUMN NUMBER LEVEL 2	GC37		GC38	GC39								GC40	COLUMN NUMBER LEVEL 2
84000 SIZE VERT. REINF. TIES STRENGTH LEVEL 1 MEZZ.	600X700 10-25M V. 10M@300 35 MPa		700X700 14-25M V. 10M@300 35 MPa	600X750 16-35M V. 10M@300 45 MPa				600X700 10-25M V. 10M@300 35 MPa				600X700 14-35M V. 10M@300 35 MPa	84000 SIZE VERT. REINF. TIES STRENGTH LEVEL 1 MEZZ.
80220 SIZE VERT. REINF. TIES STRENGTH LEVEL 1	600X700 10-25M V. 10M@300 35 MPa		700X700 14-25M V. 10M@300 35 MPa	600X750 16-35M V. 10M@300 45 MPa				600X700 10-25M V. 10M@300 35 MPa				600X700 14-35M V. 10M@300 35 MPa	80220 SIZE VERT. REINF. TIES STRENGTH LEVEL 1
77600 SIZE VERT. REINF. TIES STRENGTH LEVEL P1 MEZZ.		600X700 10-25M V. 10M@300 35 MPa				600X700 14-30M V. 10M@300 35 MPa	600X700 12-25M V. 10M@300 35 MPa	600X700 12-25M V. 10M@300 35 MPa		600X700 10-25M V. 10M@300 35 MPa	600X700 14-35M V. 10M@300 35 MPa		77600 SIZE VERT. REINF. TIES STRENGTH LEVEL P1 MEZZ.
75000 SIZE VERT. REINF. TIES STRENGTH LEVEL P1		600X700 10-25M V. 10M@300 35 MPa			600X700 10-25M V. 10M@300 35 MPa	600X700 14-30M V. 10M@300 35 MPa	600X700 12-25M V. 10M@300 35 MPa	600X700 12-25M V. 10M@300 35 MPa	600X700 14-35M V. 10M@300 35 MPa	600X700 10-25M V. 10M@300 35 MPa	600X700 14-35M V. 10M@300 35 MPa		75000 SIZE VERT. REINF. TIES STRENGTH LEVEL P1
72200 SIZE VERT. REINF. TIES STRENGTH LEVEL P2		600X700 12-25M V. 10M@300 35 MPa			600X700 10-25M V. 10M@300 35 MPa	600X700 14-35M V. 10M@300 35 MPa	600X700 12-30M V. 10M@300 35 MPa	600X700 12-25M V. 10M@300 35 MPa	600X700 14-35M V. 10M@300 45 MPa	600X700 10-25M V. 10M@300 35 MPa	600X700 14-35M V. 10M@300 45 MPa		72200 SIZE VERT. REINF. TIES STRENGTH LEVEL P2
69400 SIZE VERT. REINF. TIES STRENGTH LEVEL P3		600X700 12-25M V. 10M@300 35 MPa			600X700 12-25M V. 10M@300 35 MPa	600X700 14-35M V. 10M@300 35 MPa	600X700 12-35M V. 10M@300 35 MPa	600X700 12-30M V. 10M@300 35 MPa	600X700 14-35M V. 10M@300 45 MPa	600X700 12-25M V. 10M@300 35 MPa	600X700 14-35M V. 10M@300 45 MPa		69400 SIZE VERT. REINF. TIES STRENGTH LEVEL P3
66600 SIZE VERT. REINF. TIES STRENGTH LEVEL P4		600X700 12-25M V. 10M@300 35 MPa			600X700 12-25M V. 10M@300 35 MPa	600X700 14-35M V. 10M@300 45 MPa	600X700 12-35M V. 10M@300 35 MPa	600X700 12-35M V. 10M@300 35 MPa	600X800 16-35M V. 10M@300 45 MPa	600X700 12-25M V. 10M@300 35 MPa	600X800 16-35M V. 10M@300 45 MPa		66600 SIZE VERT. REINF. TIES STRENGTH LEVEL P4
63800 COLUMN LOAD(KN)	4200	6500	4500	11300	5400	9100	8200	8150	11000	5900	11000	7000	63800 COLUMN LOAD(KN)
COLUMN NUMBER		C28			C29	C30	C31	C32	C33	C34	C35		COLUMN NUMBER

CONCRETE COLUMN SCHEDULE (LEVEL 2 AND BELOW)

COLUMN NUMBER LEVEL 2		GC41					GC42	GC43					GC45	GC47	GC46
84000 SIZE VERT. REINF. TIES STRENGTH LEVEL 1 MEZZ.		600X800 * 18-35M V. 10M@300 45 MPa					600X700 12-25M V. 10M@300 35 MPa			700X800 * 22-35M V. 10M@300 45 MPa			600X700 14-35M V. 10M@300 45 MPa	600X700 14-30M V. 10M@300 35 MPa	300x1600 20-25M V. 10M@300 35 MPa
80220 SIZE VERT. REINF. TIES STRENGTH LEVEL 1		600X800 * 18-35M V. 10M@300 45 MPa					600X700 12-25M V. 10M@300 35 MPa	300x600 6-25M V. 10M@300 35 MPa		700X800 * 22-35M V. 10M@300 45 MPa			600X700 14-35M V. 10M@300 45 MPa	600X700 14-30M V. 10M@300 35 MPa	300x1600 20-25M V. 10M@300 35 MPa
77600 SIZE VERT. REINF. TIES STRENGTH LEVEL P1 MEZZ.	600X900 14-35M V. 10M@300 50 MPa		600X700 14-35M V. 10M@300 35 MPa	600X700 10-25M V. 10M@300 35 MPa	600X700 10-25M V. 10M@300 35 MPa	600X700 10-25M V. 10M@300 35 MPa			600X700 10-25M V. 10M@300 35 MPa	600X700 14-35M V. 10M@300 35 MPa	600X700 10-25M V. 10M@300 35 MPa	600X750 18-35M V. 10M@300 50 MPa	1250X900 18-35M V. 10M@300 35 MPa		
75000 SIZE VERT. REINF. TIES STRENGTH LEVEL P1	600X900 14-35M V. 10M@300 50 MPa		600X700 14-35M V. 10M@300 35 MPa	600X700 10-25M V. 10M@300 35 MPa	600X700 10-25M V. 10M@300 35 MPa	600X700 10-25M V. 10M@300 35 MPa			600X700 10-25M V. 10M@300 35 MPa	600X700 14-35M V. 10M@300 35 MPa	600X700 10-25M V. 10M@300 35 MPa	600X750 18-35M V. 10M@300 50 MPa			
72200 SIZE VERT. REINF. TIES STRENGTH LEVEL P2	600X800 14-35M V. 10M@300 50 MPa		600X700 14-35M V. 10M@300 35 MPa	600X700 12-25M V. 10M@300 35 MPa	600X700 10-25M V. 10M@300 35 MPa	600X700 10-25M V. 10M@300 35 MPa			600X700 12-25M V. 10M@300 35 MPa	600X700 14-35M V. 10M@300 35 MPa	600X700 10-25M V. 10M@300 35 MPa	600X900 18-35M V. 10M@300 50 MPa	700X900 18-35M V. 10M@300 35 MPa		
69400 SIZE VERT. REINF. TIES STRENGTH LEVEL P3	600X800 16-35M V. 10M@300 50 MPa		600X700 14-35M V. 10M@300 45 MPa	600X700 16-25M V. 10M@300 35 MPa	600X700 12-25M V. 10M@300 35 MPa	600X700 12-25M V. 10M@300 35 MPa			600X700 14-25M V. 10M@300 35 MPa	600X700 14-35M V. 10M@300 35 MPa	600X700 12-25M V. 10M@300 35 MPa	600X900 18-35M V. 10M@300 50 MPa			
66600 SIZE VERT. REINF. TIES STRENGTH LEVEL P4	600X800 16-35M V. 10M@300 50 MPa		600X700 14-35M V. 10M@300 45 MPa	600X700 16-25M V. 10M@300 35 MPa	600X700 12-25M V. 10M@300 35 MPa	600X700 12-25M V. 10M@300 35 MPa			600X700 14-25M V. 10M@300 35 MPa	600X700 14-35M V. 10M@300 35 MPa	600X700 12-25M V. 10M@300 35 MPa	600X1000 20-35M V. 10M@300 50 MPa			
63800 COLUMN LOAD(KN)	12200	11800	10050	7900	4800	5400	1600	400	6900	8400	6000	15700	6700	8000	2200
COLUMN NUMBER	C36		C37	C38	C39	C40			C41	C42	C43	C44			

COLUMN NUMBER LEVEL 2		GC48					GC49					GC50		GC51	GC51a
84000 SIZE VERT. REINF. TIES STRENGTH LEVEL 1 MEZZ.		600X700 10-25M V. 10M@300 35 MPa					600X700 10-25M V. 10M@300 35 MPa		600X700 10-25M V. 10M@300 35 MPa			600X750 14-35M V. 10M@300 45 MPa		500X900 12-30M V. 10M@300 35 MPa	500X900 12-25M V. 10M@300 35 MPa
80220 SIZE VERT. REINF. TIES STRENGTH LEVEL 1		600X700 10-25M V. 10M@300 35 MPa					600X700 10-25M V. 10M@300 35 MPa		600X700 10-25M V. 10M@300 35 MPa			600X750 14-35M V. 10M@300 45 MPa		500X900 12-30M V. 10M@300 35 MPa	500X900 12-25M V. 10M@300 35 MPa
77600 SIZE VERT. REINF. TIES STRENGTH LEVEL P1 MEZZ.	600X700 14-25M V. 10M@300 35 MPa		600X700 14-35M V. 10M@300 35 MPa	600X700 10-25M V. 10M@300 35 MPa	600X700 10-25M V. 10M@300 35 MPa	600X700 10-25M V. 10M@300 35 MPa		600X700 10-25M V. 10M@300 35 MPa	600X700 10-25M V. 10M@300 35 MPa	600X700 10-25M V. 10M@300 35 MPa	600X700 12-25M V. 10M@300 35 MPa		600X700 14-35M V. 10M@300 45 MPa		
75000 SIZE VERT. REINF. TIES STRENGTH LEVEL P1	600X700 14-25M V. 10M@300 35 MPa		600X700 14-35M V. 10M@300 35 MPa	600X700 10-25M V. 10M@300 35 MPa	600X700 10-25M V. 10M@300 35 MPa	600X700 10-25M V. 10M@300 35 MPa		600X700 10-25M V. 10M@300 35 MPa	600X700 10-25M V. 10M@300 35 MPa	600X700 10-25M V. 10M@300 35 MPa	600X700 12-25M V. 10M@300 35 MPa		600X700 14-35M V. 10M@300 45 MPa		
72200 SIZE VERT. REINF. TIES STRENGTH LEVEL P2	600X700 14-25M V. 10M@300 35 MPa		600X700 14-35M V. 10M@300 45 MPa	600X700 12-25M V. 10M@300 35 MPa	600X700 10-25M V. 10M@300 35 MPa	600X700 10-25M V. 10M@300 35 MPa		600X700 10-25M V. 10M@300 35 MPa	600X700 10-25M V. 10M@300 35 MPa	600X700 10-25M V. 10M@300 35 MPa	600X700 14-25M V. 10M@300 35 MPa		600X700 14-35M V. 10M@300 45 MPa		
69400 SIZE VERT. REINF. TIES STRENGTH LEVEL P3	600X700 14-30M V. 10M@300 35 MPa		600X700 14-35M V. 10M@300 45 MPa	600X700 14-25M V. 10M@300 35 MPa	600X700 12-25M V. 10M@300 35 MPa	600X700 12-25M V. 10M@300 35 MPa		600X700 12-25M V. 10M@300 35 MPa	600X700 12-25M V. 10M@300 35 MPa	600X700 12-25M V. 10M@300 35 MPa	600X700 14-30M V. 10M@300 35 MPa		600X700 14-35M V. 10M@300 45 MPa		
66600 SIZE VERT. REINF. TIES STRENGTH LEVEL P4	600X700 14-35M V. 10M@300 35 MPa		600X800 16-35M V. 10M@300 45 MPa	600X700 14-25M V. 10M@300 35 MPa	600X700 12-25M V. 10M@300 35 MPa	600X700 12-25M V. 10M@300 35 MPa		600X700 12-25M V. 10M@300 35 MPa	600X700 12-25M V. 10M@300 35 MPa	600X700 12-25M V. 10M@300 35 MPa	600X700 14-35M V. 10M@300 35 MPa		600X700 14-35M V. 10M@300 50 MPa		
63800 COLUMN LOAD(KN)	8300	4200	11100	7000	3800	4200	1700	4500	4100	4700	8400	10000	11500	7100	
COLUMN NUMBER	C45		C46	C47	C48	C49		C50	C51	C52	C53		C54		

COLUMN NUMBER LEVEL 2		GC52					GC53			GC54		GC54a	GC55	GC56
84000 SIZE VERT. REINF. TIES STRENGTH LEVEL 1 MEZZ.		600X700 12-30M V. 10M@300 35 MPa					600X700 10-25M V. 10M@300 35 MPa			600X700 10-25M V. 10M@300 35 MPa		500X900 12-25M V. 10M@300 35 MPa	600X700 12-30M V. 10M@300 35 MPa SEE S1-07 FOR ADDITIONAL DOWELS	500X900 12-25M V. 10M@300 35 MPa
80220 SIZE VERT. REINF. TIES STRENGTH LEVEL 1		600X700 12-30M V. 10M@300 35 MPa					600X700 10-25M V. 10M@300 35 MPa			600X700 10-25M V. 10M@300 35 MPa		500X900 12-25M V. 10M@300 35 MPa	600X700 12-30M V. 10M@300 35 MPa	500X900 12-25M V. 10M@300 35 MPa
77600 SIZE VERT. REINF. TIES STRENGTH LEVEL P1 MEZZ.	600X700 14-30M V. 10M@300 35 MPa		600X700 14-30M V. 10M@300 35 MPa	600X700 12-25M V. 10M@300 35 MPa	600X700 10-25M V. 10M@300 35 MPa	600X700 10-25M V. 10M@300 35 MPa		600X700 10-25M V. 10M@300 35 MPa	600X700 10-25M V. 10M@300 35 MPa		600X700 10-25M V. 10M@300 35 MPa		600X700 12-30M V. 10M@300 35 MPa	
75000 SIZE VERT. REINF. TIES STRENGTH LEVEL P1	600X700 14-30M V. 10M@300 35 MPa		600X700 14-30M V. 10M@300 35 MPa	600X700 12-25M V. 10M@300 35 MPa	600X700 10-25M V. 10M@300 35 MPa	600X700 10-25M V. 10M@300 35 MPa		600X700 10-25M V. 10M@300 35 MPa	600X700 10-25M V. 10M@300 35 MPa		600X700 10-25M V. 10M@300 35 MPa		600X700 12-30M V. 10M@300 35 MPa	
72200 SIZE VERT. REINF. TIES STRENGTH LEVEL P2	600X700 14-30M V. 10M@300 35 MPa		600X700 14-35M V. 10M@300 35 MPa	600X700 12-25M V. 10M@300 35 MPa	600X700 10-25M V. 10M@300 35 MPa	600X700 10-25M V. 10M@300 35 MPa		600X700 10-25M V. 10M@300 35 MPa	600X700 10-25M V. 10M@300 35 MPa		600X700 10-25M V. 10M@300 35 MPa		600X700 12-30M V. 10M@300 35 MPa	
69400 SIZE VERT. REINF. TIES STRENGTH LEVEL P3	600X700 14-35M V. 10M@300 35 MPa		600X700 14-35M V. 10M@300 45 MPa	600X700 14-25M V. 10M@300 35 MPa	600X700 12-25M V. 10M@300 35 MPa	600X700 12-25M V. 10M@300 35 MPa		600X700 12-25M V. 10M@300 35 MPa	600X700 12-25M V. 10M@300 35 MPa		600X700 10-25M V. 10M@300 35 MPa			
66600 SIZE VERT. REINF. TIES STRENGTH LEVEL P4	600X700 14-35M V. 10M@300 35 MPa		600X800 14-35M V. 10M@300 45 MPa	600X700 14-25M V. 10M@300 35 MPa	600X700 12-25M V. 10M@300 35 MPa	600X700 12-25M V. 10M@300 35 MPa		600X700 12-25M V. 10M@300 35 MPa	600X700 12-25M V. 10M@300 35 MPa		600X700 10-25M V. 10M@300 35 MPa			
63800 COLUMN LOAD(KN)	9000	7100	9900	6300	3600	4100	1700	3400	4400	4000	4400		7200	4700
COLUMN NUMBER	C55		C56	C57	C58	C59		C60	C61		C62			

COLUMN NUMBER LEVEL 2		GC57				GC58	GC59	GC60	GC61	GC62	GC63	GC64	GC65	GC66
84000 SIZE VERT. REINF. TIES STRENGTH LEVEL 1 MEZZ.		600X700 10-25M V. 10M@300 35 MPa				600X700 10-25M V. 10M@300 35 MPa	600X700 10-25M V. 10M@300 35 MPa	600X700 12-25M V. 10M@300 35 MPa SEE S1-07 FOR ADDITIONAL DOWELS	600X700 14-25M V. 10M@300 35 MPa	500X900 10-25M V. 10M@300 35 MPa	600X700 10-25M V. 10M@300 35 MPa	600X700 10-25M V. 10M@300 35 MPa	500X900 10-25M V. 10M@300 35 MPa	600X700 10-25M V. 10M@300 35 MPa
80220 SIZE VERT. REINF. TIES STRENGTH LEVEL 1		600X700 10-25M V. 10M@300 35 MPa				600X700 10-25M V. 10M@300 35 MPa	600X700 10-25M V. 10M@300 35 MPa	600X700 12-25M V. 10M@300 35 MPa	600X700 14-25M V. 10M@300 35 MPa	500X900 10-25M V. 10M@300 35 MPa	600X700 10-25M V. 10M@300 35 MPa	600X700 10-25M V. 10M@300 35 MPa	500X900 10-25M V. 10M@300 35 MPa	600X700 10-25M V. 10M@300 35 MPa
77600 SIZE VERT. REINF. TIES STRENGTH LEVEL P1 MEZZ.			600X700 10-25M V. 10M@300 35 MPa	600X700 10-25M V. 10M@300 35 MPa	600X700 10-25M V. 10M@300 35 MPa		600X700 10-25M V. 10M@300 35 MPa							
75000 SIZE VERT. REINF. TIES STRENGTH LEVEL P1			600X700 10-25M V. 10M@300 35 MPa	600X700 10-25M V. 10M@300 35 MPa	600X700 10-25M V. 10M@300 35 MPa		600X700 10-25M V. 10M@300 35 MPa							
72200 SIZE VERT. REINF. TIES STRENGTH LEVEL P2			600X700 10-25M V. 10M@300 35 MPa	600X700 10-25M V. 10M@300 35 MPa	600X700 10-25M V. 10M@300 35 MPa		600X700 10-25M V. 10M@300 35 MPa							
69400 SIZE VERT. REINF. TIES STRENGTH LEVEL P3	600X700 10-25M V. 10M@300 35 MPa		600X700 12-25M V. 10M@300 35 MPa	600X700 12-25M V. 10M@300 35 MPa	600X700 12-25M V. 10M@300 35 MPa									
66600 SIZE VERT. REINF. TIES STRENGTH LEVEL P4	600X700 10-25M V. 10M@300 35 MPa		600X700 12-25M V. 10M@300 35 MPa	600X700 12-25M V. 10M@300 35 MPa	600X700 12-25M V. 10M@300 35 MPa									
63800 COLUMN LOAD(KN)	2700	1600	5100	6000	4800	1800	2800	5400	6900	1500	3100	3500	4500	3600
COLUMN NUMBER	C63		C64	C65	C66									

COLUMN NUMBER LEVEL 2	GC67	GC68	GC70	GC72	GC73	GC74	GC75	GC76	GC77	GC78	GC79	GC80	GC81			COLUMN NUMBER LEVEL 2
84000 SIZE VERT. REINF. TIES STRENGTH LEVEL 1 MEZZ.	600Ø 10-25M V. 10M@300 35 MPa	600X700 10-25M V. 10M@300 35 MPa	600Ø 10-25M V. 10M@300 35 MPa	600X700 10-25M V. 10M@300 35 MPa	400x400 6-20M V. 10M@300 35 MPa	500X900 10-25M V. 10M@300 35 MPa	500X900 10-25M V. 10M@300 35 MPa	500X900 10-25M V. 10M@300 35 MPa	500X900 10-25M V. 10M@300 35 MPa	500X900 10-25M V. 10M@300 35 MPa	500X900 10-25M V. 10M@300 35 MPa	500X900 10-25M V. 10M@300 35 MPa	500X900 10-25M V. 10M@300 35 MPa			84000 SIZE VERT. REINF. TIES STRENGTH LEVEL 1 MEZZ.
80220 SIZE VERT. REINF. TIES STRENGTH LEVEL 1	600Ø 10-25M V. 10M@300 35 MPa	600X700 10-25M V. 10M@300 35 MPa	600Ø 10-25M V. 10M@300 35 MPa	600X700 10-25M V. 10M@300 35 MPa		500X900 10-25M V. 10M@300 35 MPa	500X900 10-25M V. 10M@300 35 MPa	500X900 10-25M V. 10M@300 35 MPa	500X900 10-25M V. 10M@300 35 MPa	500X900 10-25M V. 10M@300 35 MPa	500X900 10-25M V. 10M@300 35 MPa	500X900 10-25M V. 10M@300 35 MPa	500X900 10-25M V. 10M@300 35 MPa			80220 SIZE VERT. REINF. TIES STRENGTH LEVEL 1
77600 SIZE VERT. REINF. TIES STRENGTH LEVEL P1 MEZZ.																77600 SIZE VERT. REINF. TIES STRENGTH LEVEL P1 MEZZ.
75000 SIZE VERT. REINF. TIES STRENGTH LEVEL P1																75000 SIZE VERT. REINF. TIES STRENGTH LEVEL P1
72200 SIZE VERT. REINF. TIES STRENGTH LEVEL P2																72200 SIZE VERT. REINF. TIES STRENGTH LEVEL P2
69400 SIZE VERT. REINF. TIES STRENGTH LEVEL P3																69400 SIZE VERT. REINF. TIES STRENGTH LEVEL P3
66600 SIZE VERT. REINF. TIES STRENGTH LEVEL P4																66600 SIZE VERT. REINF. TIES STRENGTH LEVEL P4
63800 COLUMN LOAD(KN)	3600	3600	2400	7100	2200	1100			1300		1200	1100	2500			63800 COLUMN LOAD(KN)
COLUMN NUMBER														C67	C68	COLUMN NUMBER

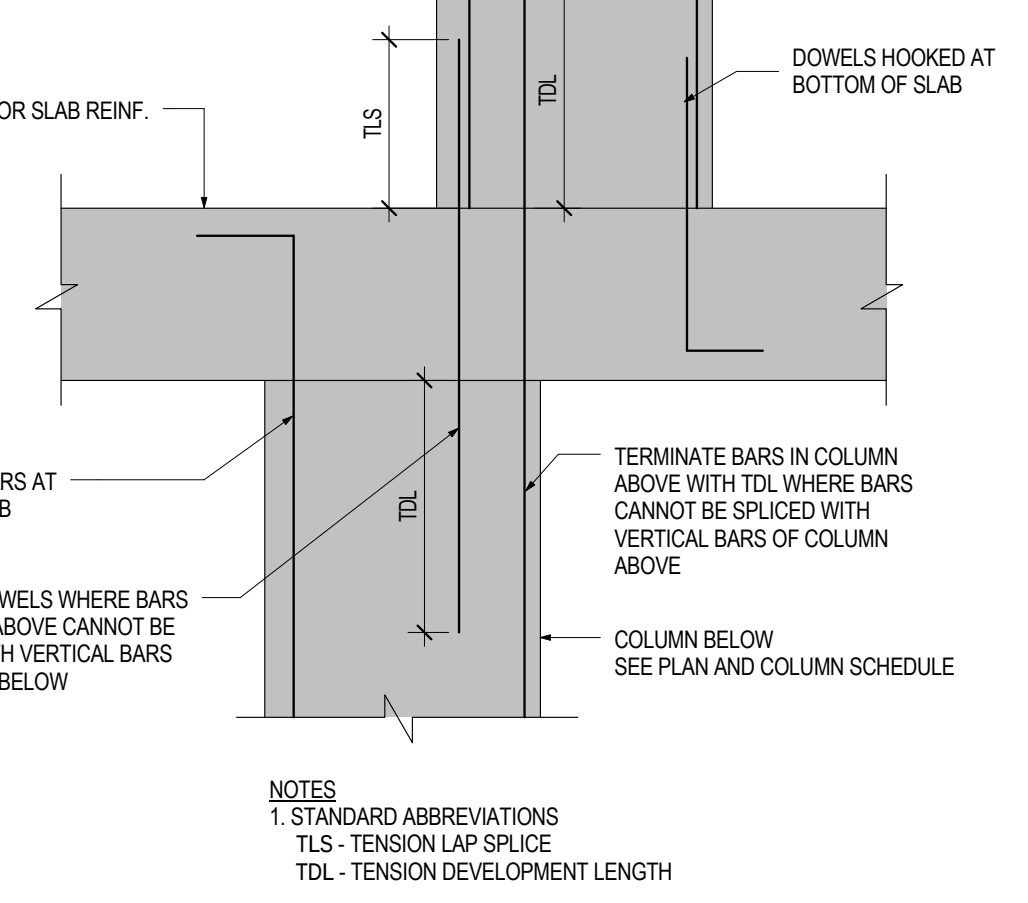

NOTES
1. STANDARD ABBREVIATIONS
TLS - TENSION LAP SPLICE
TDL - TENSION DEVELOPMENT LENGTH

TYPICAL DETAIL FOR COLUMNS NOT LINED UP WITH COLUMNS BELOW

1 : 10

CONCRETE COLUMN SCHEDULE NOTES

1. COLUMN LOADS PROVIDED ARE ULS FACTORED VALUES AND INCLUDES LIVE LOAD REDUCTION FACTOR.
2. FOR LOCATION OF COLUMNS WITH RESPECT TO GRID LINES AND SLAB EDGES SEE ARCHITECTURAL DRAWINGS AND PLANS.
3. SLAB ELEVATIONS VARY. SEE ARCHITECTURAL DRAWINGS.
4. CONCRETE STRENGTH AS NOTED IN SCHEDULE.
5. PROVIDE DOWELS FROM COLUMN CAP INTO COLUMN TO MATCH VERTICALS EXCEPT AS NOTED IN SCHEDULE.
6. PROVIDE COMPRESSION LAP SPLICES (CLS) FOR COLUMNS. DOWEL LENGTHS WILL BE TWICE CLS. IN CASE COLUMNS ARE SPLICED AT MIDHEIGHT, PROVIDE TENSION LAP SPLICES (TLS)
7. LAP SPLICES FOR REINFORCING BARS GREATER THAN 35M ARE NOT PERMITTED. PROVIDE APPROVED MECHANICAL SPLICES.
8. WHERE COLUMN FACES ARE OFFSET 75mm OR MORE, SPLICES OF VERTICAL BARS ADJACENT TO THE OFFSET FACE SHALL BE MADE BY SEPARATE DOWELS LAPPED AS SPECIFIED IN NOTE 6 ABOVE.
9. WHERE ADDITIONAL REINFORCING STEEL IS REQUIRED IN THE LIFT ABOVE, PROVIDE DOWELS AS PER NOTE #6 TO MATCH REINFORCING ABOVE.
10. PROVIDE BENDING MOMENT BARS AT TOP OF ALL COLUMNS AS FOLLOWS:

    PROVIDE 4-20 EXCEPT AS NOTED IN SCHEDULE THUS (8-25).
    SEE ALSO TYPICAL BENDING MOMENT BARS PLACEMENT DIAGRAM.

    20M BAR: 800 / 800   25M BAR: 1250 / 1250

11. PROVIDE 2-10M TIES AROUND COLUMN REINFORCING WITHIN DEPTH OF SLABS ON ALL PERIMETER COLUMNS.
12. NO OPENINGS OTHER THAN THOSE INDICATED ON PLAN OR ELEVATIONS ARE TO BE MADE IN COLUMNS WITHOUT APPROVAL OF ENGINEER. SUBMIT DRAWINGS INDICATING ADDITIONAL OPENINGS FOR APPROVAL.
13. WHERE MASONRY ABUTS OR FACES A COLUMN PROVIDE STANDARD DOVETAIL ANCHOR SLOTS AT EVERY 3RD BLOCK COURSE, FROM COLUMNS INTO MORTAR JOINTS.
14. SEE ALSO SECTIONS, PLANS, ELEVATIONS AND DETAILS.
15. IN CASE COLUMNS AND WALLS OVERLAP THEY SHOULD BE POURED MONOLITHICALLY, SEE T-C41.
16. REFER TO NOTES AND TYPICAL DETAILS.

*** INDICATES STAGGER SPLICE EVERY OTHER BAR AT FLOOR LEVEL AND MID HEIGHT.**

Contractor Must Check And Verify All Dimensions On The Job.

Do Not Scale The Drawings.

All Drawings, Specifications And Related Documents Are The Copyright Of The Architect And Must Be Returned Upon Request.

Reproduction Of Drawings, Specifications And Related Documents In Part Or Whole Is Forbidden Without The Architects Written Permission.

This Drawing Is Not To Be Used For Construction Until Signed ByThe Architect.

Date:

DEC.18,2015   DEC.18,2015

stephenson ENGINEERING
2550 Victoria Park Ave. Suite 602
Toronto ON M2J 5A9 | Tel: (416) 635 9970
www.stephenson-eng.com | info@stephenson-eng.com

No	Revision	Date

No	Issued For	Date
7	ISSUED FOR STEEL TENDER	DEC.18,2015
4	BUILDING PERMIT RESUBMISSION	SEPT.21,2015
3	BUILDING PERMIT RESUBMISSION	JULY 22,2015
2	BUILDING PERMIT SUBMISSION	JUNE 12,2015
1	ISSUED FOR WT REVIEW	MAY 01,2015

AQUAVISTA
AT BAYSIDE TORONTO

Drawing Title
COLUMN SCHEDULES - LEVEL 2 AND BELOW

Project
Hines TRIDEL®
AQUAVISTA
Block 3 - R3 & R4
Merchant's Whart
Toronto, ON

Scale: As indicated
Drawn by: DC
Checked by: IA/BBS
Project No.: 20140031
Date: DEC.18,2015
Drawing No.: S2-01

Plot Date: 3/9/2016 10:01:32 AM

CONCRETE COLUMN SCHEDULE (LEVEL 2 ABOVE)

LEVEL 14	TC1	TC2	TC3	TC4	TC5	TC6	TC7	TC8	TC9	TC10	TC11	TC12	TC13	TC14	TC15
124050 SIZE VERT. REINF. TIES STRENGTH LEVEL 13			300x600 10-30M V. 10M@300 25 MPa						300x600 8-25M V. 10M@300 25 MPa				300x600 8-20M V. 10M@300 25 MPa	300x600 8-20M V. 10M@300 25 MPa	
118950 SIZE VERT. REINF. TIES STRENGTH LEVEL 12	300x600 8-20M V. 10M@300 25 MPa						300x600 8-20M V. 10M@300 25 MPa		300x600 8-25M V. 10M@300 25 MPa						
115000 SIZE VERT. REINF. TIES STRENGTH LEVEL 11	300x600 8-20M V. 10M@300 25 MPa						300x600 8-20M V. 10M@300 25 MPa								
111750 SIZE VERT. REINF. TIES STRENGTH LEVEL 10		300x600 8-20M V. 10M@300 25 MPa		300x1150 12-20M V. 10M@300 25 MPa				300x600 8-20M V. 10M@300 25 MPa			300x600 8-20M V. 10M@300 25 MPa				
108500 SIZE VERT. REINF. TIES STRENGTH LEVEL 9		300x600 8-20M V. 10M@300 25 MPa			300x600 8-20M V. 10M@300 25 MPa			300x600 8-20M V. 10M@300 25 MPa			300x600 8-20M V. 10M@300 25 MPa				
105250 SIZE VERT. REINF. TIES STRENGTH LEVEL 8		300x600 8-20M V. 10M@300 25 MPa			300x600 8-20M V. 10M@300 25 MPa			300x600 8-20M V. 10M@300 25 MPa			300x600 8-20M V. 10M@300 25 MPa				
102300 SIZE VERT. REINF. TIES STRENGTH LEVEL 7		300x600 8-20M V. 10M@300 25 MPa				735x600 10-25M V. 10M@300 25 MPa		300x600 8-20M V. 10M@300 25 MPa			300x600 8-20M V. 10M@300 25 MPa				
99350 SIZE VERT. REINF. TIES STRENGTH LEVEL 6										300x600 8-20M V. 10M@300 25 MPa		500x600 10-20M V. 10M@300 25 MPa			300x600 8-20M V. 10M@300 25 MPa
96100 SIZE VERT. REINF. TIES STRENGTH LEVEL 5										300x600 8-20M V. 10M@300 25 MPa		300x600 8-20M V. 10M@300 25 MPa			300x600 8-20M V. 10M@300 25 MPa
93150 SIZE VERT. REINF. TIES STRENGTH LEVEL 4										300x600 8-20M V. 10M@300 25 MPa		300x600 8-20M V. 10M@300 25 MPa			300x600 8-20M V. 10M@300 25 MPa
90200 SIZE VERT. REINF. TIES STRENGTH LEVEL 3										300x600 8-20M V. 10M@300 25 MPa		300x600 8-20M V. 10M@300 25 MPa			300x600 8-20M V. 10M@300 25 MPa
87250 SIZE VERT. REINF. TIES STRENGTH LEVEL 2										300x600 8-20M V. 10M@300 25 MPa		300x600 8-20M V. 10M@300 25 MPa			300x600 8-20M V. 10M@300 25 MPa
84000 COLUMN LOAD(KN)	400	900	100	750	1000	1200	400	1100	500	1100	1200	2100	300	300	1500
COLUMN NUMBER	TC1	TC2	TC3	TC4	TC5	TC6	TC7	TC8	TC9	TC10	TC11	TC12	TC13	TC14	TC15

LEVEL 14	TC16	TC17	TC18	TC19	TC20	TC21	TC23	TC75	TC24	TC25	TC26	TC27	TC30	TC31	TC32
124050 SIZE VERT. REINF. TIES STRENGTH LEVEL 13	300x600 8-20M V. 10M@300 25 MPa		300x600 8-20M V. 10M@300 25 MPa	300x600 8-20M V. 10M@300 25 MPa		300x740 SEE SETAIL 10M@200 35 MPa			450Ø 8-20M V. 10M@300 25 MPa						
118950 SIZE VERT. REINF. TIES STRENGTH LEVEL 12	300x600 8-20M V. 10M@300 25 MPa		300x600 8-20M V. 10M@300 25 MPa			300x740 SEE SETAIL 10M@200 35 MPa						300x600 8-20M V. 10M@300 25 MPa		300x600 8-20M V. 10M@300 25 MPa	
115000 SIZE VERT. REINF. TIES STRENGTH LEVEL 11	300x600 8-20M V. 10M@300 25 MPa		300x600 8-20M V. 10M@300 25 MPa			300x740 SEE SETAIL 10M@200 35 MPa						300x600 8-20M V. 10M@300 25 MPa		300x600 8-20M V. 10M@300 25 MPa	
111750 SIZE VERT. REINF. TIES STRENGTH LEVEL 10	300x600 8-20M V. 10M@300 25 MPa		300x600 8-20M V. 10M@300 25 MPa			L-740x2500 SEE SETAIL 10M@200 35 MPa		400x400 8-20M V. 10M@300 25 MPa			400Ø 8-20M V. 10M@300 25 MPa	300x600 8-20M V. 10M@300 25 MPa	300x600 8-20M V. 10M@300 25 MPa		400Ø 8-20M V. 10M@300 25 MPa
108500 SIZE VERT. REINF. TIES STRENGTH LEVEL 9	300x600 8-20M V. 10M@300 25 MPa		300x600 8-20M V. 10M@300 25 MPa			L-740x1650 SEE SETAIL 10M@200 35 MPa					400x600 8-20M V. 10M@300 25 MPa	300x600 8-20M V. 10M@300 25 MPa	300x600 8-20M V. 10M@300 25 MPa		500Ø 8-20M V. 10M@300 25 MPa
105250 SIZE VERT. REINF. TIES STRENGTH LEVEL 8	300x600 8-20M V. 10M@300 25 MPa		300x600 8-25M V. 10M@300 35 MPa			L-740x1650 SEE SETAIL 10M@200 35 MPa					300x600 8-20M V. 10M@300 25 MPa	300x600 8-20M V. 10M@300 25 MPa	300x600 8-20M V. 10M@300 25 MPa		500Ø 8-20M V. 10M@300 25 MPa
102300 SIZE VERT. REINF. TIES STRENGTH LEVEL 7	300x600 8-20M V. 10M@300 25 MPa		300x600 8-25M V. 10M@300 35 MPa			L-740x1650 SEE SETAIL 10M@200 35 MPa					300x600 8-20M V. 10M@300 25 MPa	600X600 12-20M V. 10M@300 25 MPa	300x600 8-20M V. 10M@300 25 MPa		500Ø 8-20M V. 10M@300 25 MPa
99350 SIZE VERT. REINF. TIES STRENGTH LEVEL 6	300x600 8-25M V. 10M@300 35 MPa		300x600 8-25M V. 10M@300 35 MPa		450Ø 8-20M V. 10M@300 25 MPa	L-740x835 SEE SETAIL 10M@200 35 MPa	200x800 12-20M V. 10M@300 35 MPa			300x600 8-20M V. 10M@300 25 MPa	SEE DETAIL SEE DETAIL 10M@300 25 MPa	300x600 8-25M V. 10M@300 35 MPa	300x600 8-20M V. 10M@300 25 MPa		
96100 SIZE VERT. REINF. TIES STRENGTH LEVEL 5	300x600 8-25M V. 10M@300 35 MPa		300x600 8-25M V. 10M@300 35 MPa		450Ø 8-20M V. 10M@300 25 MPa	L-740x835 SEE SETAIL 10M@200 35 MPa	200x800 12-20M V. 10M@300 35 MPa			300x600 8-20M V. 10M@300 25 MPa	300x600 8-25M V. 10M@300 25 MPa	300x600 8-25M V. 10M@300 35 MPa	300x600 8-25M V. 10M@300 25 MPa		
93150 SIZE VERT. REINF. TIES STRENGTH LEVEL 4	300x600 8-25M V. 10M@300 35 MPa		300x600 12-30M V. 10M@300 35 MPa		450Ø 8-20M V. 10M@300 25 MPa	L-740x835 SEE SETAIL 10M@200 35 MPa	200x800 12-20M V. 10M@300 35 MPa			300x600 8-20M V. 10M@300 25 MPa	300x600 8-25M V. 10M@300 25 MPa	300x600 8-25M V. 10M@300 35 MPa	300x600 8-25M V. 10M@300 25 MPa		
90200 SIZE VERT. REINF. TIES STRENGTH LEVEL 3	300x600 8-25M V. 10M@300 35 MPa		300x600 12-30M V. 10M@300 35 MPa		450Ø 8-20M V. 10M@300 25 MPa	L-740x835 SEE SETAIL 10M@200 35 MPa	200x800 12-20M V. 10M@300 35 MPa			300x600 8-20M V. 10M@300 25 MPa	300x600 8-25M V. 10M@300 25 MPa	300x600 8-25M V. 10M@300 35 MPa	300x600 8-25M V. 10M@300 25 MPa		
87250 SIZE VERT. REINF. TIES STRENGTH LEVEL 2	300x600 8-25M V. 10M@300 35 MPa	400x700 14-30M V. 10M@300 50 MPa	300x600 12-30M V. 10M@300 35 MPa		450Ø 8-20M V. 10M@300 25 MPa	L-740x835 SEE SETAIL 10M@200 35 MPa	200x800 12-20M V. 10M@300 35 MPa			300x600 8-20M V. 10M@300 25 MPa	300x600 8-25M V. 10M@300 25 MPa	300x600 8-25M V. 10M@300 35 MPa	300x600 8-25M V. 10M@300 25 MPa		
84000 COLUMN LOAD(KN)	2400	5400	4100	400	900	4800	1600	1600	300	1100	2100	2600	2300	600	900
COLUMN NUMBER	TC16	TC17	TC18	TC19	TC20	TC21	TC23	TC75	TC24	TC25	TC26	TC27	TC30	TC31	TC32

LEVEL 14	TC34	TC35	TC33	TC36	TC37	TC38	TC39	TC41	TC42	TC43	TC45	TC44	TC46	TC47	TC48
124050 SIZE VERT. REINF. TIES STRENGTH LEVEL 13	300x600 8-20M V. 10M@300 25 MPa						300x600 8-20M V. 10M@300 25 MPa	300x600 8-20M V. 10M@300 25 MPa	300x600 8-20M V. 10M@300 25 MPa					300x600 8-25M V. 10M@300 25 MPa	
118950 SIZE VERT. REINF. TIES STRENGTH LEVEL 12			300x600 10-30M V. 10M@300 35 MPa		300x600 8-20M V. 10M@300 25 MPa		300x600 8-20M V. 10M@300 25 MPa	300x600 8-20M V. 10M@300 25 MPa	SEE DETAIL			525x600 10-20M V. 10M@300 25 MPa		300x600 8-25M V. 10M@300 25 MPa	300x600 8-20M V. 10M@300 25 MPa
115000 SIZE VERT. REINF. TIES STRENGTH LEVEL 11			300x600 10-30M V. 10M@300 35 MPa		300x600 8-20M V. 10M@300 25 MPa		300x600 8-20M V. 10M@300 25 MPa	300x600 8-20M V. 10M@300 25 MPa				525x600 10-20M V. 10M@300 25 MPa		300x600 8-25M V. 10M@300 25 MPa	300x600 8-20M V. 10M@300 25 MPa
111750 SIZE VERT. REINF. TIES STRENGTH LEVEL 10		300x600 8-20M V. 10M@300 25 MPa	300x600 10-30M V. 10M@300 35 MPa		300x600 8-20M V. 10M@300 25 MPa	300x600 6-20M V. 10M@300 25 MPa	300x600 8-20M V. 10M@300 25 MPa	300x600 8-20M V. 10M@300 25 MPa				450x600 10-20M V. 10M@300 25 MPa	300x600 8-20M V. 10M@300 25 MPa	300x600 8-25M V. 10M@300 25 MPa	300x600 8-20M V. 10M@300 25 MPa
108500 SIZE VERT. REINF. TIES STRENGTH LEVEL 9		300x600 8-20M V. 10M@300 25 MPa	300x600 10-30M V. 10M@300 35 MPa		300x600 8-20M V. 10M@300 25 MPa	300x600 6-20M V. 10M@300 25 MPa	300x600 8-20M V. 10M@300 25 MPa	300x600 8-20M V. 10M@300 25 MPa		300x600 8-20M V. 10M@300 25 MPa			300x600 8-20M V. 10M@300 25 MPa		
105250 SIZE VERT. REINF. TIES STRENGTH LEVEL 8		300x600 8-20M V. 10M@300 25 MPa	300x600 10-30M V. 10M@300 35 MPa		300x600 8-20M V. 10M@300 25 MPa	300x600 6-20M V. 10M@300 25 MPa	300x600 8-20M V. 10M@300 25 MPa	300x600 8-20M V. 10M@300 25 MPa		300x600 8-20M V. 10M@300 25 MPa			300x600 8-20M V. 10M@300 25 MPa		
102300 SIZE VERT. REINF. TIES STRENGTH LEVEL 7		300x600 8-20M V. 10M@300 25 MPa	300x600 10-30M V. 10M@300 35 MPa		300x600 8-20M V. 10M@300 25 MPa	300x600 6-20M V. 10M@300 25 MPa	300x600 8-20M V. 10M@300 25 MPa	300x600 8-25M V. 10M@300 35 MPa		300x600 8-20M V. 10M@300 25 MPa			300x600 8-20M V. 10M@300 25 MPa		
99350 SIZE VERT. REINF. TIES STRENGTH LEVEL 6		300x600 8-20M V. 10M@300 25 MPa	300x600 10-30M V. 10M@300 35 MPa	450Ø 12-20M V. 10M@300 25 MPa	300x600 8-25M V. 10M@300 35 MPa	300x600 6-20M V. 10M@300 25 MPa	300x600 10-25M V. 10M@300 35 MPa	300x600 8-25M V. 10M@300 35 MPa		300x600 8-20M V. 10M@300 25 MPa	300x600 8-20M V. 10M@300 25 MPa		300x600 8-20M V. 10M@300 25 MPa		
96100 SIZE VERT. REINF. TIES STRENGTH LEVEL 5		300x600 8-25M V. 10M@300 25 MPa	300x600 10-30M V. 10M@300 35 MPa	450Ø 12-20M V. 10M@300 25 MPa	300x600 8-25M V. 10M@300 35 MPa	300x600 8-20M V. 10M@300 25 MPa	300x600 10-25M V. 10M@300 35 MPa	300x600 8-25M V. 10M@300 35 MPa		300x600 8-25M V. 10M@300 25 MPa	300x600 8-20M V. 10M@300 25 MPa		300x600 10-25M V. 10M@300 35 MPa		
93150 SIZE VERT. REINF. TIES STRENGTH LEVEL 4		300x600 8-25M V. 10M@300 25 MPa	300x600 10-30M V. 10M@300 35 MPa	450Ø 12-20M V. 10M@300 25 MPa	300x600 8-25M V. 10M@300 35 MPa	300x600 8-20M V. 10M@300 25 MPa	300x600 10-25M V. 10M@300 35 MPa	300x600 8-25M V. 10M@300 35 MPa		300x600 8-25M V. 10M@300 25 MPa	300x600 8-20M V. 10M@300 25 MPa		300x600 10-25M V. 10M@300 35 MPa		
90200 SIZE VERT. REINF. TIES STRENGTH LEVEL 3		300x600 8-25M V. 10M@300 25 MPa	300x600 10-30M V. 10M@300 35 MPa	450Ø 12-20M V. 10M@300 25 MPa	300x600 8-25M V. 10M@300 35 MPa	300x600 8-20M V. 10M@300 25 MPa	300x600 10-25M V. 10M@300 35 MPa	300x600 8-25M V. 10M@300 35 MPa		300x600 8-25M V. 10M@300 25 MPa	300x600 8-20M V. 10M@300 25 MPa		300x600 10-25M V. 10M@300 35 MPa		
87250 SIZE VERT. REINF. TIES STRENGTH LEVEL 2		300x600 8-25M V. 10M@300 25 MPa	300x600 10-30M V. 10M@300 35 MPa	450Ø 12-20M V. 10M@300 25 MPa	300x600 8-25M V. 10M@300 35 MPa	300x600 8-20M V. 10M@300 25 MPa	300x600 10-25M V. 10M@300 35 MPa	300x600 8-25M V. 10M@300 35 MPa		300x600 8-25M V. 10M@300 25 MPa	300x600 8-20M V. 10M@300 25 MPa		300x600 10-25M V. 10M@300 35 MPa		
84000 COLUMN LOAD(KN)	300	1000	2100	1300	2400	1500	3200	2100	500	1600	1000	300	2000	400	900
COLUMN NUMBER	TC34	TC35	TC33	TC36	TC37	TC38	TC39	TC41	TC42	TC43	TC45	TC44	TC46	TC47	TC48

LEVEL 14	TC50	TC49	TC51	TC52	TC53	TC54	TC55	TC56	TC57	TC58	TC59	TC60	TC61	TC62	TC63
124050 SIZE VERT. REINF. TIES STRENGTH LEVEL 13		300x600 8-20M V. 10M@300 25 MPa	300x600 8-20M V. 10M@300 25 MPa	300x600 8-20M V. 10M@300 25 MPa	300x600 8-20M V. 10M@300 25 MPa	300x600 8-25M V. 10M@300 25 MPa	300x600 8-20M V. 10M@300 25 MPa	300x600 8-20M V. 10M@300 25 MPa	300x600 8-20M V. 10M@300 25 MPa	300x600 8-20M V. 10M@300 25 MPa					300x600 8-20M V. 10M@300 25 MPa
118950 SIZE VERT. REINF. TIES STRENGTH LEVEL 12	300x600 8-20M V. 10M@300 25 MPa	300x600 8-20M V. 10M@300 25 MPa	300x600 8-20M V. 10M@300 25 MPa	300x600 8-20M V. 10M@300 25 MPa	300x600 8-20M V. 10M@300 25 MPa	450Ø 10-25M V. 10M@300 25 MPa	450Ø 8-20M V. 10M@300 25 MPa	300x600 8-20M V. 10M@300 25 MPa	300x600 8-20M V. 10M@300 25 MPa	300x600 8-20M V. 10M@300 25 MPa	300x600 8-25M V. 10M@300 25 MPa	300x600 8-25M V. 10M@300 25 MPa	300x600 8-25M V. 10M@300 25 MPa	300x600 8-25M V. 10M@300 25 MPa	450Ø 8-20M V. 10M@300 25 MPa
115000 SIZE VERT. REINF. TIES STRENGTH LEVEL 11	300x600 8-20M V. 10M@300 25 MPa	300x600 8-20M V. 10M@300 25 MPa	300x600 8-20M V. 10M@300 25 MPa	300x600 8-20M V. 10M@300 25 MPa	300x600 8-20M V. 10M@300 25 MPa										
111750 SIZE VERT. REINF. TIES STRENGTH LEVEL 10	300x600 8-20M V. 10M@300 25 MPa	300x600 8-20M V. 10M@300 25 MPa	300x600 8-20M V. 10M@300 25 MPa	300x600 8-20M V. 10M@300 25 MPa	300x600 8-20M V. 10M@300 25 MPa										
108500 SIZE VERT. REINF. TIES STRENGTH LEVEL 9	300x600 8-20M V. 10M@300 25 MPa			300x600 8-20M V. 10M@300 25 MPa	300x600 8-20M V. 10M@300 25 MPa										
105250 SIZE VERT. REINF. TIES STRENGTH LEVEL 8	300x600 8-20M V. 10M@300 25 MPa			300x600 8-25M V. 10M@300 25 MPa	300x600 8-20M V. 10M@300 25 MPa										
102300 SIZE VERT. REINF. TIES STRENGTH LEVEL 7	300x600 8-20M V. 10M@300 25 MPa			300x600 8-25M V. 10M@300 25 MPa	300x600 8-20M V. 10M@300 25 MPa										
99350 SIZE VERT. REINF. TIES STRENGTH LEVEL 6	300x600 8-25M V. 10M@300 25 MPa			300x600 8-30M V. 10M@300 35 MPa	300x600 8-25M V. 10M@300 35 MPa										
96100 SIZE VERT. REINF. TIES STRENGTH LEVEL 5	300x600 8-25M V. 10M@300 25 MPa			300x600 8-30M V. 10M@300 35 MPa	300x600 8-25M V. 10M@300 35 MPa										
93150 SIZE VERT. REINF. TIES STRENGTH LEVEL 4	300x600 8-25M V. 10M@300 25 MPa			300x600 8-30M V. 10M@300 35 MPa	300x600 8-25M V. 10M@300 35 MPa										
90200 SIZE VERT. REINF. TIES STRENGTH LEVEL 3	300x600 8-25M V. 10M@300 25 MPa			300x600 8-30M V. 10M@300 35 MPa	300x600 8-25M V. 10M@300 35 MPa										
87250 SIZE VERT. REINF. TIES STRENGTH LEVEL 2	300x600 8-25M V. 10M@300 25 MPa			300x600 8-30M V. 10M@300 35 MPa	300x600 8-25M V. 10M@300 35 MPa										
84000 COLUMN LOAD(KN)	2050	500	400	2600	2800	700	400	200	200	700	500	200	700	500	800
COLUMN NUMBER	TC50	TC49	TC51	TC52	TC53	TC54	TC55	TC56	TC57	TC58	TC59	TC60	TC61	TC62	TC63

LEVEL 14	TC64	TC65	TC66	TC67	TC68	TC70	TC71	TC72	TC73	TC74	TC77	TC78	TC79
124050 SIZE VERT. REINF. TIES STRENGTH LEVEL 13			300x600 10-30M V. 10M@300 35 MPa	300x600 8-20M V. 10M@300 25 MPa		300x600 8-20M V. 10M@300 25 MPa						300x600 8-20M V. 10M@300 25 MPa	300x600 8-20M V. 10M@300 25 MPa
118950 SIZE VERT. REINF. TIES STRENGTH LEVEL 12	450Ø 8-20M V. 10M@300 25 MPa		300x600 10-30M V. 10M@300 35 MPa	300x600 8-20M V. 10M@300 25 MPa		450Ø 8-20M V. 10M@300 25 MPa							
115000 SIZE VERT. REINF. TIES STRENGTH LEVEL 11			300x600 10-30M V. 10M@300 35 MPa	300x600 8-20M V. 10M@300 25 MPa		300x600 8-20M V. 10M@300 25 MPa		250x550 6-20M V. 10M@250 25 MPa					
111750 SIZE VERT. REINF. TIES STRENGTH LEVEL 10			300x600 10-30M V. 10M@300 35 MPa	300x600 8-20M V. 10M@300 25 MPa				250x550 6-20M V. 10M@250 25 MPa	300x600 8-20M V. 10M@300 25 MPa	300x600 8-20M V. 10M@300 25 MPa	200x400 6-15M V. 10M@200 40 MPa		
108500 SIZE VERT. REINF. TIES STRENGTH LEVEL 9			300x600 10-30M V. 10M@300 35 MPa	300x600 8-20M V. 10M@300 25 MPa					300x600 8-20M V. 10M@300 25 MPa	300x600 8-20M V. 10M@300 25 MPa	200x400 6-15M V. 10M@200 25 MPa		
105250 SIZE VERT. REINF. TIES STRENGTH LEVEL 8			300x600 10-30M V. 10M@300 35 MPa	300x600 8-20M V. 10M@300 25 MPa					300x600 8-20M V. 10M@300 25 MPa	300x600 8-20M V. 10M@300 25 MPa	200x400 6-15M V. 10M@200 25 MPa		
102300 SIZE VERT. REINF. TIES STRENGTH LEVEL 7			300x600 10-30M V. 10M@300 35 MPa	300x600 8-20M V. 10M@300 25 MPa					300x600 8-20M V. 10M@300 25 MPa	300x600 8-20M V. 10M@300 25 MPa	200x400 6-15M V. 10M@200 25 MPa		
99350 SIZE VERT. REINF. TIES STRENGTH LEVEL 6			300x600 12-30M V. 10M@300 35 MPa	300x600 8-25M V. 10M@300 35 MPa	200x900 10-20M V. 10M@300 25 MPa		300x600 8-25M V. 10M@300 25 MPa		300x600 8-20M V. 10M@300 25 MPa	300x600 8-20M V. 10M@300 25 MPa			
96100 SIZE VERT. REINF. TIES STRENGTH LEVEL 5			300x600 12-30M V. 10M@300 35 MPa	300x600 8-25M V. 10M@300 35 MPa	200x900 10-20M V. 10M@300 25 MPa		300x600 8-25M V. 10M@300 25 MPa		300x600 8-25M V. 10M@300 25 MPa	300x600 8-25M V. 10M@300 25 MPa			
93150 SIZE VERT. REINF. TIES STRENGTH LEVEL 4			300x600 12-30M V. 10M@300 35 MPa	300x600 8-25M V. 10M@300 35 MPa	200x900 10-20M V. 10M@300 25 MPa		300x600 8-25M V. 10M@300 25 MPa		300x600 8-25M V. 10M@300 25 MPa	300x600 8-25M V. 10M@300 25 MPa			
90200 SIZE VERT. REINF. TIES STRENGTH LEVEL 3			300x600 12-30M V. 10M@300 35 MPa	300x600 8-25M V. 10M@300 35 MPa	200x900 10-20M V. 10M@300 25 MPa		300x600 8-25M V. 10M@300 25 MPa		300x600 8-25M V. 10M@300 25 MPa	300x600 8-25M V. 10M@300 25 MPa			
87250 SIZE VERT. REINF. TIES STRENGTH LEVEL 2		500x700 14-30M V. 10M@300 50MPa	300x600 12-30M V. 10M@300 35 MPa	300x600 8-25M V. 10M@300 35 MPa	200x900 10-20M V. 10M@300 25 MPa		300x600 8-25M V. 10M@300 25 MPa		300x600 8-25M V. 10M@300 25 MPa	300x600 8-25M V. 10M@300 25 MPa			
84000 COLUMN LOAD(KN)	200	5100	4400	2600	1000	1500	2300	300	2200	1800			
COLUMN NUMBER	TC64	TC65	TC66	TC67	TC68	TC70	TC71	TC72	TC73	TC74	TC77		

SEE COLUMN SCHEDULE NOTES ON S2-01

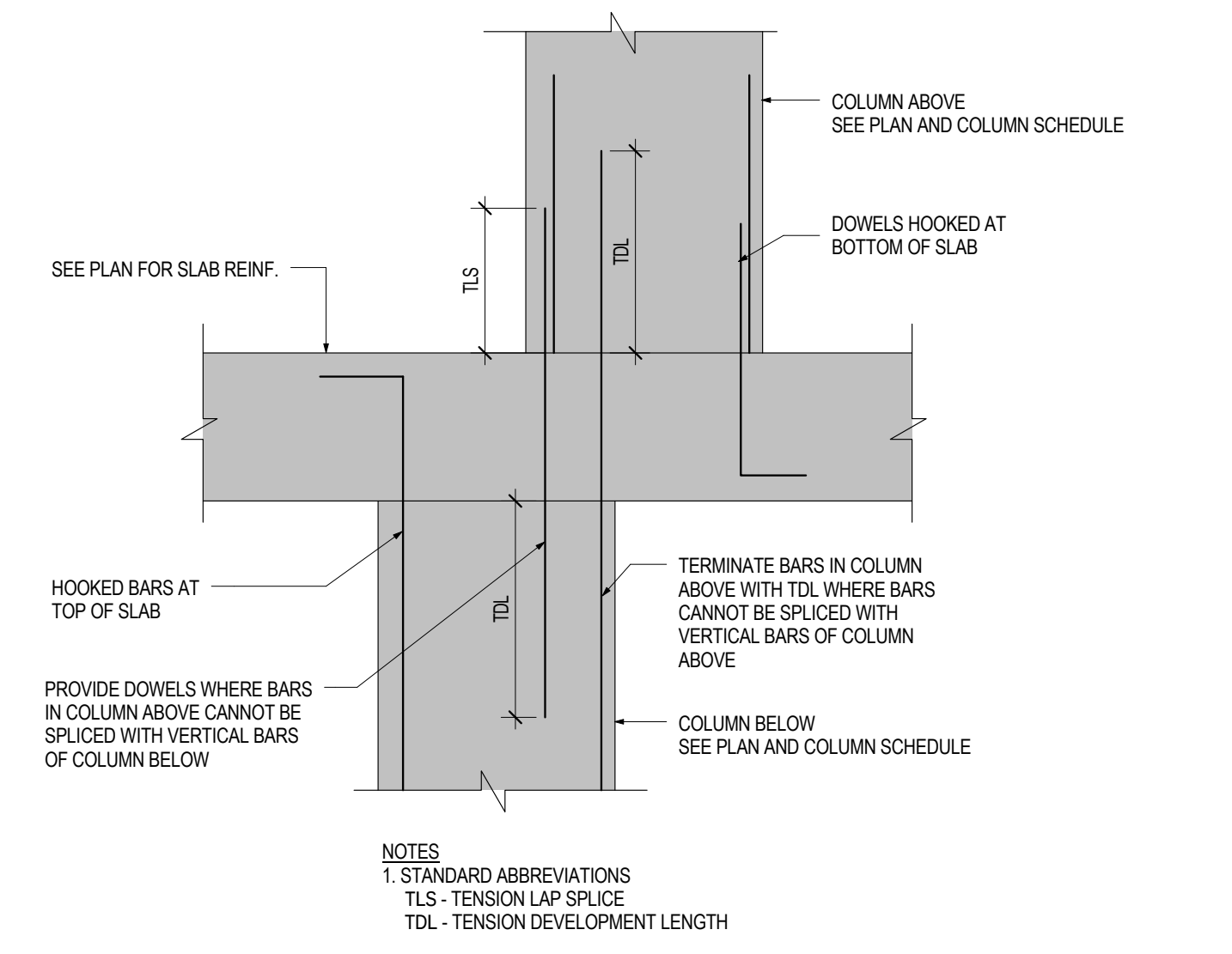
COLUMN ABOVE
SEE PLAN AND COLUMN SCHEDULE
DOWELS HOOKED AT BOTTOM OF SLAB
SEE PLAN FOR SLAB REINF.
TLS
TDL
HOOKED BARS AT TOP OF SLAB
PROVIDE DOWELS WHERE BARS IN COLUMN ABOVE CANNOT BE SPLICED WITH VERTICAL BARS OF COLUMN BELOW
TERMINATE BARS IN COLUMN ABOVE WITH TDL WHERE BARS CANNOT BE SPLICED WITH VERTICAL BARS OF COLUMN ABOVE
COLUMN BELOW
SEE PLAN AND COLUMN SCHEDULE

NOTES
1. STANDARD ABBREVIATIONS
TLS - TENSION LAP SPLICE
TDL - TENSION DEVELOPMENT LENGTH

TYPICAL DETAIL FOR COLUMNS NOT LINED UP WITH COLUMNS BELOW
1 : 10

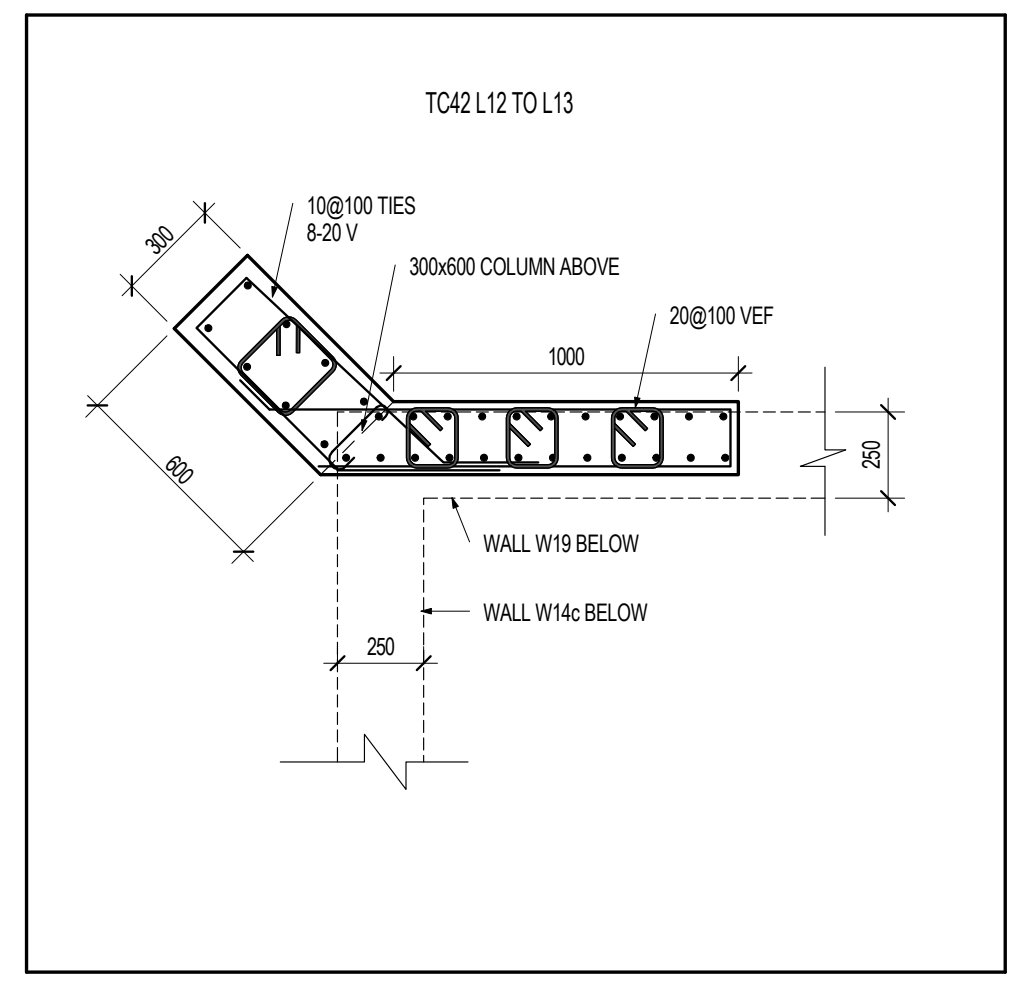

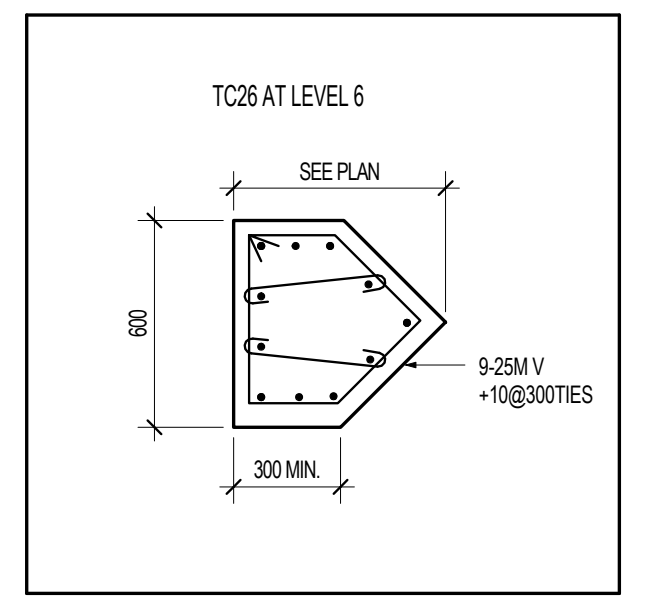

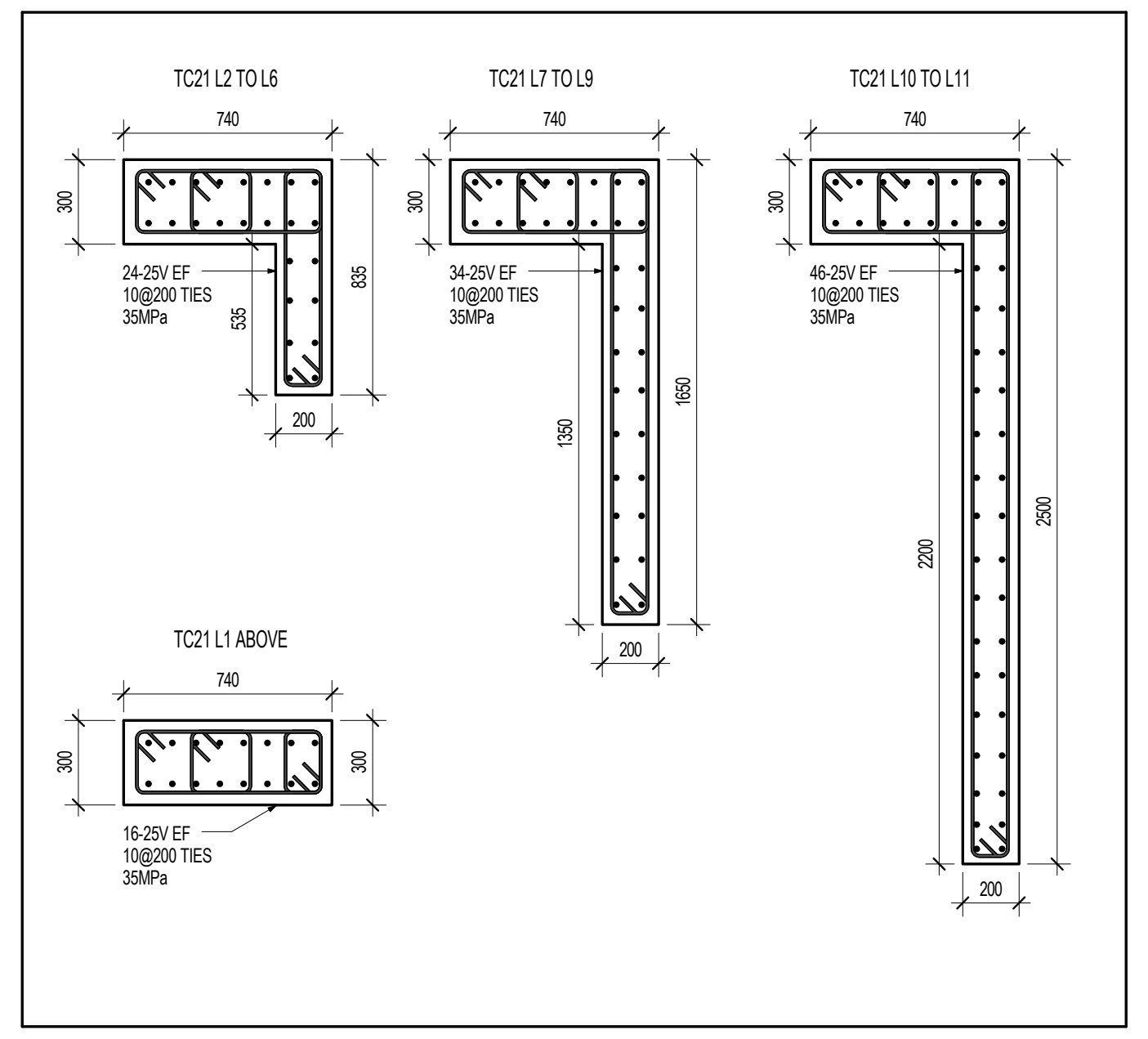

Contractor Must Check And Verify All Dimensions On The Job.

Do Not Scale The Drawings.

All Drawings, Specifications And Related Documents Are The Copyright Of The Architect And Must Be Returned Upon Request.

Reproduction Of Drawings, Specifications And Related Documents In Part Or Whole Is Forbidden Without The Architects Written Permission.

This Drawing Is Not To Be Used For Construction Until Signed ByThe Architect.

Date:

DEC.18,2015 DEC.18,2015

stephenson
ENGINEERING

2550 Victoria Park Ave. Suite 602
Toronto ON M2J 5A9 | Tel: (416) 635 9970
www.stephenson-eng.com | info@stephenson-eng.com

No	Revision	Date

No	Issued For	Date
7	ISSUED FOR STEEL TENDER	DEC.18,2015
4	BUILDING PERMIT RESUBMISSION	SEPT.21,2015
3	BUILDING PERMIT RESUBMISSION	JULY 22,2015
2	BUILDING PERMIT SUBMISSION	JUNE 12,2015
1	ISSUED FOR WT REVIEW	MAY 01,2015

AQUAVISTA
AT BAYSIDE TORONTO

Drawing Title
COLUMN SCHEDULE - LEVEL 2 ABOVE AND CONNECTION PLATE SCHEDULE

Project
Hines TRIDEL
AQUAVISTA
Block 3 - R3 & R4
Merchant's Whart
Toronto, ON

Scale
As indicated

Drawn by
DC

Checked by
IA/BBS

Project No.
20140031

Date
DEC.18,2015

Drawing No.
S2-02

Plot Date: 3/9/2016 10:01:35 AM

LEVEL 1 BEAM SCHEDULE

BEAM NUMBER	SIZE	BOTTOM BARS			TOP BARS			STIRRUPS			REMARKS
		No.	SIZE		No.	SIZE		SIZE	TYPE		
BMG01	2000X1290/1500	12	35	BLL	6	30	TUL	15	☐	10@150 RE	TRIPLES
		10	15	5HEF	5	35	TUL 2000	15	☐	@300 REM	DOUBLES
					5	35	2000 TUL				
BMG02	2000X1500	22	35	BLL	9	30	2600 TUL	15	☐	@125	FIVE SETS
		22	35	BUL	6	35	1400 TUL				
		10	15	5HEF	12	30	TUL 3600 4900				
					8	35	TUL 2000 2000				
					6	30	TLL 2000 2000				
BMG03	2000X1500	12	35	BLL	12	30	FROM BMG02 TUL	15	☐	5@125 RE	TRIPLES
		12	35	BUL	8	35	FROM BMG02 TUL	15	☐	6@200 LE	TRIPLES
		10	15	5HEF	6	30	FROM BMG02 TLL	15	☐	@300 REM	DOUBLES
					8	30	TUL 3600				
					9	35	TUL 2000				
BMG04	2000X1500	22	35	BLL	6	35	2600 TUL	15	☐	@100	FIVE SETS
		12	35	BUL	7	35	1400 TUL				
		12	15	6HEF	12	35	TUL 3400 4300				
					5	35	TUL 2000 2000				
					5	35	TLL 2000 2000				
BMG05	2000X1850	14	35	BLL	12	35	FROM BMG04 TUL	15	☐	10@100 RE	FIVE SETS
		14	35	BUL	5	35	FROM BMG04 TUL	15	☐	@200 REM	FIVE SETS
		16	15	8HEF	5	35	FROM BMG04 TLL				
					5	35	TUL 5000				
					5	35	TLL 2700				
BMG06	2000X800	6	35	BLL	6	35	TUL	15	☐	@125	FOUR SETS
		12	30	BLL	3	30	TUL				
		16	35	BUL							
		4	15	2HEF							
BMG07	2000X1500	7	30	BLL	6	30	3700 TUL	10	☐	@300	TRIPLES
		12	15	6HEF	8	30	TUL 5300 4000				
					7	30	TLL 2100 2100				
BMG08	2000X1500	16	30	BLL	8	30	FROM BMG07 TUL	10	☐	5@125 LE	TRIPLES
		12	15	6HEF	7	30	FROM BMG07 TLL	10	☐	@300 REM	TRIPLES
					17	35	TUL 4000 4300				
					17	35	TLL 2000 2000				
BMG09	2000X1500	19	35	BLL	17	35	FROM BMG08 TUL	15	☐	@100	FIVE SETS
		14	35	BUL	17	35	FROM BMG08 TLL				
		12	15	6HEF	11	35	TUL 4300 3100				
					8	35	TLL 2000 2000				
BMG10	2000X1100	15	35	BLL	11	35	FROM BMG09 TUL	10	☐	@300	TRIPLES
		8	15	4HEF	8	35	FROM BMG09 TLL				
					6	35	TUL 3100 3100				
					5	35	TLL 1400 1400				
BMG11	2000X1100	6	25	BLL	6	35	FROM BMG10 TUL	10	☐	@300	TRIPLES
		8	15	4HEF	5	35	FROM BMG10 TLL				
					7	35	TUL 3100 4300				
					7	30	TLL 2000 2000				
BMG12	2000X1100	10	30	BLL	7	35	FROM BMG11 TUL	10	☐	8@200 RE	TRIPLES
		10	30	BUL	7	30	FROM BMG11 TLL	10	☐	10@150 LE	TRIPLES
		8	15	4HEF	8	35	TUL 4300 3700	10	☐	@300 REM	TRIPLES
					7	30	TLL 2000 2000				
BMG13	2000X1100	10	30	BLL	8	35	FROM BMG12 TUL	10	☐	@300	TRIPLES
		10	30	BUL	7	30	FROM BMG12 TLL				
		8	15	4HEF	9	35	TUL 2600				
BMG14	2000X1500	18	35	BLL	6	35	2600 TUL	15	☐	5@100 RE	FIVE SETS
		14	35	BUL	5	35	1400 TUL	15	☐	@200 REM	TRIPLES
		10	15	5HEF	15	35	TUL 3400 4900				
					9	35	TLL 2000 2000				
BMG15	2000X1500	16	35	BLL	15	35	FROM BMG14 TUL	15	☐	10@150 RE	FIVE SETS
		12	35	BUL	9	35	FROM BMG14 TLL	15	☐	@300 REM	TRIPLES
		12	15	6HEF	12	35	TUL 3600				
					8	35	TLL 2000				
BMG16	2000X1500	15	35	BLL	12	30	4100 TUL	15	☐	@150	FOUR SETS
		11	30	BUL	10	25	2000 TUL				
		12	15	6HEF	15	35	TUL 4100 4400				
					12	35	TLL 2100 2100				

LEVEL 1 BEAM SCHEDULE

BEAM NUMBER	SIZE	BOTTOM BARS			TOP BARS			STIRRUPS			REMARKS
		No.	SIZE		No.	SIZE		SIZE	TYPE		
BMG17	2000X1500	15	35	BLL	15	35	FROM BMG16 TUL	15	☐	50@100 LE	FOUR SETS
		11	30	BUL	12	35	FROM BMG16 TLL	15	☐	@150 REM	TRIPLES
		12	15	6HEF	15	35	TUL 4400 3100				
					12	35	TLL 2100 2100				
BMG18	2000X1100	13	30	BLL	15	35	FROM BMG17 TUL	10	☐	@200	DOUBLES
		8	15	4HEF	12	35	FROM BMG17 TLL				
					8	30	TUL 3000 3100				
					7	30	TLL 1400 1400				
BMG19	2000X1100	10	30	BLL	8	30	FROM BMG18 TUL	10	☐	@200	DOUBLES
		8	15	4HEF	7	30	FROM BMG18 TLL				
					9	35	TUL 3100 4300				
					8	30	TLL 1400 1400				
BMG20	2000X1100	10	35	BLL	9	35	FROM BMG19 TUL	10	☐	25@150 LE	TRIPLES
		10	30	BUL	8	30	FROM BMG19 TLL	10	☐	@200 REM	TRIPLES
		8	15	4HEF	10	35	TUL FROM BMG21				
					6	30	TLL FROM BMG21				
BMG21	2000X1100	6	25	BLL	10	35	4200 TUL 6850	10	☐	@200	DOUBLES
		8	15	4HEF	6	30	2000 TLL 2800				
BMG22	2000X1500	18	35	BLL	10	35	FROM BMG21 TUL	15	☐	28@125 RE	TRIPLES
		10	30	BUL	6	30	FROM BMG21 TLL	15	☐	20@125 LE	TRIPLES
		8	15	4HEF	10	35	TUL 4800	15	☐	@200 REM	TRIPLES
					4	30	TLL 2700				
BMG23	2000X1970/1500	20	35	BLL	7	35	4400 TUL	15	☐	20@125 RE	DOUBLES
		17	35	BUL	5	30	2500 TLL	15	☐	8@200 LE	DOUBLES
		10	15	5HEF	12	35	TUL 6400 5000	15	☐	@300 REM	DOUBLES
					4	30	TLL 2800 2800				
~~BMG24~~	~~2000X900~~	~~9~~	~~25~~	~~BLL~~	~~12~~	~~35~~	~~FROM BMG23~~	~~15~~	☐	~~5@200 RE~~	~~DOUBLES~~
		~~6~~	~~15~~	~~3HEF~~			DELETED	~~15~~	☐	~~5@200 LE~~	~~DOUBLES~~
								~~15~~	☐	~~@300 REM~~	~~DOUBLES~~
BMG25	2000X1500	12	35	BLL	9	30	5000 TUL	10	☐	15@200 RE	TRIPLES
		12	15	6HEF	12	35	TUL 4800 7250	10	☐	10@200 LE	TRIPLES
					10	30	TLL 3000 3000	10	☐	@300 REM	TRIPLES
BMG26	2000X1500	14	35	BLL	12	35	FROM BMG25 TUL	10	☐	30@150 RE	TRIPLES
		10	30	BUL	10	30	FROM BMG25 TLL	10	☐	7@200 LE	TRIPLES
		10	15	5HEF	12	35	TUL 4800 4800	10	☐	@300 REM	TRIPLES
					10	30	TLL 2300 2300				
BMG27	2000X1100	13	35	BLL	12	35	FROM BMG26 TUL	10	☐	7@200 RE	TRIPLES
		8	15	4HEF	10	30	FROM BMG26 TLL	10	☐	7@200 LE	TRIPLES
					8	35	TUL 4800 4800	10	☐	@300 REM	TRIPLES
					8	30	TLL 2300 2300				
BMG28	2000X1100	15	35	BLL	8	35	FROM BMG27 TUL	10	☐	40@100 RE	TRIPLES
		8	15	4HEF	8	30	FROM BMG27 TLL	10	☐	7@200 LE	TRIPLES
					8	35	TUL 4800	10	☐	@300 REM	TRIPLES
					8	30	TLL 2300				
BMG29	400X950	5	20	BLL	3	25	5600 TUL	10	☐	@300	
		8	15	4HEF	2	15	2300 TUL				
					2	15	2300 TLL				
					3	25	TUL 5100 6900				
					2	25	TUL 2300 5500				
					5	25	TLL 2300 5500				
BMG29A	400X950	3	20	BLL	3	25	FROM BMG29 TUL	10	☐	@300	
		8	15	4HEF	2	25	FROM BMG29 TUL				
					5	25	FROM BMG29 TLL				
BMG30	400X950	3	20	BLL	3	25	FROM BMG29	10	☐	@300	
		2	25	BLL	2	25	FROM BMG29				
		2	25	BUL	5	25	FROM BMG29				
		8	15	4HEF	3	25	6800 TUL				
					3	25	TUL 4300 6100				
					2	25	TUL 3300 3900				
					5	25	TLL 3300 3900				
BMG30A	400X950	3	20		3	25	FROM BMG30 TUL	10	☐	@300	
		8	15	4HEF	2	25	FROM BMG30 TUL				
					5	25	FROM BMG30 TLL				

LEVEL 1 BEAM SCHEDULE

BEAM NUMBER	SIZE	BOTTOM BARS			TOP BARS			STIRRUPS			REMARKS
		No.	SIZE		No.	SIZE		SIZE	TYPE		
BMG31	400X950	3	20	BLL	3	25	FROM BMG30	10	☐	@300	
		2	25	BUL	2	25	FROM BMG30				
		8	15	4HEF	5	25	FROM BMG30				
					3	25	TUL 5200 7000				
					2	25	TUL 2700 5900				
					5	25	TLL 2700 5900				
BMG31A	400X950	3	20		3	25	FROM BMG31 TUL	10	☐	@300	
		8	15	4HEF	2	25	FROM BMG31 TUL				
					5	25	FROM BMG31 TLL				
BMG32	400X950	5	20	BLL	3	25	FROM BMG31	10	☐	@300	
		2	15	BUL	2	25	FROM BMG31				
		8	15	4HEF	5	25	FROM BMG31				
					3	25	TUL 8100				
					2	20	TUL 2500				
					2	20	TLL 2500				

LEVEL 2 BEAM SCHEDULE

BEAM NUMBER	SIZE	BOTTOM BARS			TOP BARS			STIRRUPS			REMARKS
		No.	SIZE		No.	SIZE		SIZE	TYPE		
BM201	700X600	6	45	BLL	6	25	5500 TUL	10	☐	@125	IN TRIPLES
					6	45	TUL 3400 3100				
					6	45	TML 1350 1350				
					2	45	TLL 1350 1350				
BM202	1100X600	8	35	BLL	6	45	FROM BM201	15	☐	@100	IN TRIPLES
		8	30	BUL	6	45	FROM BM201				
					2	45	FROM BM201				
					5	45	TUL 3300 2850				
					3	45	TUL 1600 1600				
					8	45	TLL 1600 1600				
BM203	1100X600	8	30	BLL	5	45	FROM BM202	10	☐	@150	IN DOUBLES
					3	45	FROM BM202				
					8	45	FROM BM202				
					5	45	TUL 2800 4200				
					3	45	TUL 1900 1900				
					8	45	TLL 1900 1900				
BM204	1100X600	8	35	BLL	5	45	FROM BM203	15	☐	@100	IN TRIPLES
		8	30	BUL	3	45	FROM BM203				
					8	45	FROM BM203				
					5	45	TUL 4400 5400				
					3	45	TUL 2250 2250				
					8	45	TLL 2250 2250				
BM205	1600X600	5	35	BLL	5	45	FROM BM204	15	☐	@100	IN TRIPLES
		5	30	BLL	3	45	FROM BM204				
		8	30	BUL	8	45	FROM BM204				
					4	35	TUL 3600				
					6	35	TLL 2250				
BM206	1600x600	7	35	BLL	7	30	7800 TUL	15	☐	15@75RE	IN FOUR SETS
		10	30	BLL	6	35	2300 TUL	15	☐	@300REM	IN DOUBLES
		8	30	BUL	16	30	TUL 3600				
					16	35	TLL 2200				
BM207	700X600	7	30	BLL	7	25	1500 TUL 1500	15	☐	10@75LE	IN TRIPLES
		4	30	BUL	7	30	TLL	15	☐	@100REM	IN TRIPLES
BM208	800X600	2	25	BLL	3	25	3100 TUL	10	☐	@100	IN DOUBLES
		2	20	BLL	5	30	TUL 2900 3500				
					2	35	TUL 1700 1700				
					4	30	TLL 1700 1700				
BM209	800X600	8	35	BLL	5	30	FROM BM208	15	☐	@150	IN TRIPLES
		8	35	BUL	2	35	FROM BM208				
					4	30	FROM BM208				
					4	35	TUL 4500				
					2	25	TLL 3350				
BM210	1200X600	6	35	BLL	4	35	3000 TUL	10	☐	@100	IN TRIPLES
		4	30	BLL	2	35	2300 TUL				
					6	30	TUL 3900 2200				
					4	35	TUL 2300 1000				
					4	30	TLL 2300 1000				
BM211	1200X600	7	30	BLL	6	30	FROM BM210	10	☐	@150	IN TRIPLES
					4	35	FROM BM210				
					4	30	FROM BM210				
					5	30	1900				
					2	30	1000				
BM212	1000X600	9	45	BLL	9	45	1000 TUL 1000	15	☐	@150	IN FOUR SETS
		9	45	BUL	5	20	1000 2550 TLL 2550 1000				
					5	35	1900 TLL 1900				
BM213	1000X600	9	45	BLL	9	45	2000 TUL	15	☐	@100	IN FOUR SETS
		6	35	BUL	9	45	2000 2000 TLL				
BM214/BM216	1600X1500/600	10	30	BLL	6	30	4000 TUL	10	☐	15@140RE	IN DOUBLES
					4	30	2300 TUL	10	☐	15@140LE	IN TRIPLES
					8	30	TUL 5600 5600	10	☐	@140REM	
					5	35	TUL 2300 2300				
					4	30	TLL 2300 2300				
BM215/BM217	1600X1500/600	10	30	BLL	8	30	FROM BM214/BM216	10	☐	15@140LE	IN TRIPLES
					5	35	FROM BM214/BM216	10	☐	15@140RE	IN DOUBLES
					4	30	FROM BM214/BM216	10	☐	@140REM	
					6	30	TUL 4000				
					4	30	TUL 2300				
BM218	520X1500	6	30	BLL	3	30	7000 TUL	15	☐	10@150 RE	IN DOUBLES
		6	30	BUL	2	30	2500 TUL	15	☐	14@225 LE	
		10	15	5HEF	4	25	2500 TLL	15	☐	@300 REM	
					3	30	TUL 5500 6500				
					3	30	TUL 2500 3500				
					6	30	TLL 2500 3500				
BM218a	520X1500	6	30		3	30	FROM BM218	10	☐	@200	
		10	15	5HEF	3	30	FROM BM218				
					6	30	FROM BM218				

LEVEL 2 BEAM SCHEDULE

BEAM NUMBER	SIZE	BOTTOM BARS			TOP BARS			STIRRUPS			REMARKS
		No.	SIZE		No.	SIZE		SIZE	TYPE		
BM219	520X1500	6	30	BLL	3	30	FROM BM218	15	☐	@300	
		6	25	BUL	3	30	FROM BM218				
		10	15	5 HEF	6	30	FROM BM218				
					3	30	TUL 4500				
					2	30	TUL 2300				
					3	25	TLL 2300				
BM220/BM224	600X1200	3	25	BLL	2	15	5000 TUL	10	☐	@300	
		2	30	BLL	2	30	TUL 5200 4000				
		8	15	4HEF	2	30	TUL 2350 2350				
					2	15	TLL 2350 2350				
BM221/BM225	600X1200	3	25	BLL	2	30	FROM BM220/BM224	10	☐	@300	
		8	15	4HEF	2	30	FROM BM220/BM224				
					2	15	FROM BM220/BM224				
					2	15	TUL 4000				
BM222	1500X550	5	30	BLL	7	30	3400	10	☐	15@125LE	IN DOUBLES
		6	35	BLL	2	30	1900	10	☐	30@75RE	IN DOUBLES
					7	30	TUL 4600 3500	10	☐	@275REM	IN DOUBLES
					4	35	TUL 1900 1900				
					3	35	TLL 1900 1900				
BM223	1500X550	7	30	BLL	7	30	FROM BM222	10	☐	11@75LE	
					4	35	FROM BM222	10	☐	@150REM	
					3	35	FROM BM222				
					4	30	TUL 2700				
					2	30	TUL 1500				
BM226	700X1500	5	30	CONT. BLL	3	20	CONT. TUL	10	☐	@300	
		12	15	6 HEF							

Contractor Must Check And Verify All Dimensions On The Job.

Do Not Scale The Drawings.

All Drawings, Specifications And Related Documents Are The Copyright Of The Architect And Must Be Returned Upon Request.

Reproduction Of Drawings, Specifications And Related Documents In Part Or Whole Is Forbidden Without The Architects Written Permission.

This Drawing Is Not To Be Used For Construction Until Signed ByThe Architect.

Date:

DEC.18,2015 DEC.18,2015

stephenson
ENGINEERING

2550 Victoria Park Ave. Suite 602
Toronto ON M2J 5A9 | Tel: (416) 635 9970
www.stephenson-eng.com | info@stephenson-eng.com

No	Revision	Date

No	Issued For	Date
7	ISSUED FOR STEEL TENDER	DEC.18,2015

AQUAVISTA
AT BAYSIDE TORONTO

Drawing Title
BEAM SCHEDULES

Project
Hines TRIDEL®
AQUAVISTA
Block 3 - R3 & R4
Merchant's Whart
Toronto, ON

Scale: 1 : 1
Drawn by: DC
Checked by: BK/BBS
Project No.: 20140031
Date: DEC.18,2015
Drawing No.: S2-03

Plot Date: 3/9/2016 10:01:39 AM

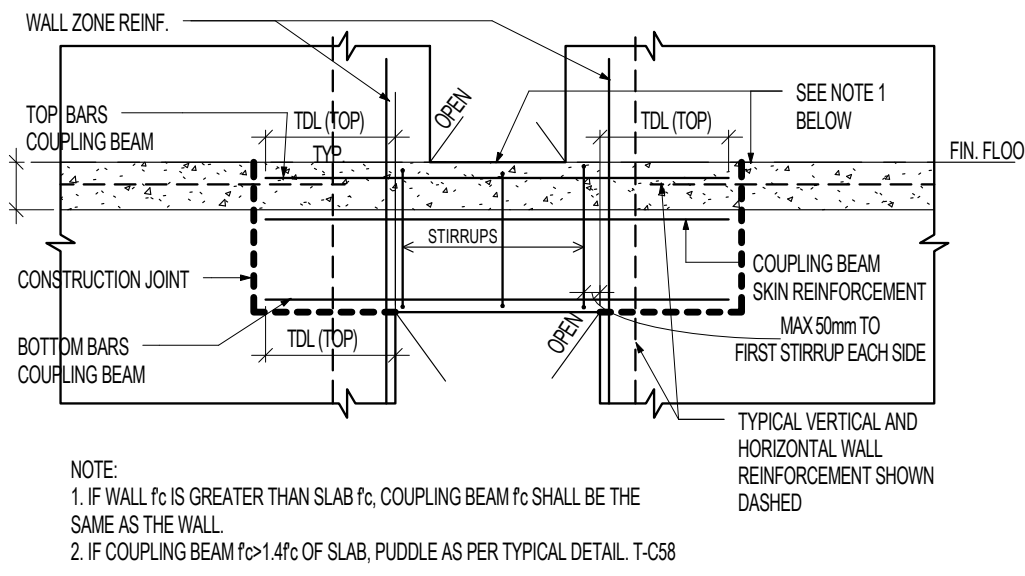
WALL ZONE REINF.
TOP BARS COUPLING BEAM
TDL (TOP)
TYP.
SEE NOTE 1 BELOW
FIN. FLOOR
SLAB DEPTH
STIRRUPS
CONSTRUCTION JOINT
COUPLING BEAM SKIN REINFORCEMENT
MAX 50mm TO FIRST STIRRUP EACH SIDE
BOTTOM BARS COUPLING BEAM
OPEN
TYPICAL VERTICAL AND HORIZONTAL WALL REINFORCEMENT SHOWN DASHED

NOTE:
1. IF WALL f'c IS GREATER THAN SLAB f'c, COUPLING BEAM f'c SHALL BE THE SAME AS THE WALL.
2. IF COUPLING BEAM f'c>1.4f'c OF SLAB, PUDDLE AS PER TYPICAL DETAIL. T-C58

1 TYPICAL COUPLING BEAM REINFORCEMENT DETAIL

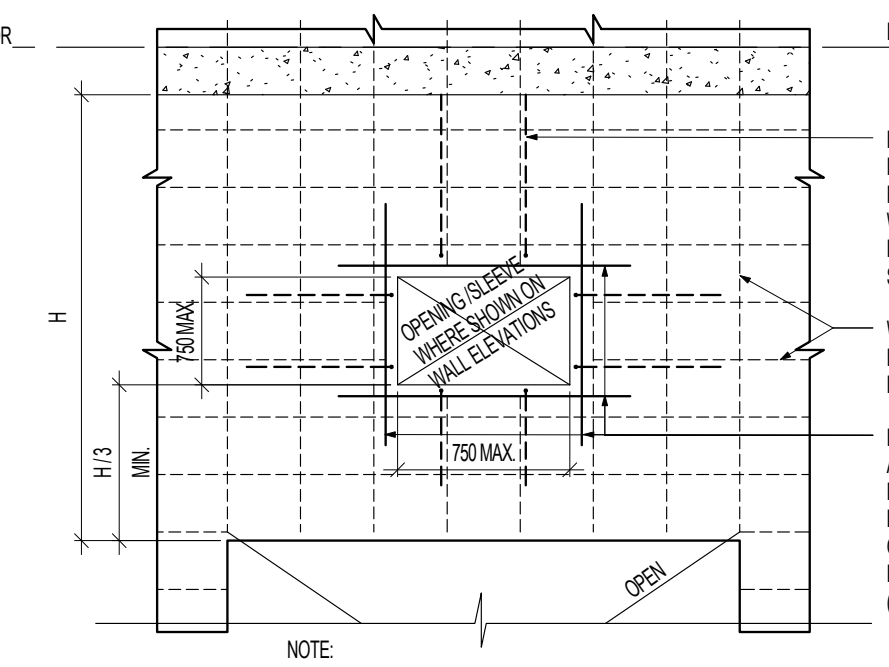
FIN. FLOOR
H
H / 3
MIN.
750 MAX.
OPENING /SLEEVE WHERE SHOWN ON WALL ELEVATIONS
OPEN
HOOK HORIZONTAL & VERTICAL TYPICAL REINFORCEMENT OR ALTERNATIVELY PROVIDE U-BARS CORRESPONDING TO WALL HORIZONTAL AND VERTICAL REINFORCEMENT. PROVIDE TENSION LAP SPLICE (TOP).
WALL VERTICAL /HORIZONTAL REINFORCEMENT SHOWN DASHED
PROVIDE BARS EQUIVALENT IN AREA TO WALL VERTICAL/HORIZONTAL REINFORCEMENT INTERRUPTED BY OPENING (HALF EACH SIDE OF OPENING BUT MIN 2-15 EACH SIDE). EXTEND BARS 2xTDL (TOP) BEYOND OPENING EDGE.

NOTE:
1. FOR LARGER OPENINGS SEE REINFORCEMENT ON WALL ELEVATIONS

2 TYPICAL ADDITIONAL REINFORCEMENT FOR WALL OPENINGS UP TO 750mmX750mm SIZE

SHEAR WALL NOTES:

1. SHEAR WALL ELEVATIONS SERVE THE PURPOSE OF DEFINING THE ZONE, DISTRIBUTED AND COUPLING BEAM REINFORCEMENT, ALONG WITH THE SIZE OF THE SHEAR WALLS, COUPLING BEAMS AND CONCRETE STRENGTH. SHEAR WALL ELEVATIONS SHOULD BE READ IN CONJUNCTION WITH SCHEDULES AND TYPICAL SHEAR WALL DETAILS. THE GRAVITY ELEMENTS (COLUMNS, SLABS, BEAMS, FOUNDATION SYSTEM, ETC.) ARE SHOWN CONCEPTUALLY FOR CLARIFICATION ONLY. FOR SIZE, GEOMETRY, STEPS, ETC. OF THE GRAVITY ELEMENTS REFER TO THE APPROPRIATE PLANS, DETAILS AND SCHEDULES.
2. CONCRETE STRENGTHS TO BE AS NOTED IN WALL ELEVATIONS.
3. FOR ALL GARAGE SLABS, WALLS, AND COLUMNS, CONCRETE SHALL CONFORM TO THE LATEST EDITION OF CAN/CSA S413 AND MEET THE REQUIREMENTS FOR EXPOSURE CLASSIFICATION C-1 AS DEFINED IN TABLE 14 OF CSA STANDARD CAN/CSA-A23.1 LATEST EDITION. REFER TO THE SPECIFICATIONS.
4. PROVIDE WALL REINFORCEMENT IN ACCORDANCE WITH THE VALUES INDICATED ON THE WALL ELEVATIONS OR PLANS. WHERE 'NWR' IS INDICATED PROVIDE THE NOMINAL WALL REINFORCEMENT, AS SHOWN IN TABLE 1.

TABLE 1: NOMINAL WALL REINFORCEMENT (NWR)

WALL THICKNESS (mm)	NOMINAL WALL REINFORCEMENT	
	HORIZONTAL	VERTICAL
150	10@320H (CENTERED)	10@440V (CENTERED)
200	10@460 HEF	10@460 VEF
250	10@400 HEF	10@460 VEF
300	10@320 HEF	10@440 VEF
350	10@280 HEF	10@380 VEF
400	10@240 HEF	10@320 VEF

WALL THICKNESS (mm)	NOMINAL WALL REINFORCEMENT	
	HORIZONTAL	VERTICAL
450	15@440 HEF	10@280 VEF
500	15@400 HEF	15@460 VEF
600	15@320 HEF	15@440 VEF

5. WALL REINFORCEMENT IS VERTICAL AND HORIZONTAL EACH FACE (H&VEF) UNLESS NOTED OTHERWISE.
6. PROVIDE TIES FOR DISTRIBUTED VERTICAL REINFORCEMENT IF THE BAR SIZE IS LARGER THAN 20M OR IF BAR SPACING IS LESS THAN THAT OUTLINED IN TABLE 2. REFER TO DETAIL 7 FOR ADDITIONAL INFORMATION.
7. UNLESS OTHERWISE SHOWN PROVIDE DOWELS FROM SHEAR WALL, CAPS, OR FOOTINGS INTO SHEAR WALLS TO MATCH VERTICALS IN FIRST LIFT OF WALLS. SEE DETAIL 13.
8. UNLESS NOTED OTHERWISE AT TOPS OF ALL SHEAR WALLS PROVIDE 15 @ 400 DOWELS FROM WALL TO SLAB. WHERE WALL IS CONTINUOUS ABOVE SLAB SEE DETAIL 14.
9. PROVIDE TLS CLASS B (BOTTOM) FOR ALL VERTICAL BARS (REFER TO DETAIL T-C56B (fy = 400MPa) OR T-C57B (fy = 500MPa) FOR LENGTHS)
10. PROVIDE TLS CLASS B (TOP) FOR ALL HORIZONTAL BARS FOR CLAUSE A23.3 R.2.4 (REFER TO DETAIL T-C56B (fy = 400MPa) OR T-C57B (fy = 500MPa) FOR LENGTHS).
11. MINIMUM DOWEL LENGTH SHALL BE 2xTLS (BOTTOM).
12. PLACE HORIZONTAL REINFORCING ON OUTSIDE FACE OF WALL UNLESS NOTED OTHERWISE.
13. FOR WALLS THAT ARE UNBRACED FOR TWO STORIES OR MORE PROVIDE EITHER CONTINUOUS VERTICAL REINFORCEMENT FOR THE ENTIRE UNSUPPORTED HEIGHT OR USE MECHANICAL COUPLER AT THE LOCATION OF THE INTERMEDIATE SPLICE. PROVIDE TENSION LAP SPLICE (TOP) FOR ALL HORIZONTAL WALL REINFORCEMENT. IF BARS OF DIFFERENT DIAMETER ARE SPLICED, USE THE SPLICE LENGTH OF THE LARGER BAR.
14. UNLESS NOTED OTHERWISE, REFER TO THE ARCHITECTURAL, MECHANICAL, AND ELECTRICAL DRAWINGS FOR EXACT DIMENSIONS AND LOCATIONS OF WALL OPENINGS. THE CONTRACTOR SHALL PROVIDE, FOR THE ENGINEERS REVIEW, SLEEVING DRAWINGS SHOWING THE PROPOSED LOCATION AND INVERT (DIMENSIONED FROM THE SLAB DATUMS AND GRIDS) FOR ALL SLEEVES 75mm DIAMETER AND LARGER. NO OPENINGS OTHER THAN THOSE WHICH ARE INDICATED ON PLAN OR ELEVATION SHALL BE MADE WITHOUT THE APPROVAL OF THE ENGINEER.
15. WHERE MASONRY VENEER FACES A WALL, PROVIDE STANDARD DOVETAIL ANCHOR SLOTS, REFER TO TYPICAL DETAILS.
16. CLEAR CONCRETE COVER SHALL BE 25mm FOR WALLS ABOVE GRADE AND 40mm FOR WALLS BELOW GRADE UNLESS NOTED OTHERWISE.
17. PROVIDE 40mm CLEAR CONCRETE COVER FOR ALL ABOVE GRADE WALLS WHICH ARE EXPOSED TO FIRE ON BOTH SIDES SIMULTANEOUSLY AS DEFINED BY NBCC APPENDIX D.

TABLE 2: TIES FOR DISTRIBUTED VERTICAL REINFORCEMENT

WALL THICKNESS (mm)	TIE SPACING FOR DISTRIBUTED VERTICAL REINFORCEMENT f'c ≤ 50MPa								
	10M		15M		20M		25M	30M	35M
	VERTICAL BAR SPACING (mm)	TIE VERTICAL SPACING (mm)	VERTICAL BAR SPACING (mm)	TIE VERTICAL SPACING (mm)	VERTICAL BAR SPACING (mm)	TIE VERTICAL SPACING (mm)	TIE VERTICAL SPACING (mm)	TIE VERTICAL SPACING (mm)	TIE VERTICAL SPACING (mm)
200	< 200	160	< 400	200	< 600	200	-	-	-
250	< 160	160	< 320	240	< 480	250	250	-	-
300	< 140	160	< 270	240	< 400	300	300	300	-
350	< 120	160	< 230	240	< 350	320	350	350	350
400	< 100	160	< 200	240	< 300	320	400	400	400
450	-	-	< 180	240	< 270	320	400	450	450
500	-	-	< 160	240	< 240	320	400	480	480
600	-	-	< 140	240	< 200	320	400	480	480

NOTES;
1. TIES FOR DISTRIBUTED VERTICAL REINFORCEMENT ARE 10M.
2. THIS TABLE IS BASED ON f'c ≤ 50MPa. FOR Fc' > 50MPa REDUCE TIE VERTICAL SPACING IN TABLE BY MULTIPLYING BY 0.75.
3. DISTRIBUTED VERTICAL REINFORCEMENT WITH BAR SPACING LESS THAN THAT INDICATED FOR 10M, 15M AND 20M BARS SHALL BE TIED WITH MINIMUM TIE VERTICAL SPACING AS INDICATED.
4. DISTRIBUTED VERTICAL REINFORCEMENT WITH BAR SIZE LARGER THAN 20M SHALL BE TIED AT MINIMUM TIE VERTICAL SPACING INDICATED.
5. SEE ALSO DETAIL 7.

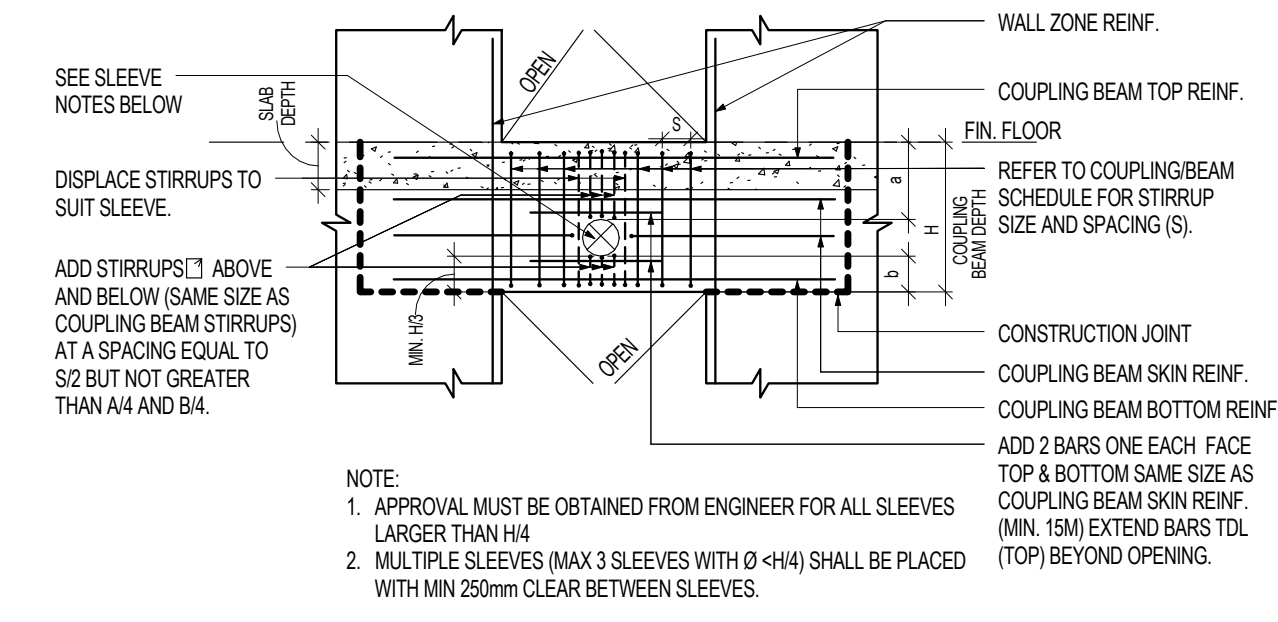
SEE SLEEVE NOTES BELOW
DISPLACE STIRRUPS TO SUIT SLEEVE.
ADD STIRRUPS ABOVE AND BELOW (SAME SIZE AS COUPLING BEAM STIRRUPS) AT A SPACING EQUAL TO S/2 BUT NOT GREATER THAN A/4 AND B/4.
SLAB DEPTH
OPEN
MIN. H/3
WALL ZONE REINF.
COUPLING BEAM TOP REINF.
FIN. FLOOR
REFER TO COUPLING/BEAM SCHEDULE FOR STIRRUP SIZE AND SPACING (S).
COUPLING BEAM DEPTH
CONSTRUCTION JOINT
COUPLING BEAM SKIN REINF.
COUPLING BEAM BOTTOM REINF.
ADD 2 BARS ONE EACH FACE TOP & BOTTOM SAME SIZE AS COUPLING BEAM SKIN REINF. (MIN. 15M) EXTEND BARS TDL (TOP) BEYOND OPENING.

NOTE:
1. APPROVAL MUST BE OBTAINED FROM ENGINEER FOR ALL SLEEVES LARGER THAN H/4
2. MULTIPLE SLEEVES (MAX 3 SLEEVES WITH Ø <H/4) SHALL BE PLACED WITH MIN 250mm CLEAR BETWEEN SLEEVES.

3 TYPICAL ADDITIONAL REINFORCEMENT COUPLING BEAM SLEEVES UP TO H/4

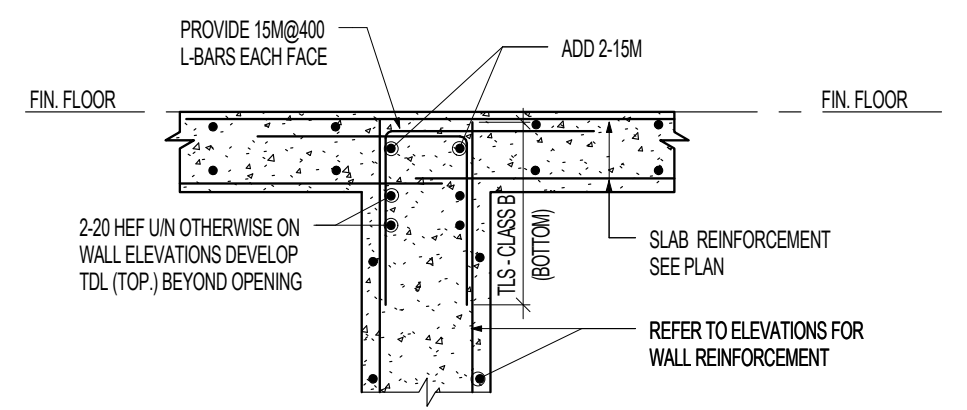
PROVIDE 15M@400 L-BARS EACH FACE
ADD 2-15M
FIN. FLOOR
2-20 HEF U/N OTHERWISE ON WALL ELEVATIONS DEVELOP TDL (TOP.) BEYOND OPENING
TLS - CLASS B (BOTTOM)
SLAB REINFORCEMENT SEE PLAN
REFER TO ELEVATIONS FOR WALL REINFORCEMENT

4 TYPICAL DETAIL AT TOP OF WALLS AND BELOW OPENINGS WHERE COUPLING BEAM IS NOT PROVIDED

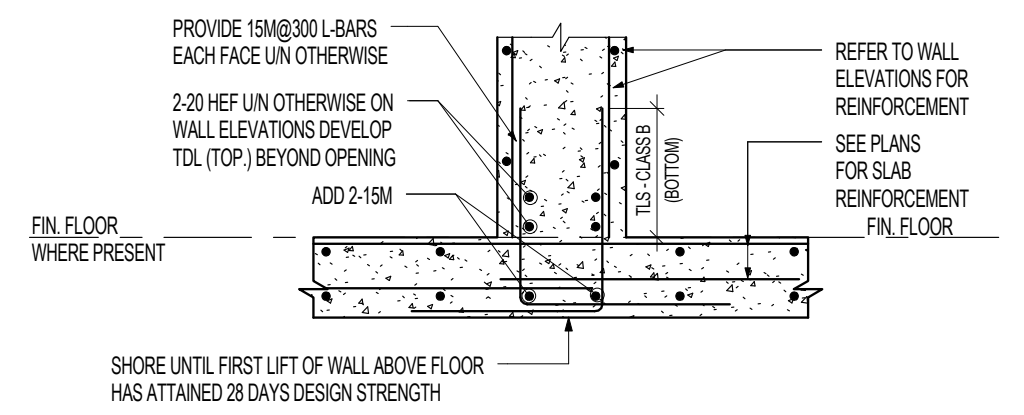
PROVIDE 15M@300 L-BARS EACH FACE U/N OTHERWISE
2-20 HEF U/N OTHERWISE ON WALL ELEVATIONS DEVELOP TDL (TOP.) BEYOND OPENING
ADD 2-15M
REFER TO WALL ELEVATIONS FOR REINFORCEMENT
SEE PLANS FOR SLAB REINFORCEMENT
FIN. FLOOR
FIN. FLOOR WHERE PRESENT
TLS - CLASS B (BOTTOM)
SHORE UNTIL FIRST LIFT OF WALL ABOVE FLOOR HAS ATTAINED 28 DAYS DESIGN STRENGTH

5 TYPICAL DETAIL AT BOTTOM OF WALLS AND ABOVE OPENINGS WHERE COUPLING BEAM IS NOT PROVIDED

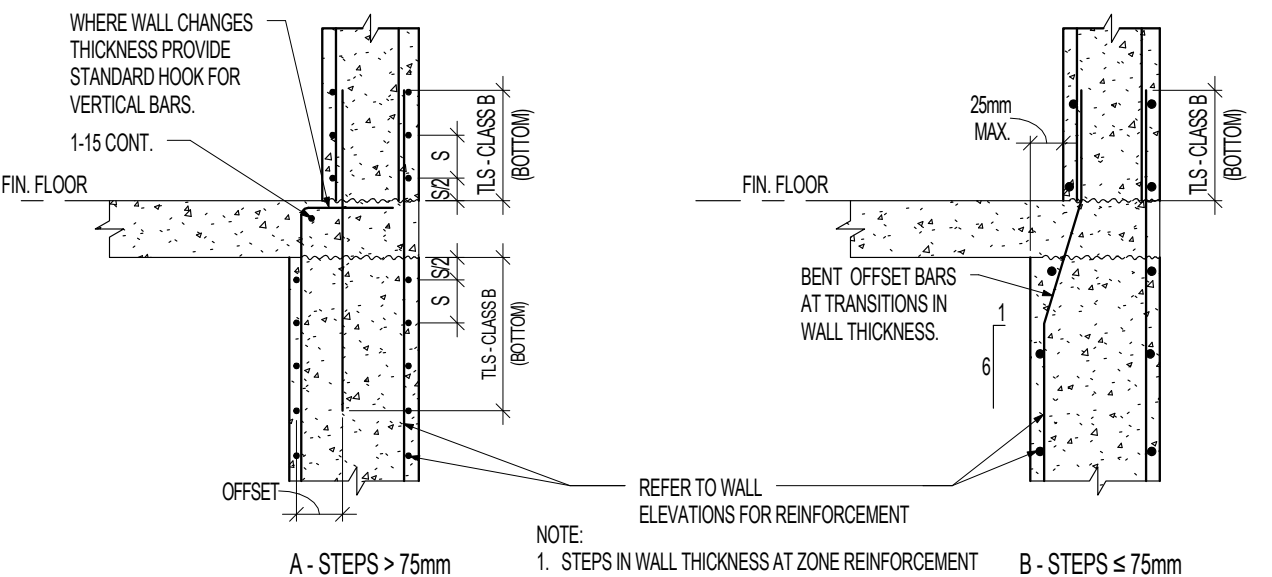
WHERE WALL CHANGES THICKNESS PROVIDE STANDARD HOOK FOR VERTICAL BARS.
1-15 CONT.
FIN. FLOOR
TLS - CLASS B (BOTTOM)
S
S/2
OFFSET
25mm MAX.
BENT OFFSET BARS AT TRANSITIONS IN WALL THICKNESS.
1
6
REFER TO WALL ELEVATIONS FOR REINFORCEMENT
A - STEPS > 75mm
B - STEPS ≤ 75mm

NOTE:
1. STEPS IN WALL THICKNESS AT ZONE REINFORCEMENT SHALL FOLLOW DETAIL A.

6 TYPICAL DETAIL AT WALL THICKNESS TRANSITIONS

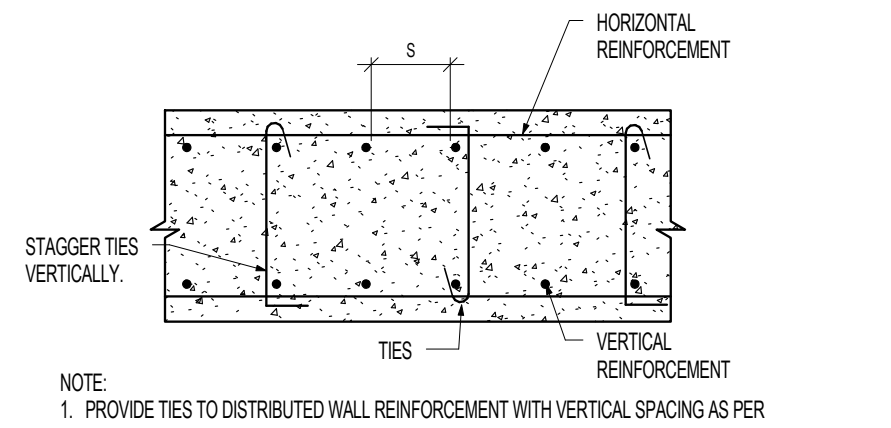
S
HORIZONTAL REINFORCEMENT
STAGGER TIES VERTICALLY.
TIES
VERTICAL REINFORCEMENT

NOTE:
1. PROVIDE TIES TO DISTRIBUTED WALL REINFORCEMENT WITH VERTICAL SPACING AS PER TABLE 2 UNLESS NOTED OTHERWISE ON WALL ELEVATIONS.
2. WHEN CLEAR SPACE (S) BETWEEN VERTICAL DISTRIBUTED REINFORCEMENT IS LARGER THAN 150mm, PROVIDE TIES AT EVERY VERTICAL BAR. WHEN S≤150, TIES MAY BE PROVIDED AT EVERY OTHER VERTICAL BAR AS SHOWN ABOVE.
3. REFER TO ZONE REINFORCEMENT DETAILS FOR TIES IN THOSE AREAS.

7 TYPICAL TIE DETAIL FOR DISTRIBUTED VERTICAL WALL REINFORCEMENT

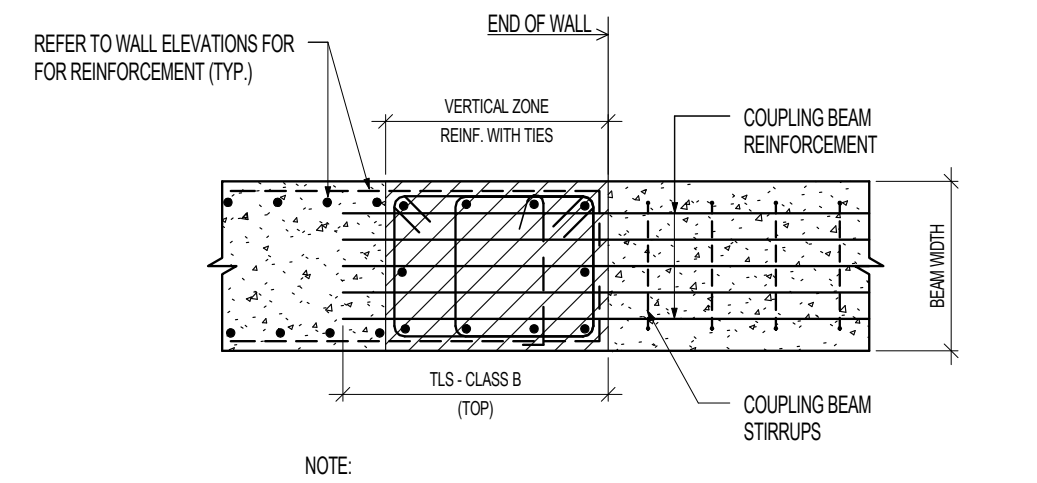
REFER TO WALL ELEVATIONS FOR FOR REINFORCEMENT (TYP.)
END OF WALL
VERTICAL ZONE REINF. WITH TIES
COUPLING BEAM REINFORCEMENT
BEAM WIDTH
TLS - CLASS B (TOP)
COUPLING BEAM STIRRUPS

NOTE:
1. COORDINATE WALL ZONE VERTICAL BAR PLACEMENT WITH BEAM HORIZONTAL REINFORCEMENT ARRANGEMENT.

8 TYPICAL COUPLING BEAM DETAIL PLAN DETAIL

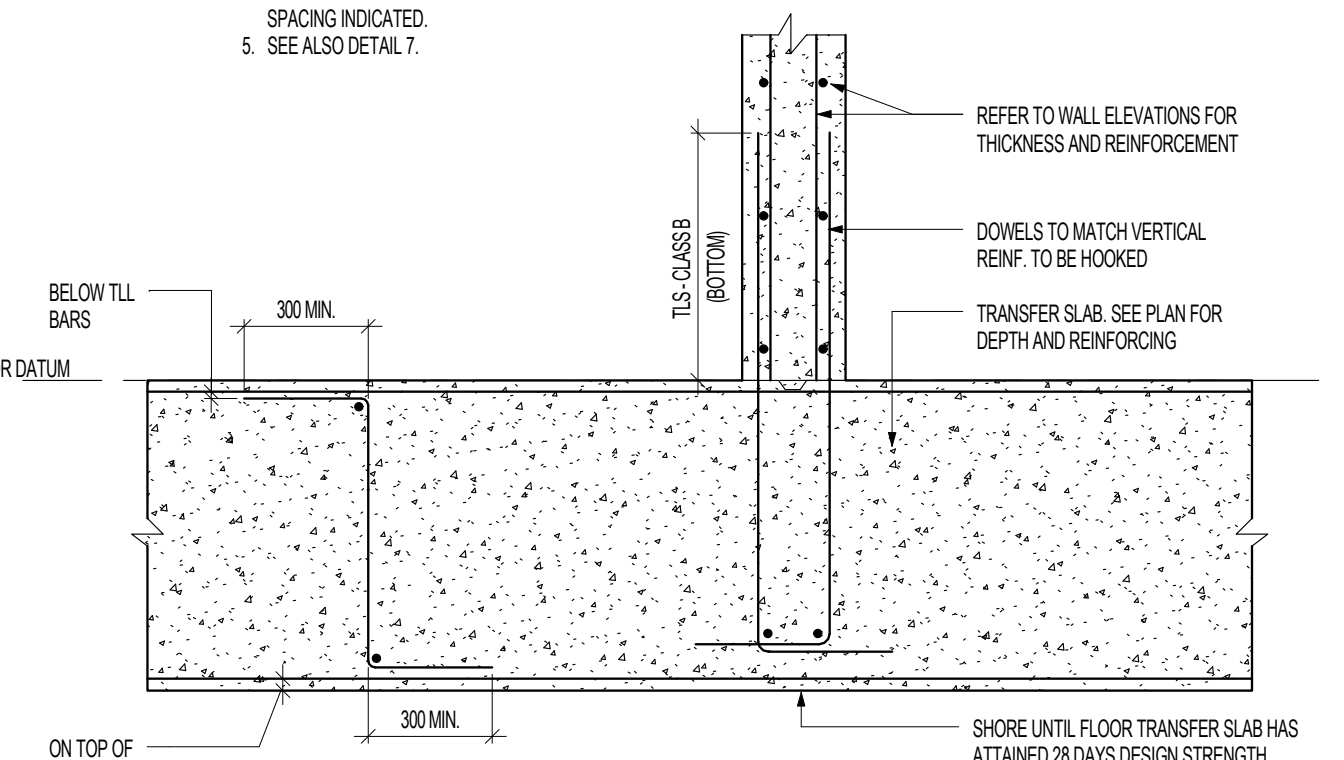
BELOW TLL BARS
300 MIN.
FLOOR DATUM
TLS - CLASS B (BOTTOM)
REFER TO WALL ELEVATIONS FOR THICKNESS AND REINFORCEMENT
DOWELS TO MATCH VERTICAL REINF. TO BE HOOKED
TRANSFER SLAB. SEE PLAN FOR DEPTH AND REINFORCING
ON TOP OF BUL BARS
300 MIN.
SHORE UNTIL FLOOR TRANSFER SLAB HAS ATTAINED 28 DAYS DESIGN STRENGTH.

9 TYPICAL DETAIL OF SHEAR WALL SUPPORTED BY TRANSFER SLAB

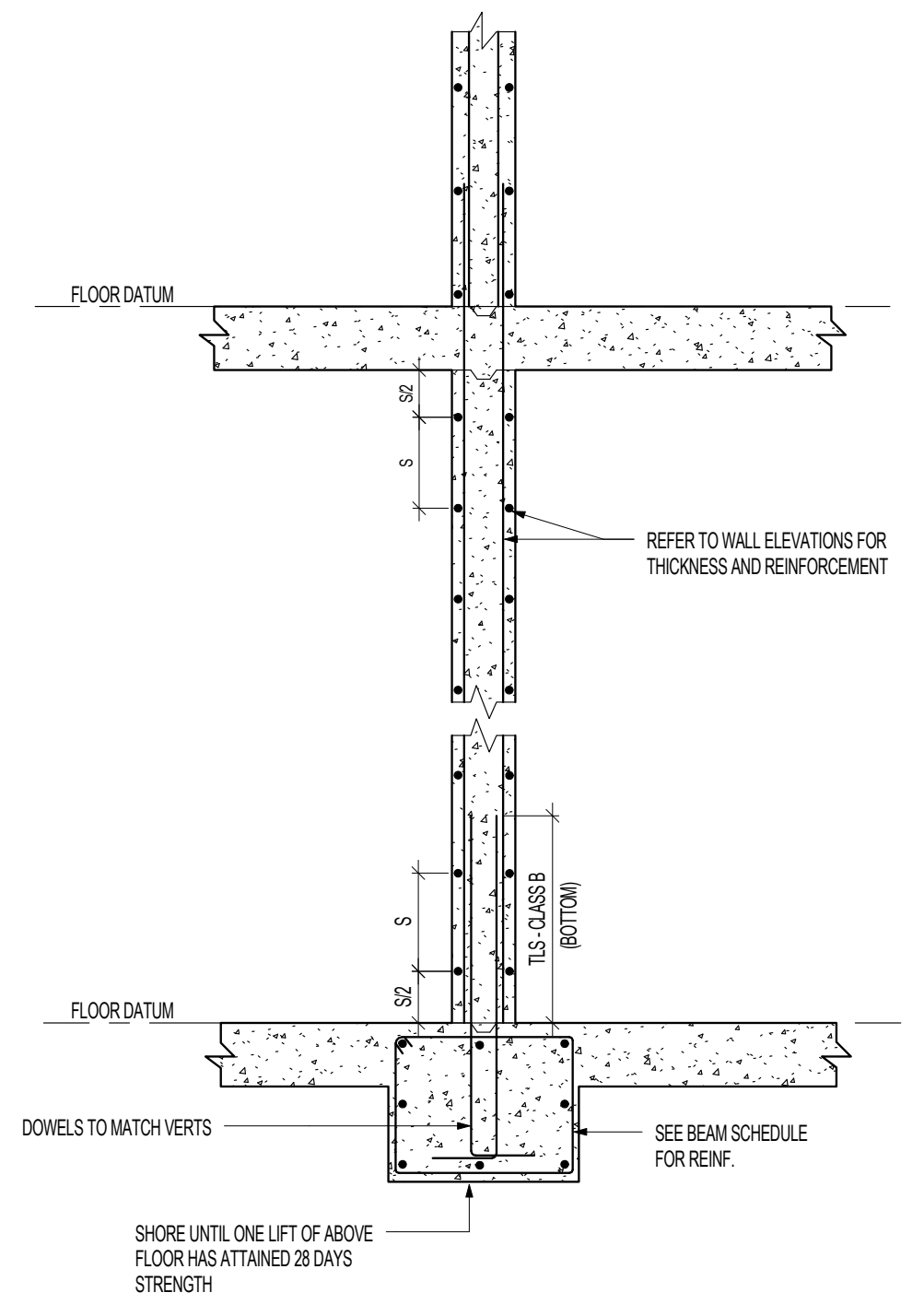
FLOOR DATUM
S/2
S
REFER TO WALL ELEVATIONS FOR THICKNESS AND REINFORCEMENT
TLS - CLASS B (BOTTOM)
FLOOR DATUM
DOWELS TO MATCH VERTS
SEE BEAM SCHEDULE FOR REINF.
SHORE UNTIL ONE LIFT OF ABOVE FLOOR HAS ATTAINED 28 DAYS STRENGTH

10 TYPICAL DETAIL OF SHEAR WALL SUPPORTED BY BEAM

LEGEND

⬚	WALLS AND COLUMN SHADED AS THUS INDICATE WALL AND COLUMN BELOW SLAB
▨	WALLS AND COLUMN SHADED AS THUS INDICATE WALL AND COLUMN ABOVE SLAB
⯃	- INDICATES COLUMN NUMBER OF BELOW SLAB. REFER TO COLUMN SCHEDULE
⬚	- INDICATES COLUMN NUMBER OF ABOVE SLAB. REFER TO COLUMN SCHEDULE

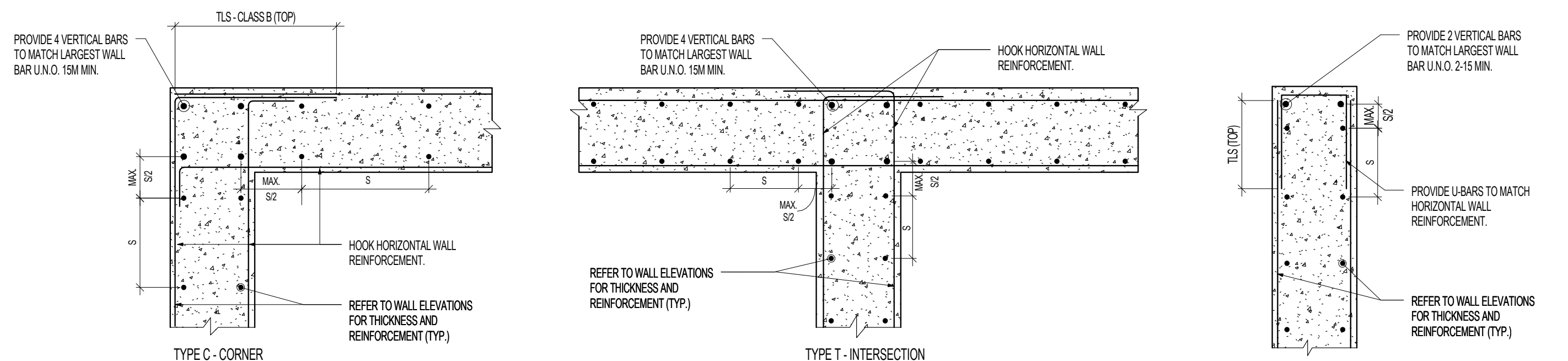
TLS - CLASS B (TOP)
PROVIDE 4 VERTICAL BARS TO MATCH LARGEST WALL BAR U.N.O. 15M MIN.
HOOK HORIZONTAL WALL REINFORCEMENT.
REFER TO WALL ELEVATIONS FOR THICKNESS AND REINFORCEMENT (TYP.)
MAX. S/2
S
TYPE C - CORNER
TYPE T - INTERSECTION
PROVIDE 2 VERTICAL BARS TO MATCH LARGEST WALL BAR U.N.O. 2-15 MIN.
TLS (TOP)
PROVIDE U-BARS TO MATCH HORIZONTAL WALL REINFORCEMENT.
TYPE E - END

NOTE:
S - SPACING OF VERTICAL DISTRIBUTED REINFORCEMENT. SEE WALL ELEVATIONS.

1. REFER TO TABLE 2 TO DETERMINE IF TIES FOR DISTRIBUTED VERTICAL REINFORCEMENT ARE REQUIRED. SEE DETAIL 7 WHEN TIES ARE REQUIRED

11 TYPICAL WALL DETAILS WITHOUT ZONE REINFORCEMENT

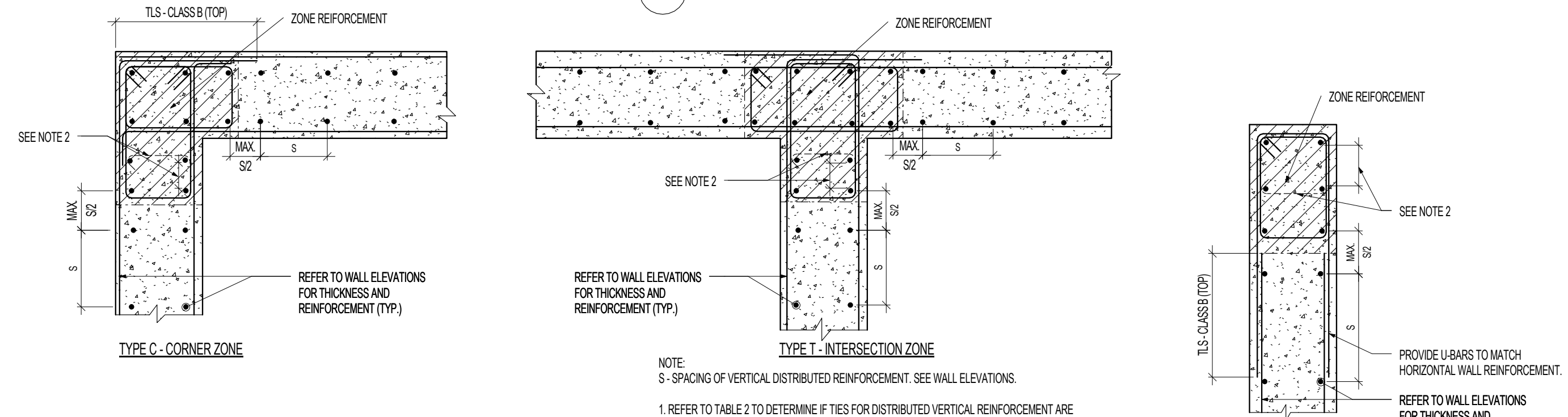
TLS - CLASS B (TOP)
ZONE REIFORCEMENT
SEE NOTE 2
MAX. S/2
S
REFER TO WALL ELEVATIONS FOR THICKNESS AND REINFORCEMENT (TYP.)
TYPE C - CORNER ZONE
TYPE T - INTERSECTION ZONE
ZONE REINFORCEMENT
TLS - CLASS B (TOP)
PROVIDE U-BARS TO MATCH HORIZONTAL WALL REINFORCEMENT.
TYPE E - END ZONE

NOTE:
S - SPACING OF VERTICAL DISTRIBUTED REINFORCEMENT. SEE WALL ELEVATIONS.

1. REFER TO TABLE 2 TO DETERMINE IF TIES FOR DISTRIBUTED VERTICAL REINFORCEMENT ARE REQUIRED. SEE DETAIL 7 WHEN TIES ARE REQUIRED.
2. WHEN CLEAR SPACE BETWEEN ADJACENT VERTICAL ZONE BARS IS LARGER THAN 150mm, PROVIDE TIES AT EVERY VERTICAL ZONE BAR. WHEN THE CLEAR SPACE IS ≤ 150mm, TIES MAY BE PROVIDED AT EVERY OTHER VERTICAL ZONE BAR.

12 TYPICAL WALL DETAILS WITH ZONE REINFORCEMENT

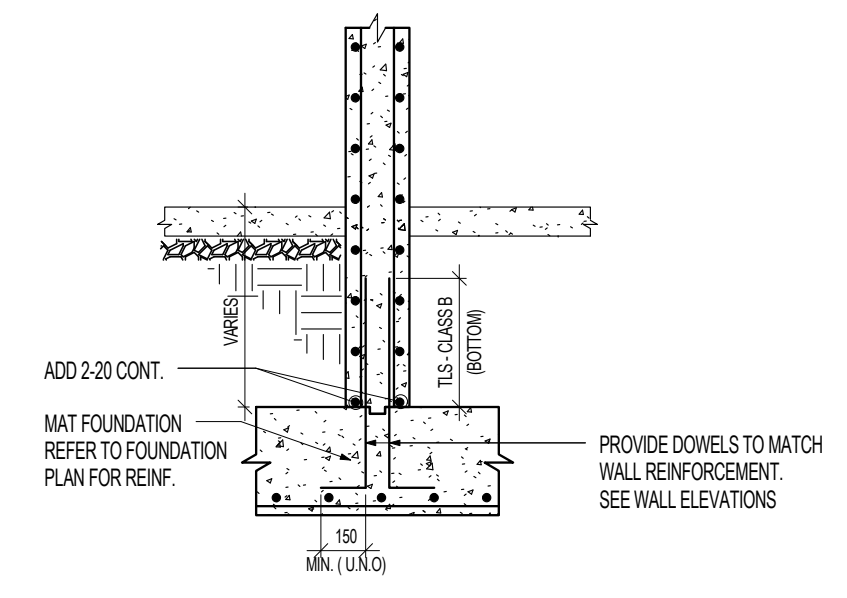
VARIES
TLS - CLASS B (BOTTOM)
ADD 2-20 CONT.
MAT FOUNDATION REFER TO FOUNDATION PLAN FOR REINF.
PROVIDE DOWELS TO MATCH WALL REINFORCEMENT. SEE WALL ELEVATIONS
150 MIN. (U.N.O)

13 TYPICAL SHEAR WALL DOWELS AT FOUNDATION

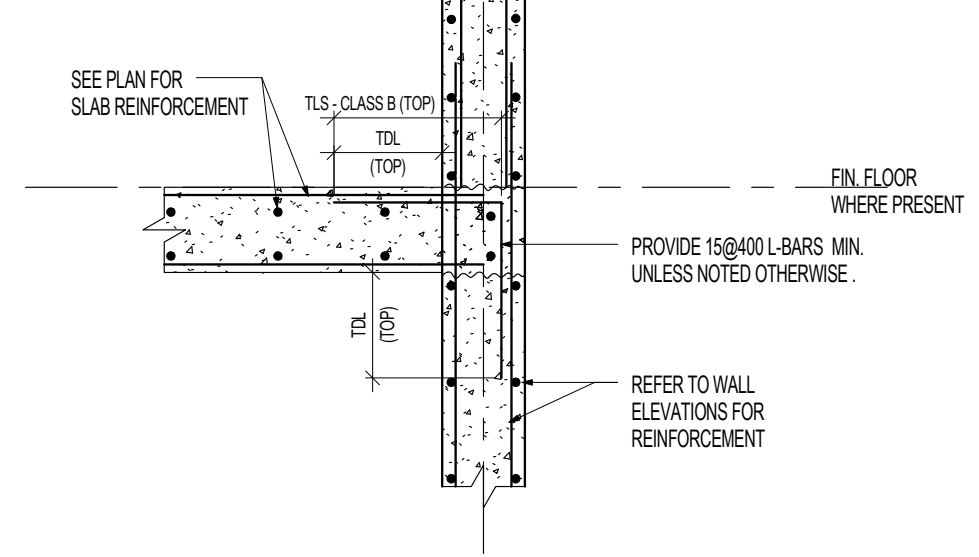
SEE PLAN FOR SLAB REINFORCEMENT
TLS - CLASS B (TOP)
TDL (TOP)
FIN. FLOOR WHERE PRESENT
PROVIDE 15@400 L-BARS MIN. UNLESS NOTED OTHERWISE .
REFER TO WALL ELEVATIONS FOR REINFORCEMENT

14 TYPICAL SLAB TO SHEAR WALL CONNECTION WHERE SLAB IS BEARING ON ONE SIDE OF THE WALL ONLY

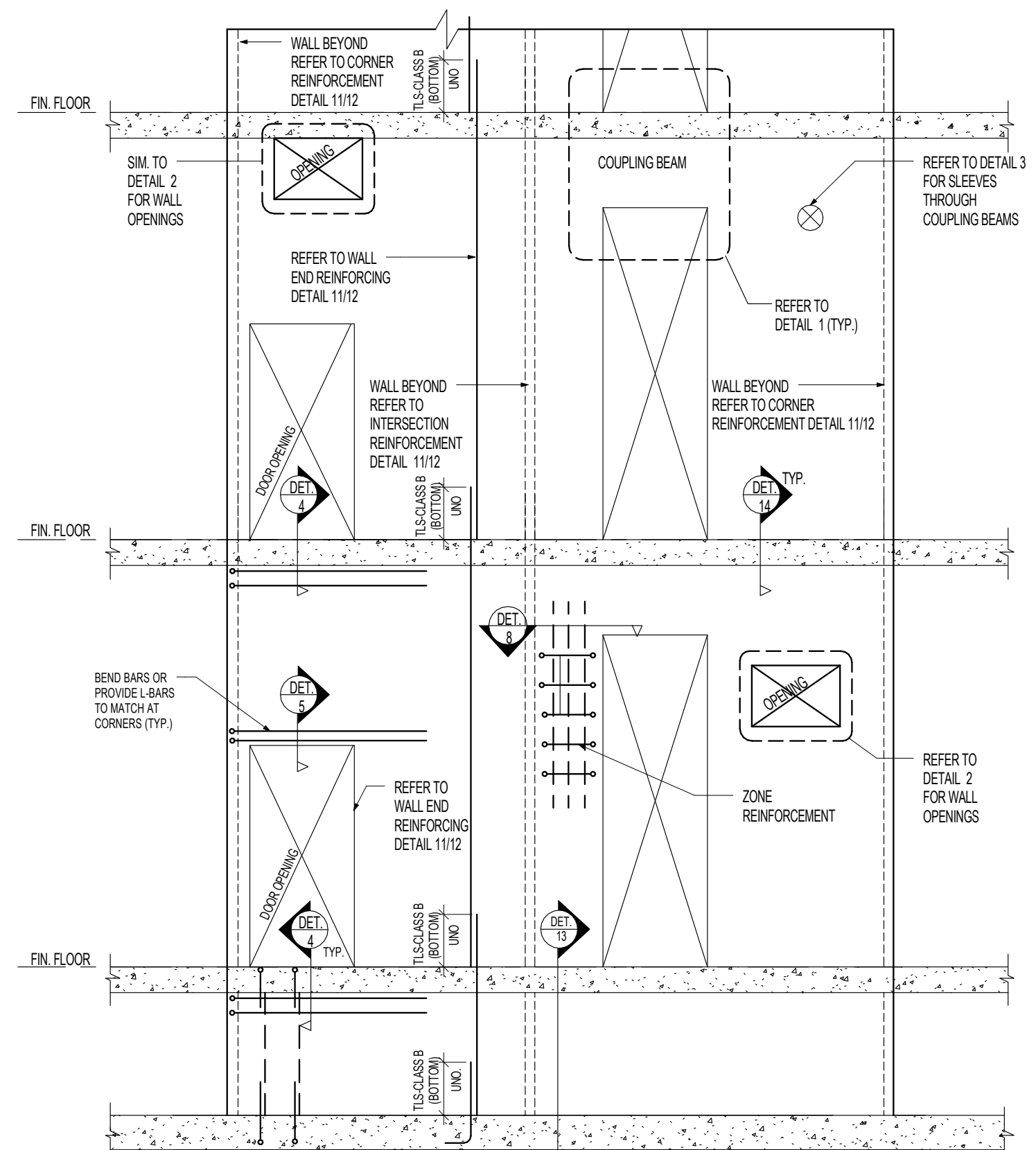
FIN. FLOOR
WALL BEYOND REFER TO CORNER REINFORCEMENT DETAIL 11/12
TLS-CLASS B (BOTTOM) UNO
SIM. TO DETAIL 2 FOR WALL OPENINGS
OPENING
COUPLING BEAM
REFER TO DETAIL 3 FOR SLEEVES THROUGH COUPLING BEAMS
REFER TO WALL END REINFORCING DETAIL 11/12
REFER TO DETAIL 1 (TYP.)
WALL BEYOND REFER TO INTERSECTION REINFORCEMENT DETAIL 11/12
WALL BEYOND REFER TO CORNER REINFORCEMENT DETAIL 11/12
DOOR OPENING
DET. 4
DET. 14 TYP.
DET. 8
BEND BARS OR PROVIDE L-BARS TO MATCH AT CORNERS (TYP.)
DET. 5
REFER TO WALL END REINFORCING DETAIL 11/12
ZONE REINFORCEMENT
REFER TO DETAIL 2 FOR WALL OPENINGS
DET. 4 TYP.
DET. 13

NOTE:
1. REFER TO WALL DETAILS WITH OR WITHOUT ZONE REINFORCEMENT BASED ON WALL ELEVATIONS.

15 TYPICAL WALL ELEVATIONS

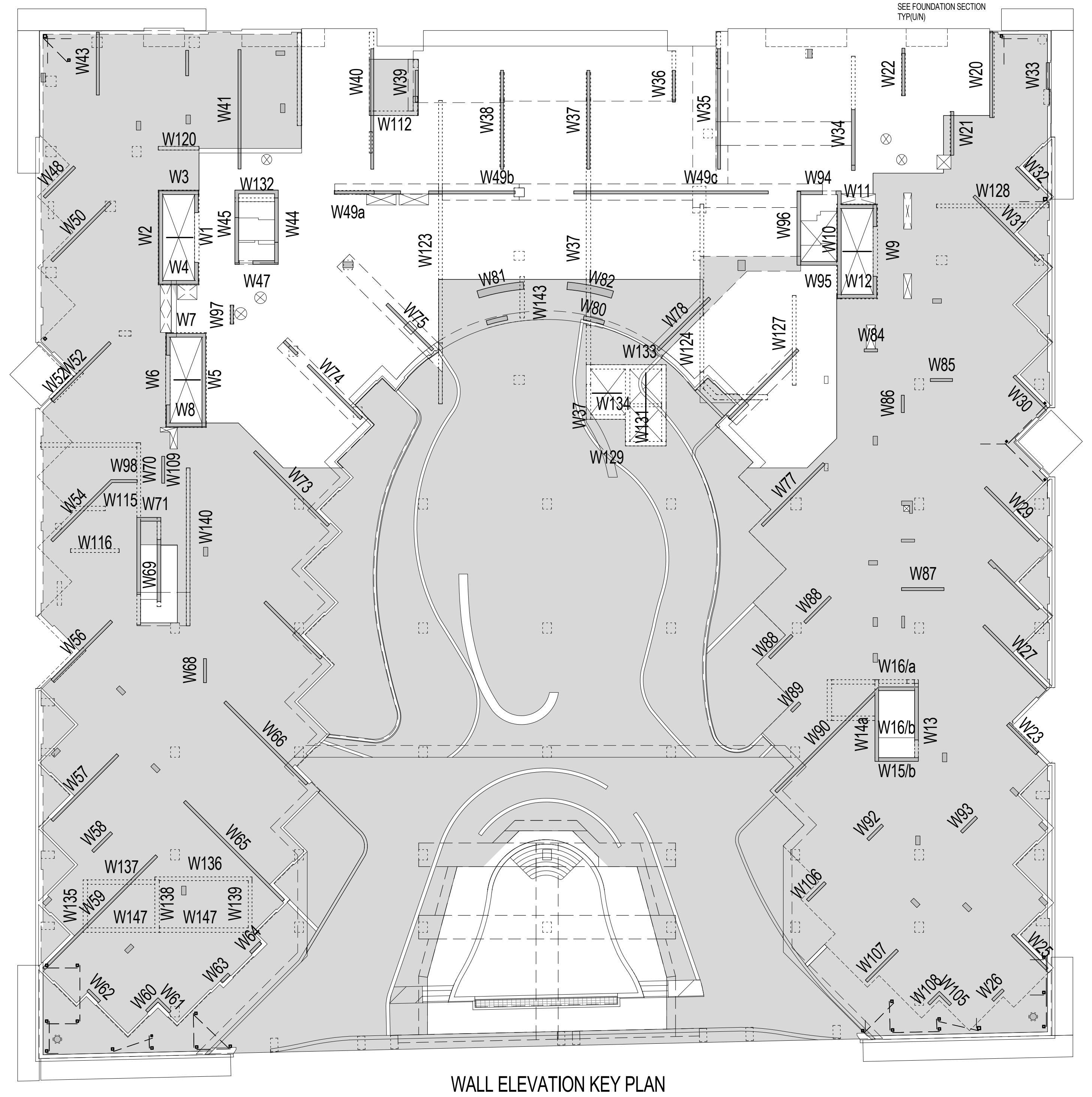
FOUNDATION WALL SEE FOUNDATION SECTION TYP(U/N)
W43
W120
W41
W40
W39
W112
W38
W37
W36
W35
W22
W20
W33
W34
W21
W48
W3
W132
W49b
W49a
W49a
W94
W11
W128
W32
W50
W2
W45
W44
W4
W47
W123
W37
W96
W10
W95
W12
W9
W31
W81
W143
W82
W80
W127
W84
W7
W97
W75
W78
W133
W124
W85
W52W52
W6
W5
W74
W134
W86
W8
W37
W132
W129
W30
W54
W98
W115
W109
W71
W140
W73
W77
W29
W116
W69
W87
W88
W28
W55
W68
W89
W16/a
W27
W66
W90
W148
W16/b
W13
W15b
W23
W57
W92
W93
W58
W136
W65
W137
W135
W38
W139
W147
W147
W64
W106
W62
W60
W61
W63
W107
W108
W105
W26
W25

WALL ELEVATION KEY PLAN
1 : 175

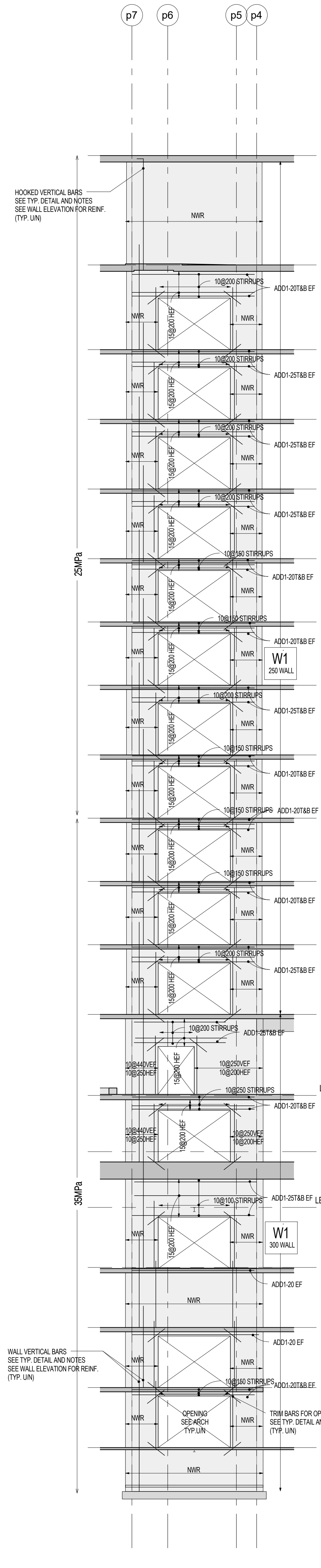
p7
p6
p5
p4
HOOKED VERTICAL BARS SEE TYP. DETAIL AND NOTES SEE WALL ELEVATION FOR REINF (TYP. U/N)
LEVEL 14
LEVEL 13
LEVEL 12
LEVEL 11
LEVEL 10
LEVEL 9
LEVEL 8
LEVEL 7
LEVEL 6
LEVEL 5
LEVEL 4
LEVEL 3
LEVEL 2
LEVEL 1 MEZZ.
LEVEL 1
LEVEL P1 MEZZ.
LEVEL P1
LEVEL P2
LEVEL P3
LEVEL P4
NWR
25MPa
35MPa
W1 250 WALL
W1 300 WALL
WALL VERTICAL BARS SEE TYP. DETAIL AND NOTES SEE WALL ELEVATION FOR REINF (TYP. U/N)
OPENING TYP U/N
TRIM BARS FOR OPENING SEE TYP. DETAIL AND NOTES (TYP. U/N)

W1 WALL ELEVATION
S3-01 1 : 100

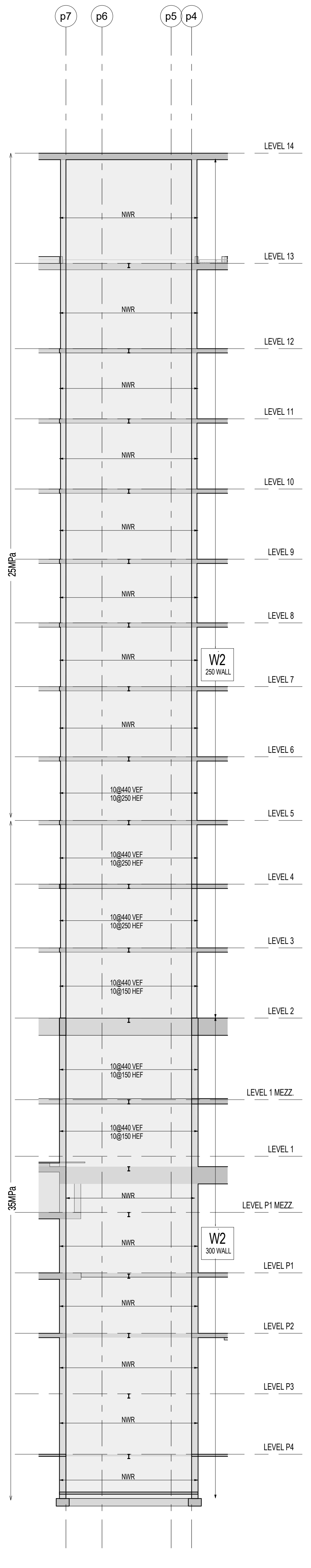
p7
p6
p5
p4
LEVEL 14
LEVEL 13
LEVEL 12
LEVEL 11
LEVEL 10
LEVEL 9
LEVEL 8
LEVEL 7
LEVEL 6
LEVEL 5
LEVEL 4
LEVEL 3
LEVEL 2
LEVEL 1 MEZZ.
LEVEL 1
LEVEL P1 MEZZ.
LEVEL P1
LEVEL P2
LEVEL P3
LEVEL P4
NWR
25MPa
35MPa
W2 250 WALL
W2 300 WALL

W2 WALL ELEVATION
S3-01 1 : 100

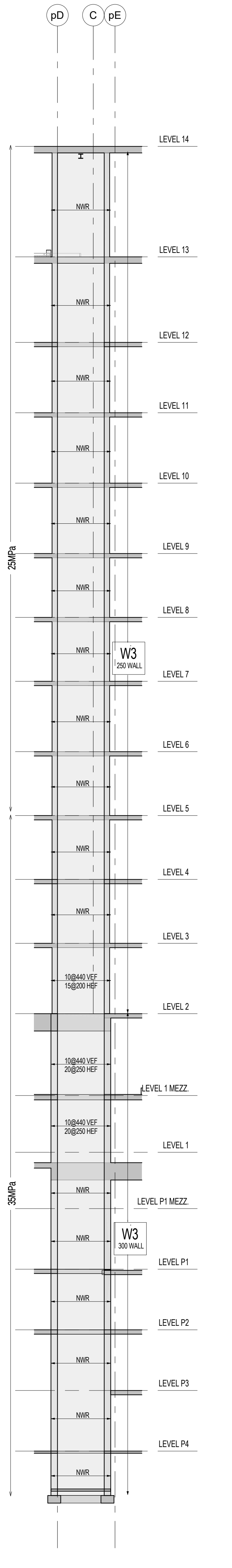
pD
C
pE
LEVEL 14
LEVEL 13
LEVEL 12
LEVEL 11
LEVEL 10
LEVEL 9
LEVEL 8
LEVEL 7
LEVEL 6
LEVEL 5
LEVEL 4
LEVEL 3
LEVEL 2
LEVEL 1 MEZZ.
LEVEL 1
LEVEL P1 MEZZ.
LEVEL P1
LEVEL P2
LEVEL P3
LEVEL P4
NWR
25MPa
35MPa
W3 250 WALL
W3 300 WALL

W3 WALL ELEVATION
S3-01 1 : 100

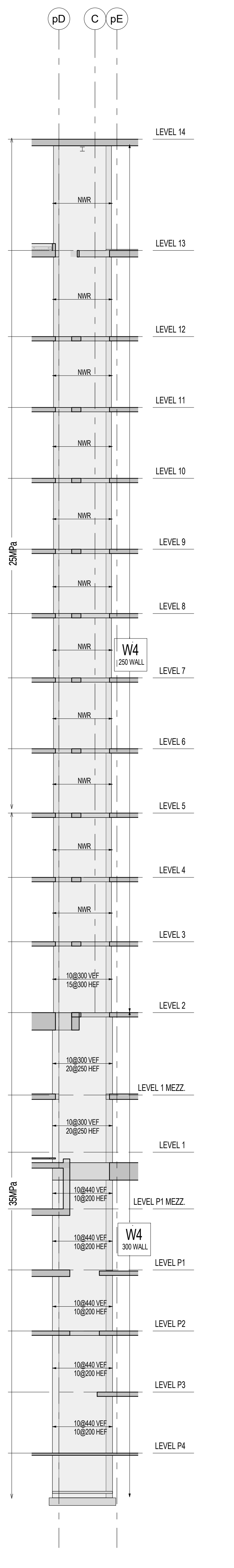
pD
C
pE
LEVEL 14
LEVEL 13
LEVEL 12
LEVEL 11
LEVEL 10
LEVEL 9
LEVEL 8
LEVEL 7
LEVEL 6
LEVEL 5
LEVEL 4
LEVEL 3
LEVEL 2
LEVEL 1 MEZZ.
LEVEL 1
LEVEL P1 MEZZ.
LEVEL P1
LEVEL P2
LEVEL P3
LEVEL P4
NWR
25MPa
35MPa
W4 250 WALL
W4 300 WALL

W4 WALL ELEVATION
S3-01 1 : 100

Contractor Must Check And Verify All Dimensions On The Job.

Do Not Scale The Drawings.

All Drawings, Specifications And Related Documents Are The Copyright Of The Architect And Must Be Returned Upon Request.

Reproduction Of Drawings, Specifications And Related Documents In Part Or Whole Is Forbidden Without The Architects Written Permission.

This Drawing Is Not To Be Used For Construction Until Signed ByThe Architect.

Date:

DEC.18,2015 DEC.18,2015

stephenson ENGINEERING
2550 Victoria Park Ave. Suite 602
Toronto ON M2J 5A9 | Tel: (416) 635 9970
www.stephenson-eng.com | info@stephenson-eng.com

No	Revision	Date

No	Issued For	Date
7	ISSUED FOR STEEL TENDER	DEC.18,2015
4	BUILDING PERMIT RESUBMISSION	SEPT.21,2015
3	BUILDING PERMIT RESUBMISSION	JULY 22,2015
2	BUILDING PERMIT SUBMISSION	JUNE 12,2015
1	ISSUED FOR WT REVIEW	MAY 01,2015

AQUAVISTA
AT BAYSIDE TORONTO

Drawing Title
WALL ELEVATIONS AND NOTES

Project
Hines TRIDEL®
AQUAVISTA
Block 3 - R3 & R4
Merchant's Whart
Toronto, ON

Scale: As indicated
Drawn by: DC
Checked by: BK/BBS
Project No.: 20140031
Date: DEC.18,2015
Drawing No.: S3-01

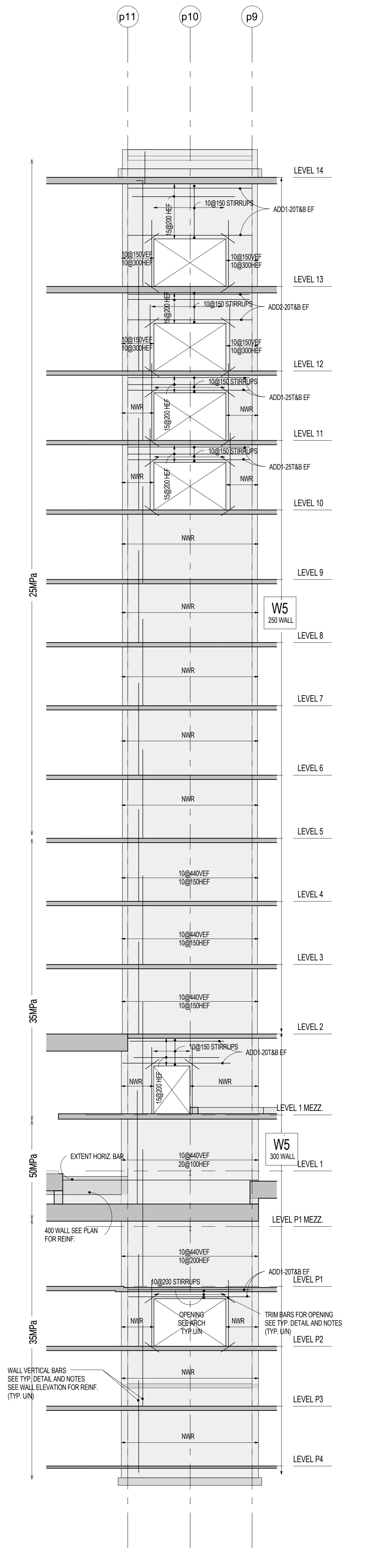
p11
p10
p9
LEVEL 14
LEVEL 13
LEVEL 12
LEVEL 11
LEVEL 10
LEVEL 9
LEVEL 8
LEVEL 7
LEVEL 6
LEVEL 5
LEVEL 4
LEVEL 3
LEVEL 2
LEVEL 1 MEZZ.
LEVEL 1
LEVEL P1 MEZZ.
LEVEL P1
LEVEL P2
LEVEL P3
LEVEL P4
W5
250 WALL
W5
300 WALL
25MPa
35MPa
50MPa
EXTENT HORIZ. BAR
400 WALL SEE PLAN FOR REINF.
WALL VERTICAL BARS SEE TYP. DETAIL AND NOTES SEE WALL ELEVATION FOR REINF. (TYP. U/N)
TRIM BARS FOR OPENING SEE TYP. DETAIL AND NOTES (TYP. U/N)
OPENING SEE ARCH TYP. U/N
NWR

W5 WALL ELEVATION
S3-02 1 : 100

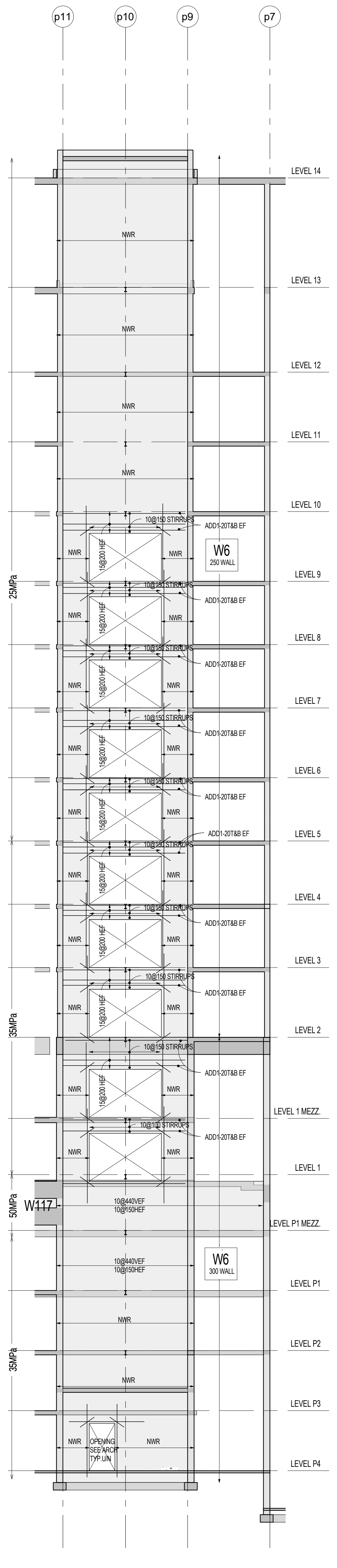
p11
p10
p9
p7
W6
250 WALL
W6
300 WALL
W117
25MPa
35MPa
50MPa
OPENING SEE ARCH TYP. U/N
NWR

W6 WALL ELEVATION
S3-02 1 : 100

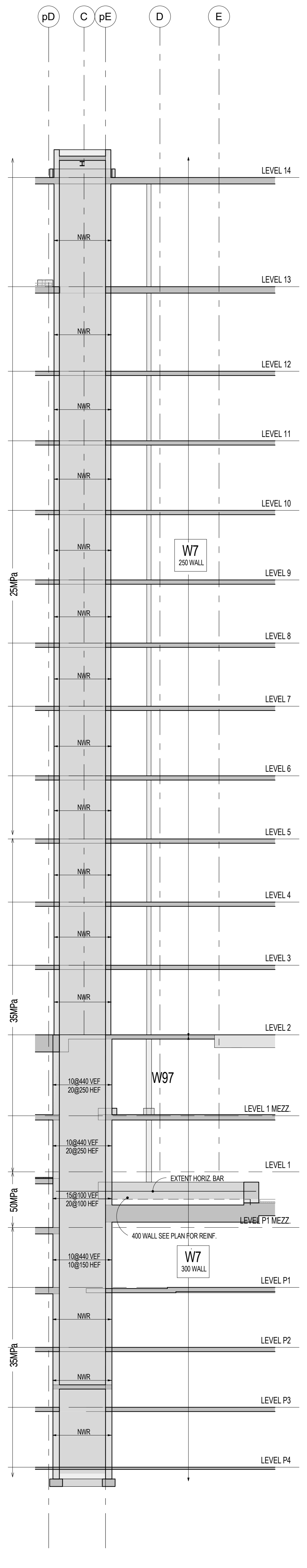
pD
C
pE
D
E
W7
250 WALL
W7
300 WALL
W97
25MPa
35MPa
50MPa
EXTENT HORIZ. BAR
400 WALL SEE PLAN FOR REINF.

W7 WALL ELEVATION
S3-02 1 : 100

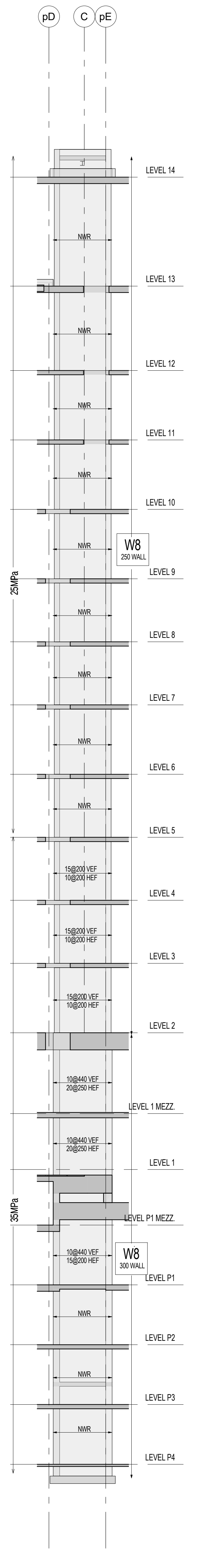
pD
C
pE
W8
250 WALL
W8
300 WALL
25MPa
35MPa

W8 WALL ELEVATION
S3-02 1 : 100

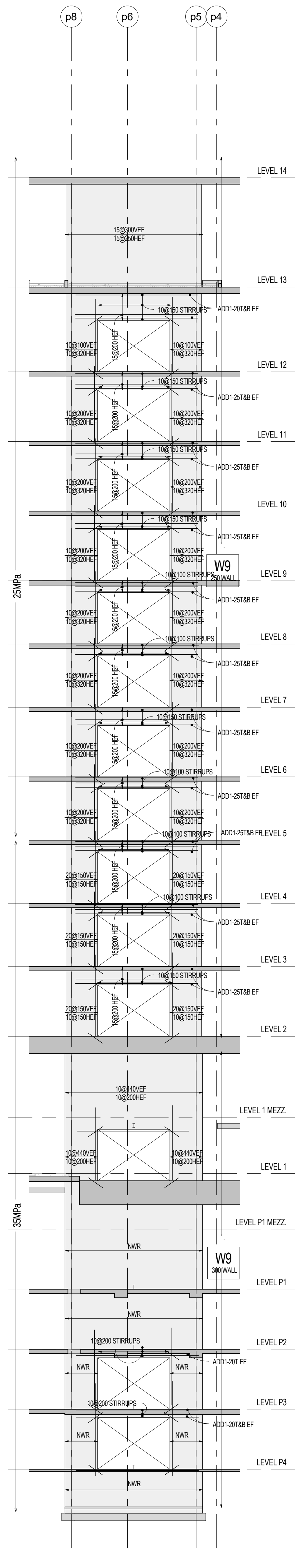
p8
p6
p5
p4
W9
300 WALL
W9
300 WALL
25MPa
35MPa
NWR

W9 WALL ELEVATION
S3-02 1 : 100

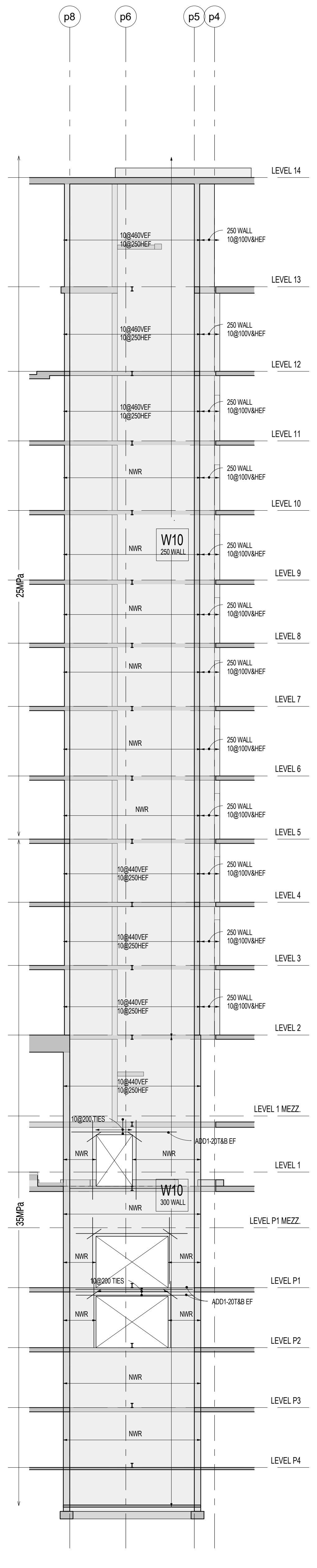
p8
p6
p5
p4
W10
250 WALL
W10
300 WALL
250 WALL
25MPa
35MPa
NWR

W10 WALL ELEVATION
S3-02 1 : 100

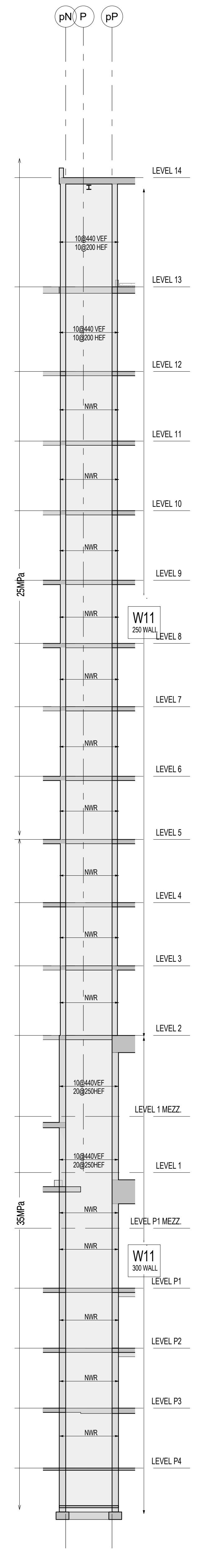
pN
P
pP
W11
300 WALL
W11
300 WALL
25MPa
35MPa
NWR

W11 WALL ELEVATION
S3-02 1 : 100

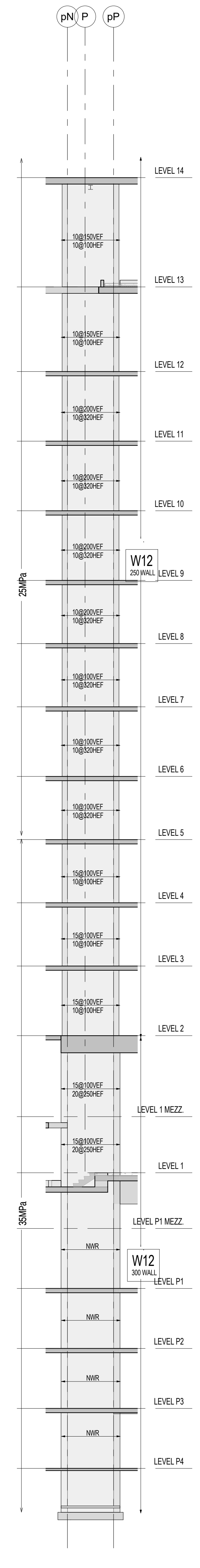
pN
P
pP
W12
250 WALL
W12
300 WALL
25MPa
35MPa

W12 WALL ELEVATION
S3-02 1 : 100

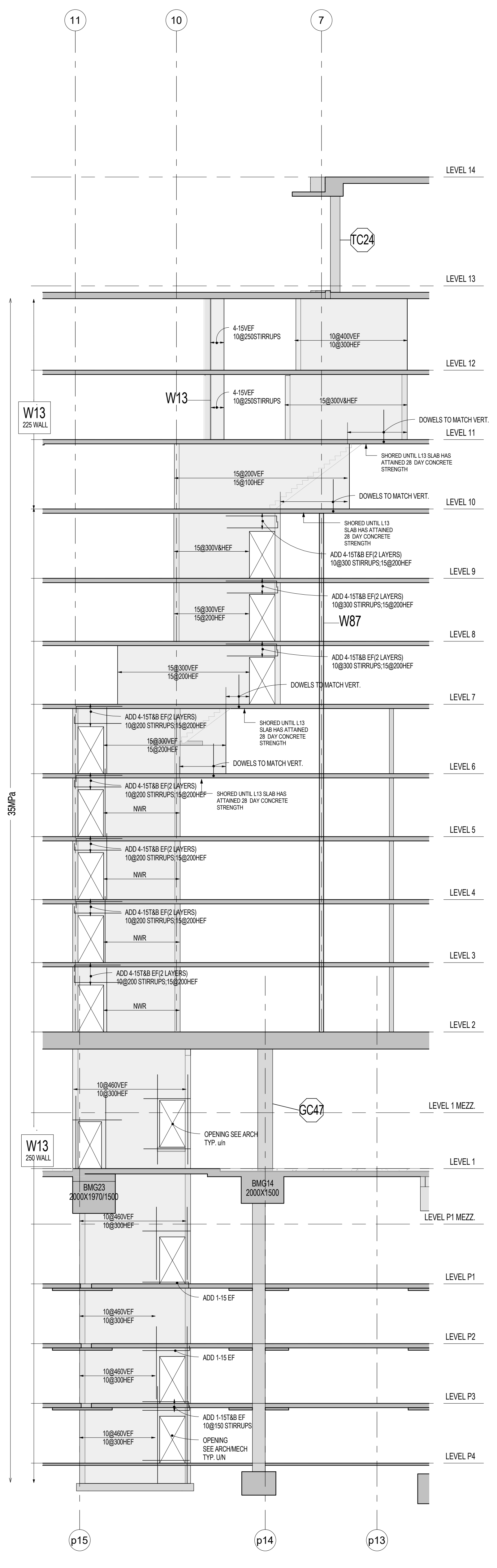
11
10
7
p15
p14
p13
TC24
W13
225 WALL
W13
W13
250 WALL
W87
GC47
BM223
BM214
2000X1500
35MPa
DOWELS TO MATCH VERT.
SHORED UNTIL L13 SLAB HAS ATTAINED 28 DAY CONCRETE STRENGTH
OPENING SEE ARCH TYP. U/N
NWR

W13 WALL ELEVATION
S3-02 1 : 100

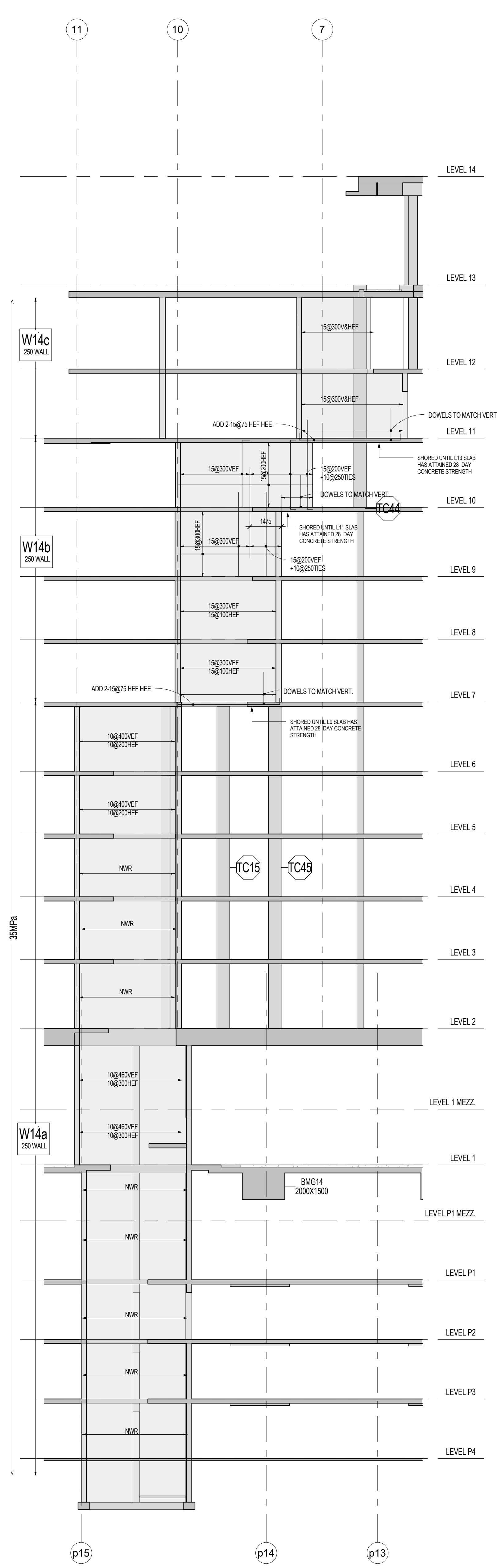
11
10
7
p15
p14
p13
W14c
250 WALL
W14b
250 WALL
W14a
250 WALL
TC44
TC15
TC45
BM214
2000X1500
35MPa
DOWELS TO MATCH VERT.
SHORED UNTIL L11 SLAB HAS ATTAINED 28 DAY CONCRETE STRENGTH
NWR

W14 WALL ELEVATION
S3-02 1 : 100

REFER TO NOTES ON SHEET S3-01

Contractor Must Check And Verify All Dimensions On The Job.

Do Not Scale The Drawings.

All Drawings, Specifications And Related Documents Are The Copyright Of The Architect And Must Be Returned Upon Request.

Reproduction Of Drawings, Specifications And Related Documents In Part Or Whole Is Forbidden Without The Architects Written Permission.

This Drawing Is Not To Be Used For Construction Until Signed ByThe Architect.

Date:

DEC.18,2015 DEC.18,2015

stephenson
ENGINEERING
2550 Victoria Park Ave. Suite 602
Toronto ON M2J 5A9 | Tel: (416) 635 9970
www.stephenson-eng.com | info@stephenson-eng.com

No	Revision	Date

No	Issued For	Date
7	ISSUED FOR STEEL TENDER	DEC.18,2015
4	BUILDING PERMIT RESUBMISSION	SEPT.21,2015
3	BUILDING PERMIT RESUBMISSION	JULY 22,2015
2	BUILDING PERMIT SUBMISSION	JUNE 12,2015
1	ISSUED FOR WT REVIEW	MAY 01,2015

AQUAVISTA
AT BAYSIDE TORONTO

Drawing Title
WALL ELEVATIONS

Project
Hines TRIDEL®
AQUAVISTA
Block 3 - R3 & R4
Merchant's Whart
Toronto, ON

Scale
1 : 100
Drawn by
DC
Checked by
BK/BBS
Project No.
20140031
Date
DEC.18,2015
Drawing No.
S3-02

Plot Date: 3/9/2016 10:01:58 AM

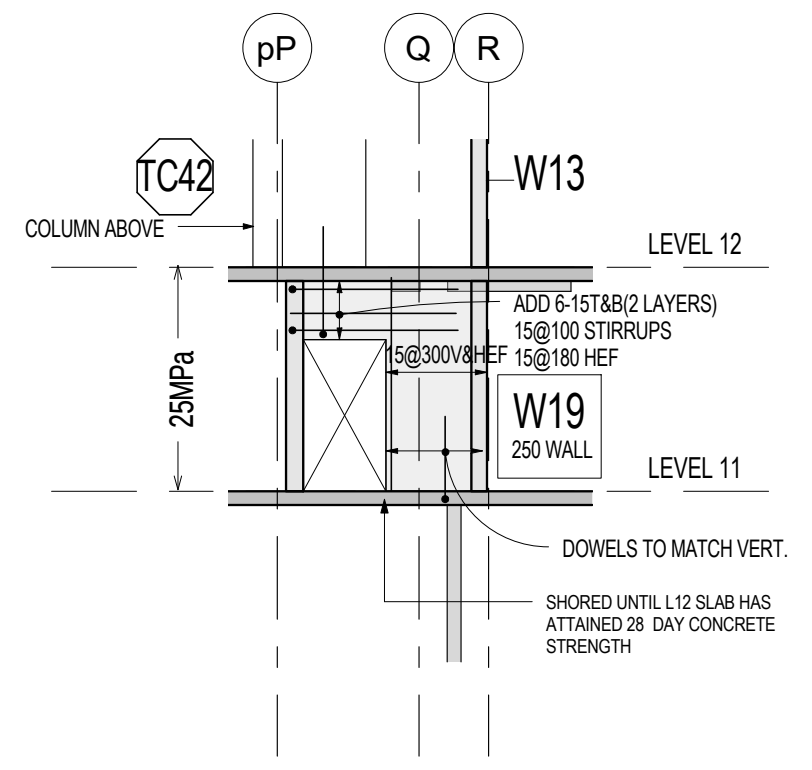
pP
Q
R
TC42
W13
COLUMN ABOVE
LEVEL 12
W19
250 WALL
LEVEL 11
25MPa
DOWELS TO MATCH VERT.

W19 WALL ELEVATION
S3-03 1 : 100

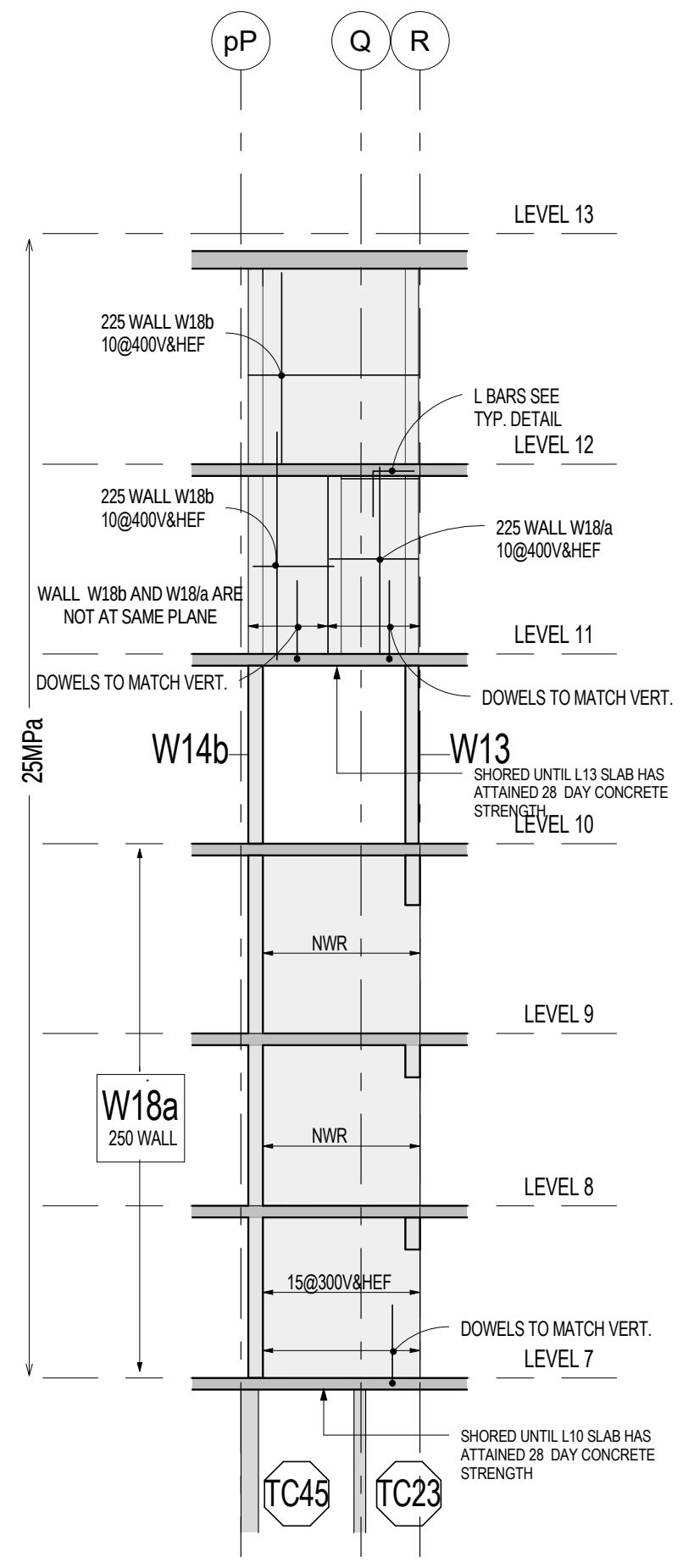
pP
Q
R
LEVEL 13
LEVEL 12
LEVEL 11
LEVEL 10
LEVEL 9
LEVEL 8
LEVEL 7
W14b
W13
W18a
250 WALL
25MPa
DOWELS TO MATCH VERT.
TC45
TC23

W18 WALL ELEVATION
S3-03 1 : 100

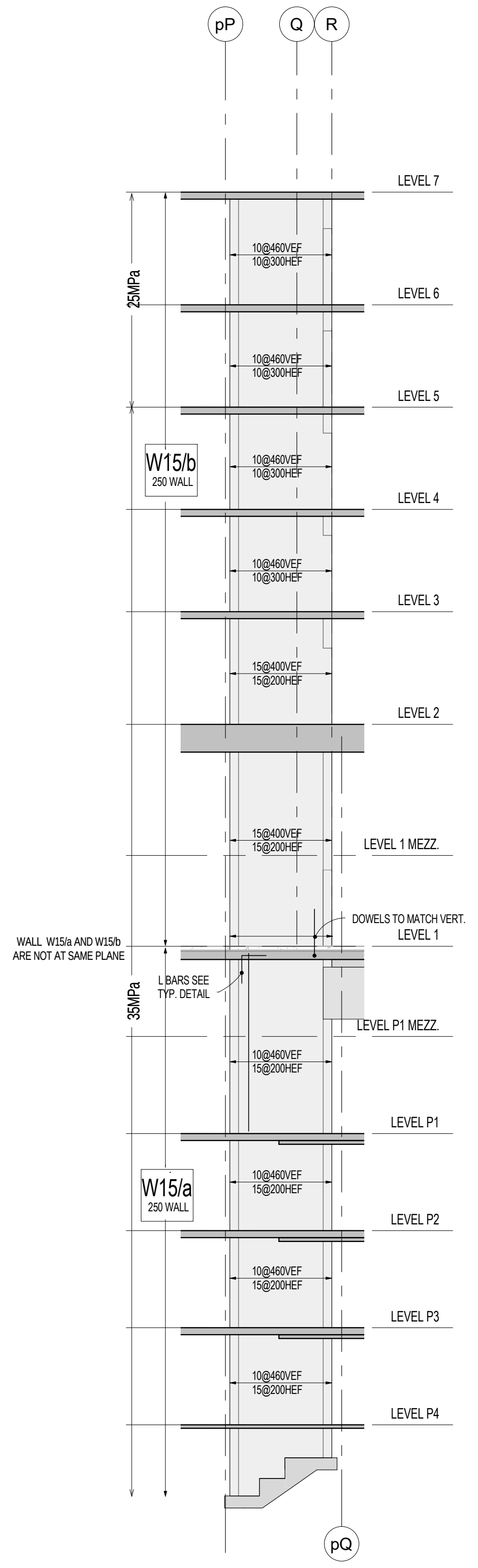
pP
Q
R
LEVEL 7
LEVEL 6
LEVEL 5
LEVEL 4
LEVEL 3
LEVEL 2
LEVEL 1 MEZZ.
LEVEL 1
LEVEL P1 MEZZ.
LEVEL P1
LEVEL P2
LEVEL P3
LEVEL P4
W15/b
250 WALL
W15/a
250 WALL
25MPa
35MPa
WALL W15b AND W15/b ARE NOT AT SAME PLANE
DOWELS TO MATCH VERT.
pQ

W15 WALL ELEVATION
S3-03 1 : 100

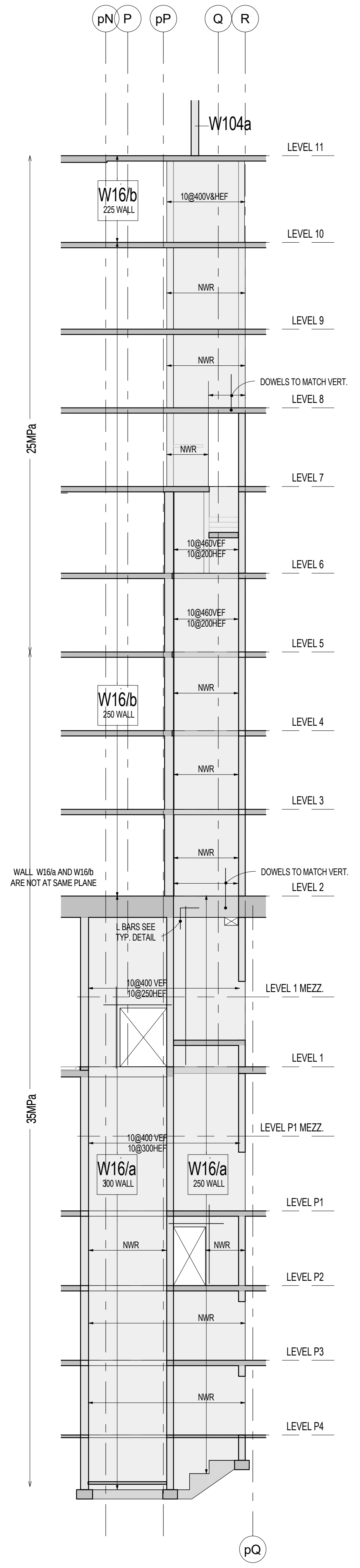
pN
P
pP
Q
R
W104a
LEVEL 11
LEVEL 10
LEVEL 9
LEVEL 8
LEVEL 7
LEVEL 6
LEVEL 5
LEVEL 4
LEVEL 3
LEVEL 2
LEVEL 1 MEZZ.
LEVEL 1
LEVEL P1 MEZZ.
LEVEL P1
LEVEL P2
LEVEL P3
LEVEL P4
W16/b
225 WALL
W16/b
250 WALL
W16/a
300 WALL
W16/a
250 WALL
25MPa
35MPa
DOWELS TO MATCH VERT.
WALL W16a AND W16b ARE NOT AT SAME PLANE
pQ

W16 WALL ELEVATION
S3-03 1 : 100

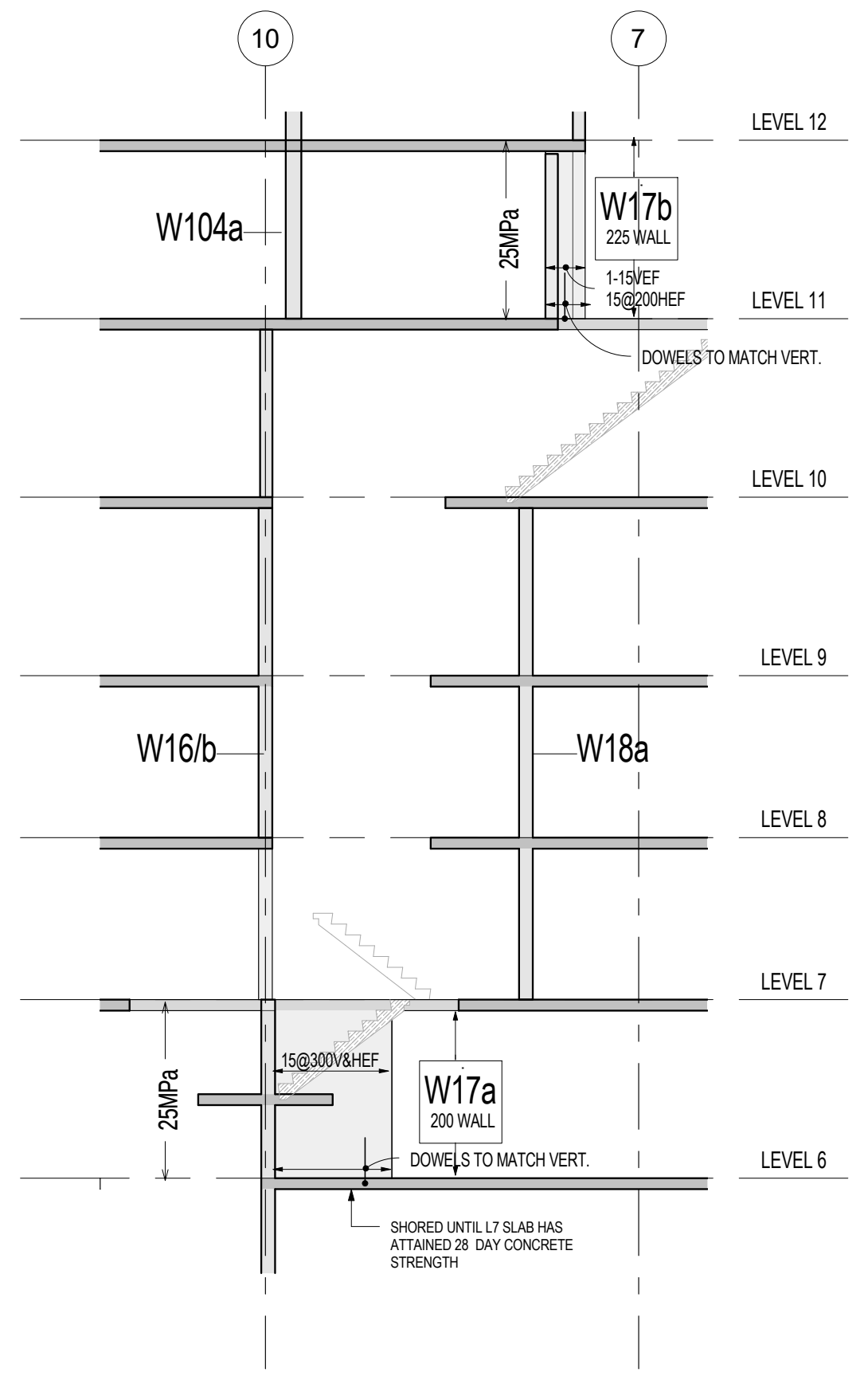
10
7
LEVEL 12
LEVEL 11
LEVEL 10
LEVEL 9
LEVEL 8
LEVEL 7
LEVEL 6
W104a
W17b
225 WALL
W16/b
W18a
W17a
200 WALL
25MPa
DOWELS TO MATCH VERT.

W17 WALL ELEVATION
S3-03 1 : 100

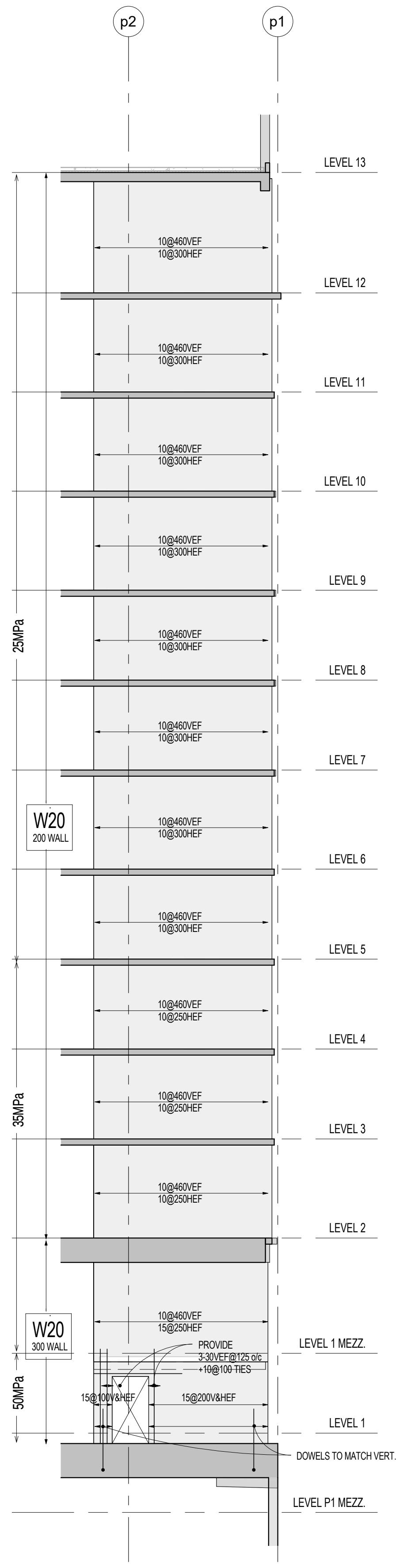
p2
p1
LEVEL 13
LEVEL 12
LEVEL 11
LEVEL 10
LEVEL 9
LEVEL 8
LEVEL 7
LEVEL 6
LEVEL 5
LEVEL 4
LEVEL 3
LEVEL 2
LEVEL 1 MEZZ.
LEVEL 1
LEVEL P1 MEZZ.
W20
200 WALL
W20
300 WALL
25MPa
35MPa
50MPa
DOWELS TO MATCH VERT.

W20 WALL ELEVATION
S3-03 1 : 100

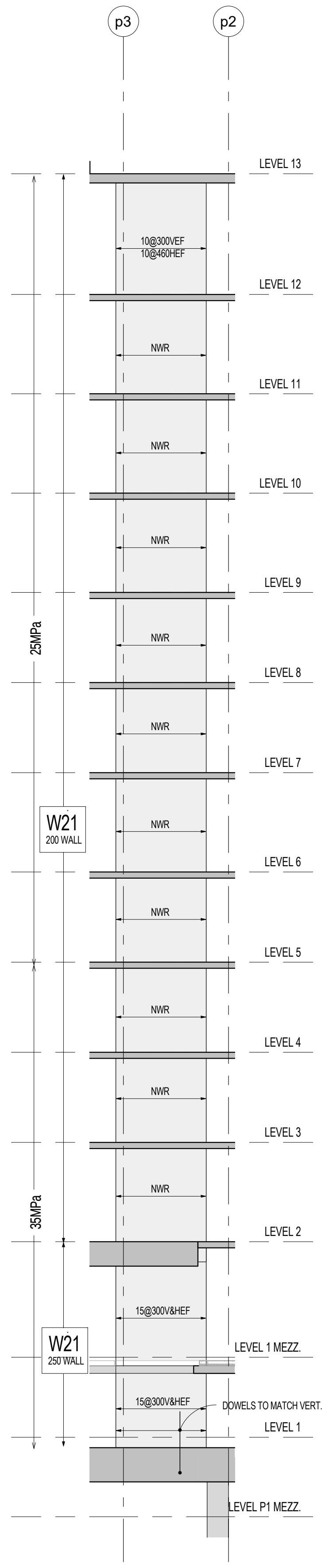
p3
p2
LEVEL 13
LEVEL 12
LEVEL 11
LEVEL 10
LEVEL 9
LEVEL 8
LEVEL 7
LEVEL 6
LEVEL 5
LEVEL 4
LEVEL 3
LEVEL 2
LEVEL 1 MEZZ.
LEVEL 1
LEVEL P1 MEZZ.
W21
200 WALL
W21
250 WALL
25MPa
35MPa
NWR
DOWELS TO MATCH VERT.

W21 WALL ELEVATION
S3-03 1 : 100

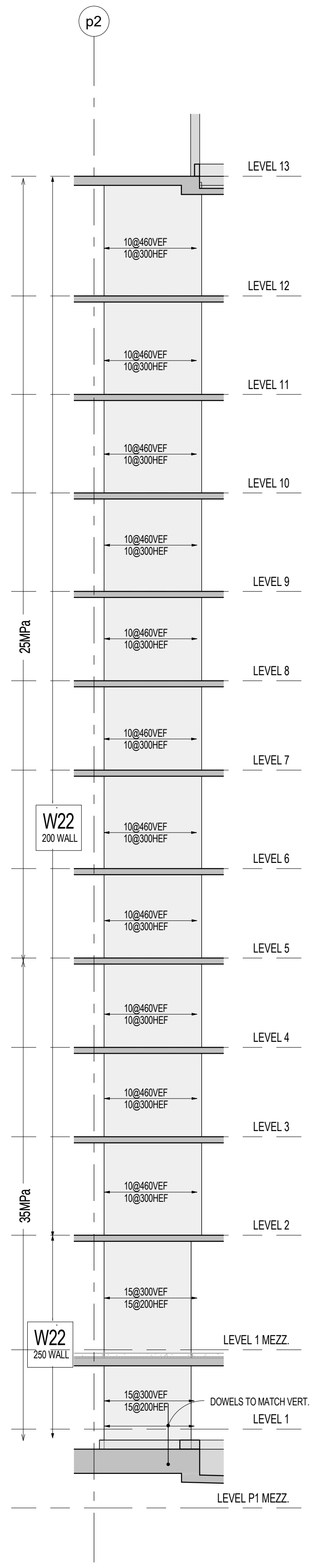
p2
LEVEL 13
LEVEL 12
LEVEL 11
LEVEL 10
LEVEL 9
LEVEL 8
LEVEL 7
LEVEL 6
LEVEL 5
LEVEL 4
LEVEL 3
LEVEL 2
LEVEL 1 MEZZ.
LEVEL 1
LEVEL P1 MEZZ.
W22
200 WALL
W22
250 WALL
25MPa
35MPa
DOWELS TO MATCH VERT.

W22 WALL ELEVATION
S3-03 1 : 100

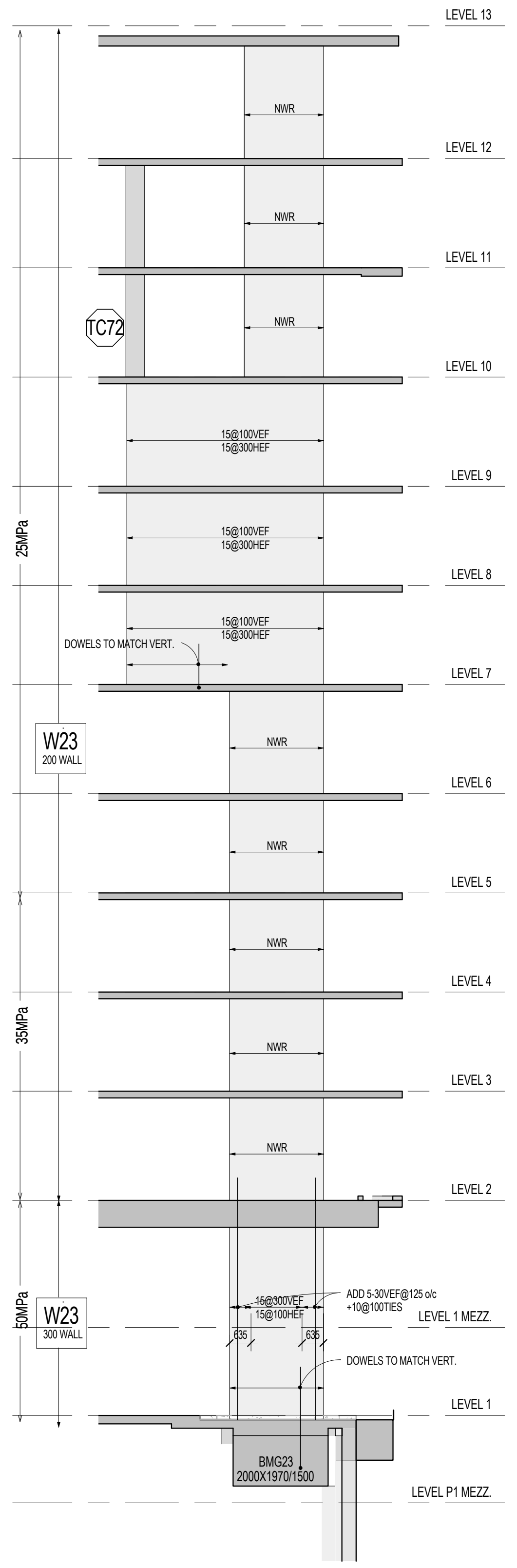
LEVEL 13
LEVEL 12
LEVEL 11
LEVEL 10
LEVEL 9
LEVEL 8
LEVEL 7
LEVEL 6
LEVEL 5
LEVEL 4
LEVEL 3
LEVEL 2
LEVEL 1 MEZZ.
LEVEL 1
LEVEL P1 MEZZ.
TC72
W23
200 WALL
W23
300 WALL
25MPa
35MPa
50MPa
NWR
DOWELS TO MATCH VERT.

W23 WALL ELEVATION
S3-03 1 : 100

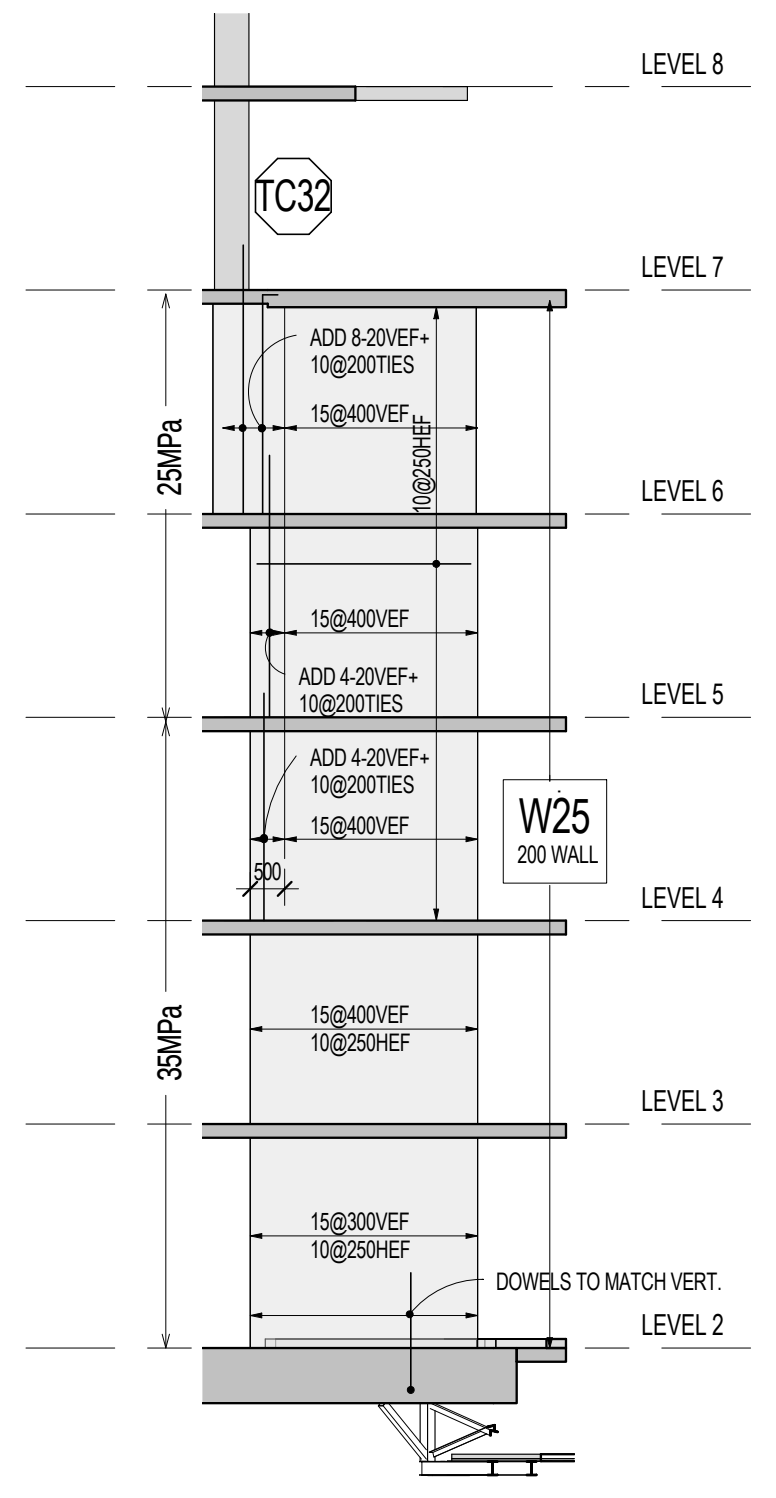
LEVEL 8
LEVEL 7
LEVEL 6
LEVEL 5
LEVEL 4
LEVEL 3
LEVEL 2
TC32
W25
200 WALL
25MPa
35MPa
DOWELS TO MATCH VERT.

W25 WALL ELEVATION
S3-03 1 : 100

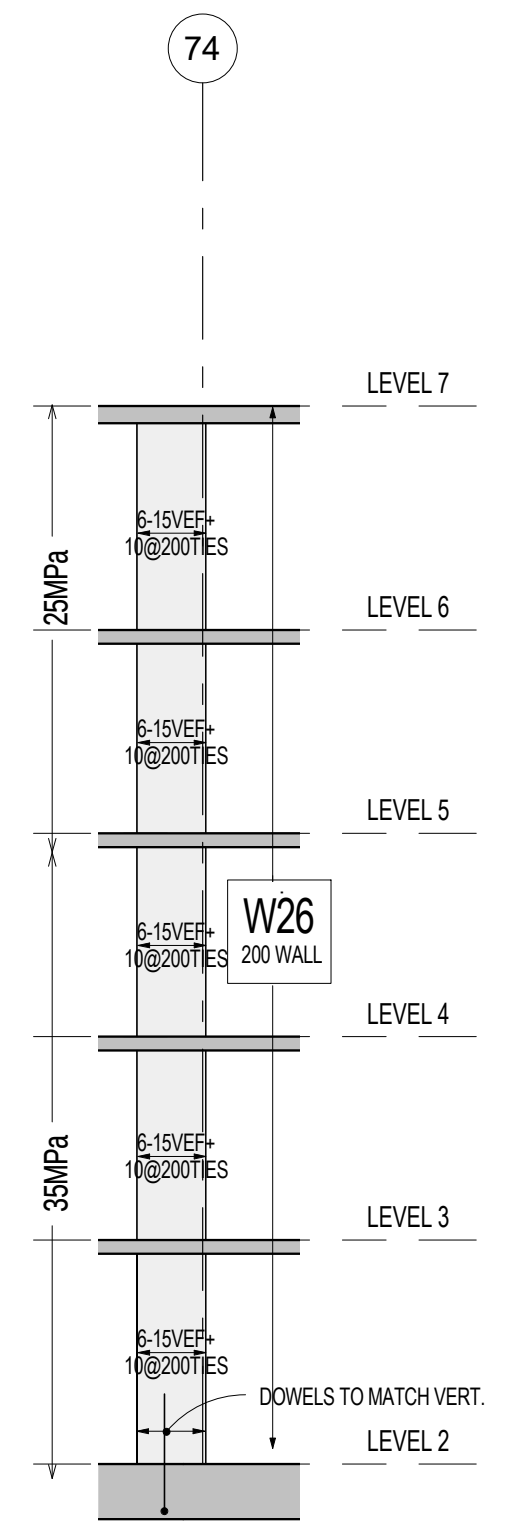
74
LEVEL 7
LEVEL 6
LEVEL 5
LEVEL 4
LEVEL 3
LEVEL 2
W26
200 WALL
25MPa
35MPa
DOWELS TO MATCH VERT.

W26 WALL ELEVATION
S3-03 1 : 100

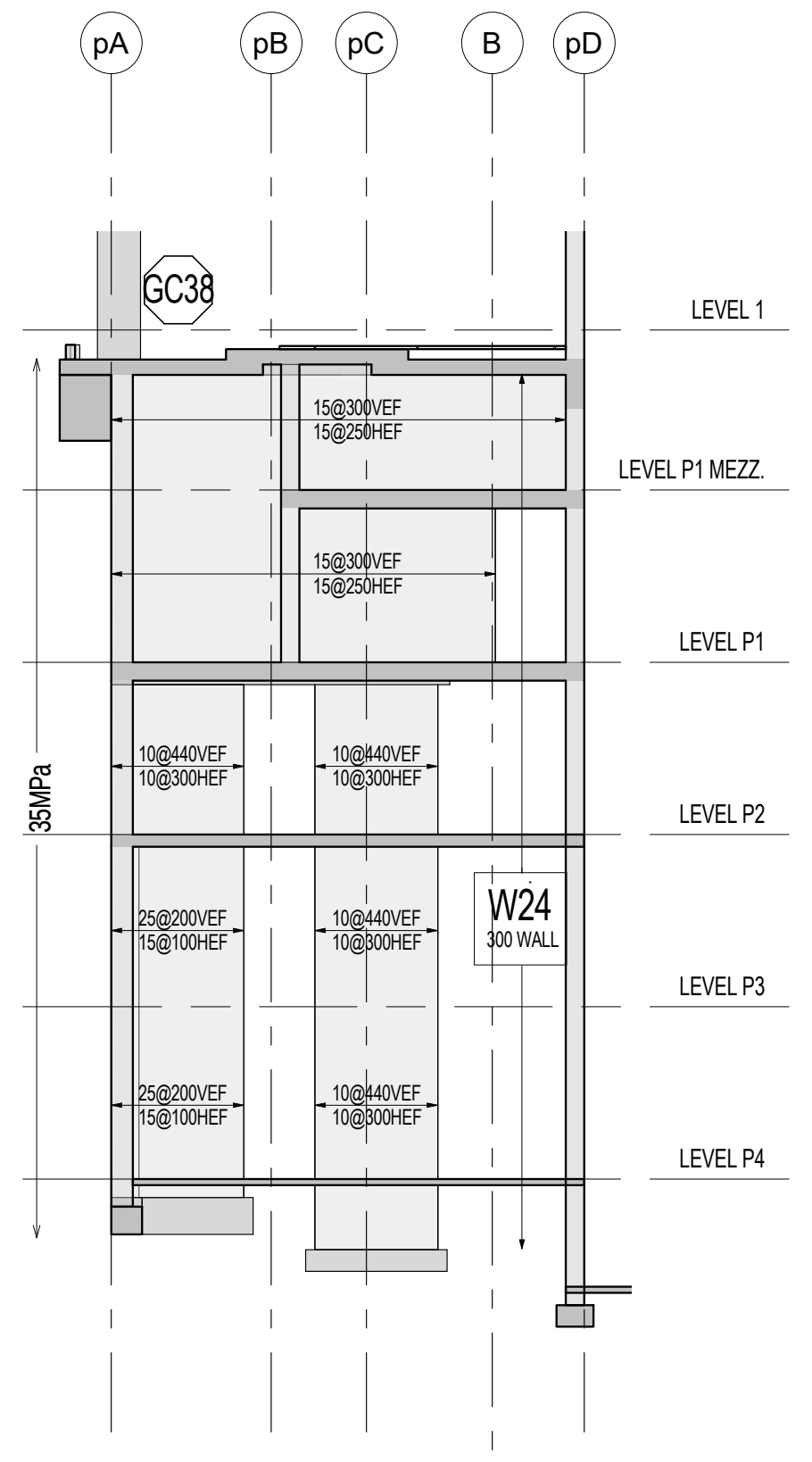
pA
pB
pC
B
pD
GC38
LEVEL 1
LEVEL P1 MEZZ.
LEVEL P1
LEVEL P2
LEVEL P3
LEVEL P4
W24
300 WALL
35MPa

W24 WALL ELEVATION
S3-03 1 : 100

REFER TO NOTES ON SHEET S3-01

Contractor Must Check And Verify All Dimensions On The Job.

Do Not Scale The Drawings.

All Drawings, Specifications And Related Documents Are The Copyright Of The Architect And Must Be Returned Upon Request.

Reproduction Of Drawings, Specifications And Related Documents In Part Or Whole Is Forbidden Without The Architects Written Permission.

This Drawing Is Not To Be Used For Construction Until Signed ByThe Architect.

Date:

DEC.18,2015 DEC.18,2015

stephenson
ENGINEERING
2550 Victoria Park Ave. Suite 602
Toronto ON M2J 5A9 | Tel: (416) 635 9970
www.stephenson-eng.com | info@stephenson-eng.com

No	Revision	Date

No	Issued For	Date
7	ISSUED FOR STEEL TENDER	DEC.18,2015
4	BUILDING PERMIT RESUBMISSION	SEPT.21,2015
3	BUILDING PERMIT RESUBMISSION	JULY 22,2015
2	BUILDING PERMIT SUBMISSION	JUNE 12,2015
1	ISSUED FOR WT REVIEW	MAY 01,2015

AQUAVISTA
AT BAYSIDE TORONTO

Drawing Title
WALL ELEVATIONS

Project
Hines TRIDEL
AQUAVISTA
Block 3 - R3 & R4
Merchant's Whart
Toronto, ON

Scale
1 : 100
Drawn by
DC
Checked by
BK/BBS
Project No.
20140031
Date
DEC.18,2015
Drawing No.
S3-03

Plot Date: 3/9/2016 10:02:03 AM

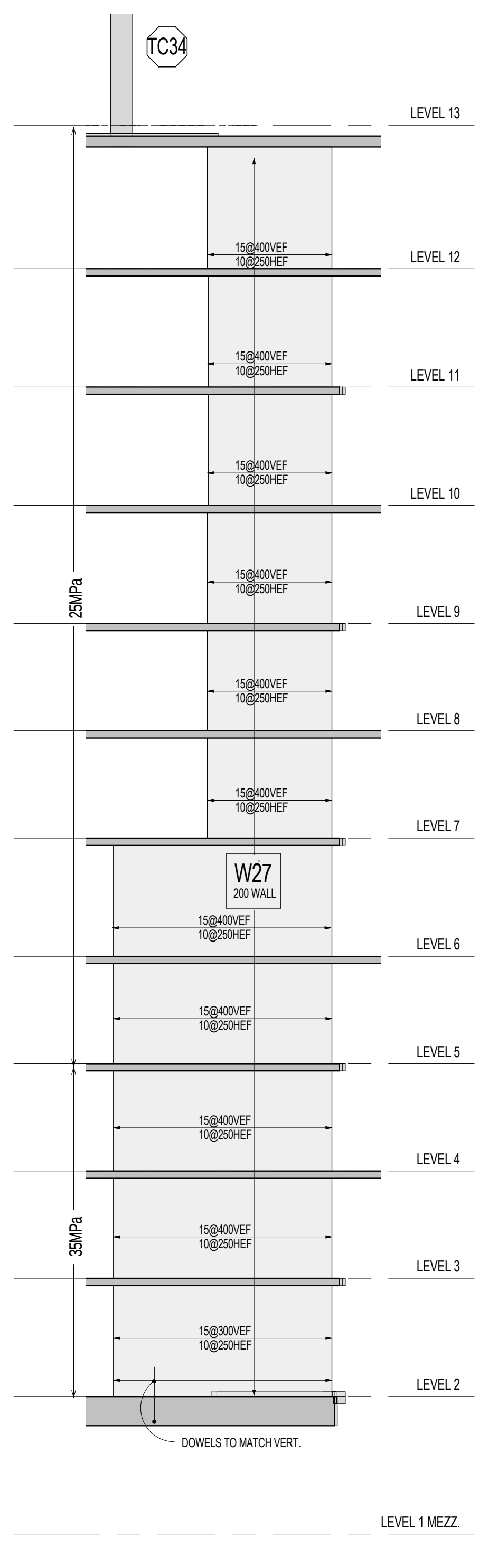
TC34
LEVEL 13
LEVEL 12
LEVEL 11
LEVEL 10
LEVEL 9
LEVEL 8
LEVEL 7
LEVEL 6
LEVEL 5
LEVEL 4
LEVEL 3
LEVEL 2
LEVEL 1 MEZZ.
25MPa
35MPa
15@400VEF
10@250HEF
15@300VEF
W27
200 WALL
DOWELS TO MATCH VERT.

W27 WALL ELEVATION
S3-04 1 : 100

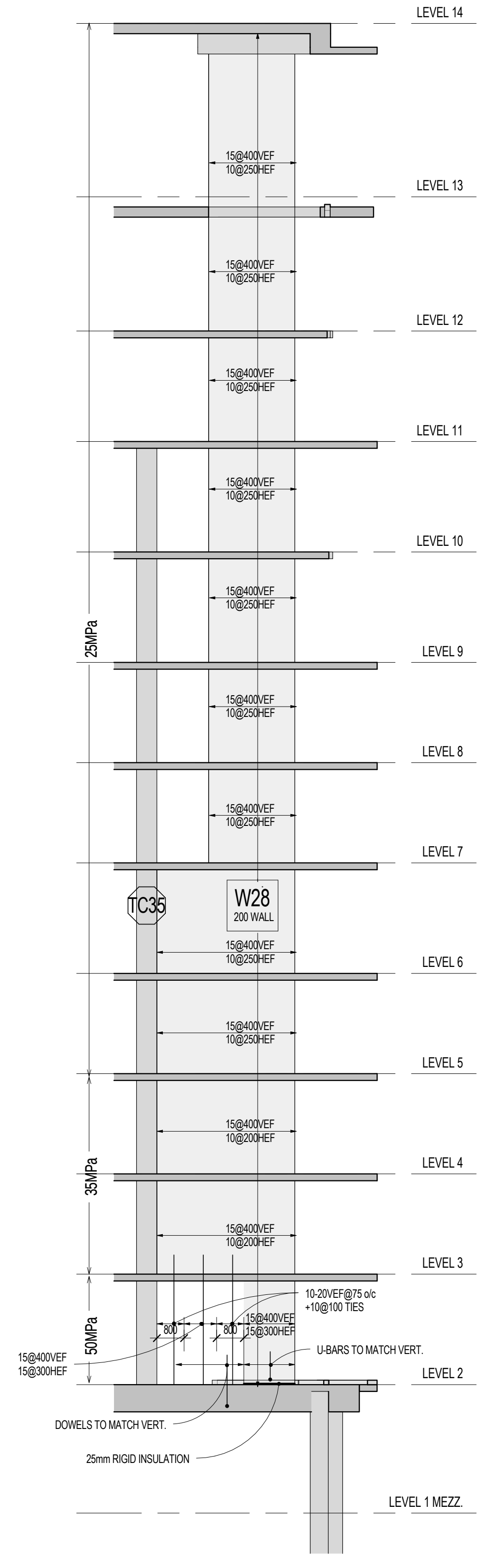
LEVEL 14
LEVEL 13
LEVEL 12
LEVEL 11
LEVEL 10
LEVEL 9
LEVEL 8
LEVEL 7
LEVEL 6
LEVEL 5
LEVEL 4
LEVEL 3
LEVEL 2
LEVEL 1 MEZZ.
TC35
W28
200 WALL
25MPa
35MPa
50MPa
15@400VEF
10@200HEF
10-20VEF@75 o/c
+10@100 TIES
800
800
15@400VEF
15@300HEF
U-BARS TO MATCH VERT.
DOWELS TO MATCH VERT.
25mm RIGID INSULATION

W28 WALL ELEVATION
S3-04 1 : 100

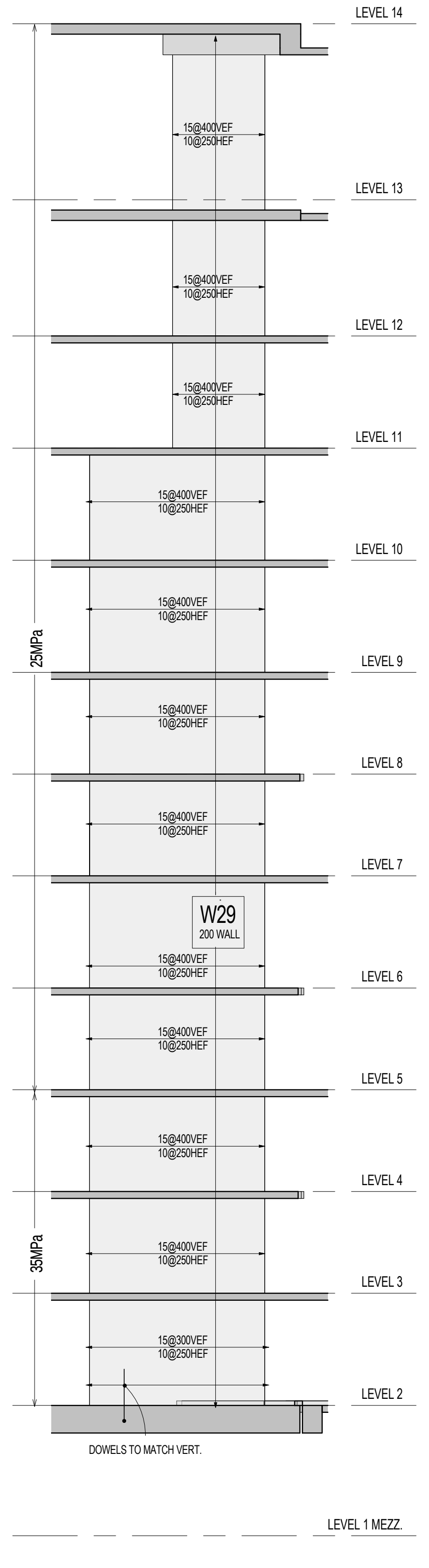
LEVEL 14
LEVEL 13
LEVEL 12
LEVEL 11
LEVEL 10
LEVEL 9
LEVEL 8
LEVEL 7
LEVEL 6
LEVEL 5
LEVEL 4
LEVEL 3
LEVEL 2
LEVEL 1 MEZZ.
W29
200 WALL
25MPa
35MPa
DOWELS TO MATCH VERT.

W29 WALL ELEVATION
S3-04 1 : 100

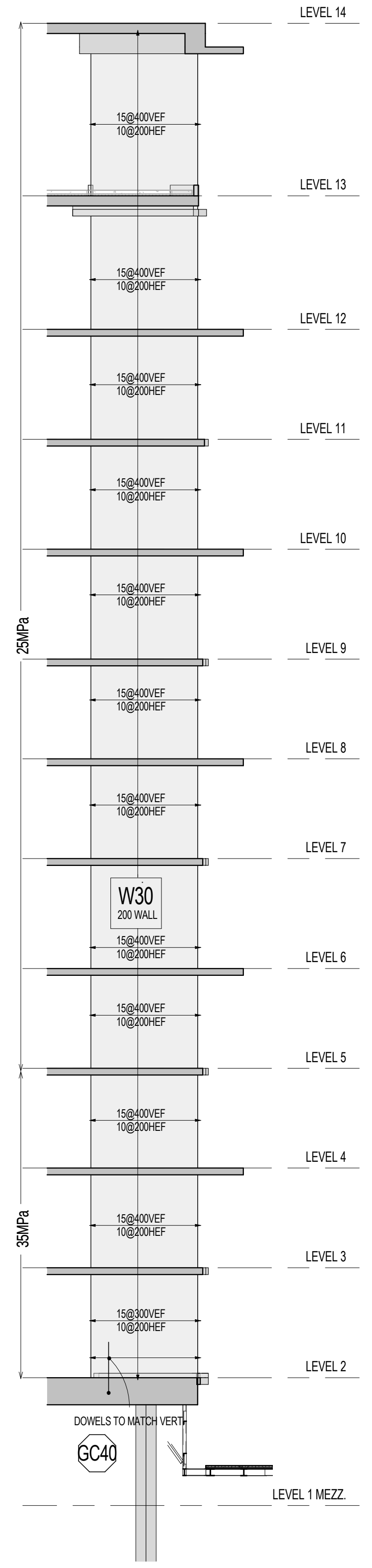
LEVEL 14
LEVEL 13
LEVEL 12
LEVEL 11
LEVEL 10
LEVEL 9
LEVEL 8
LEVEL 7
LEVEL 6
LEVEL 5
LEVEL 4
LEVEL 3
LEVEL 2
LEVEL 1 MEZZ.
W30
200 WALL
25MPa
35MPa
DOWELS TO MATCH VERT.
GC40

W30 WALL ELEVATION
S3-04 1 : 100

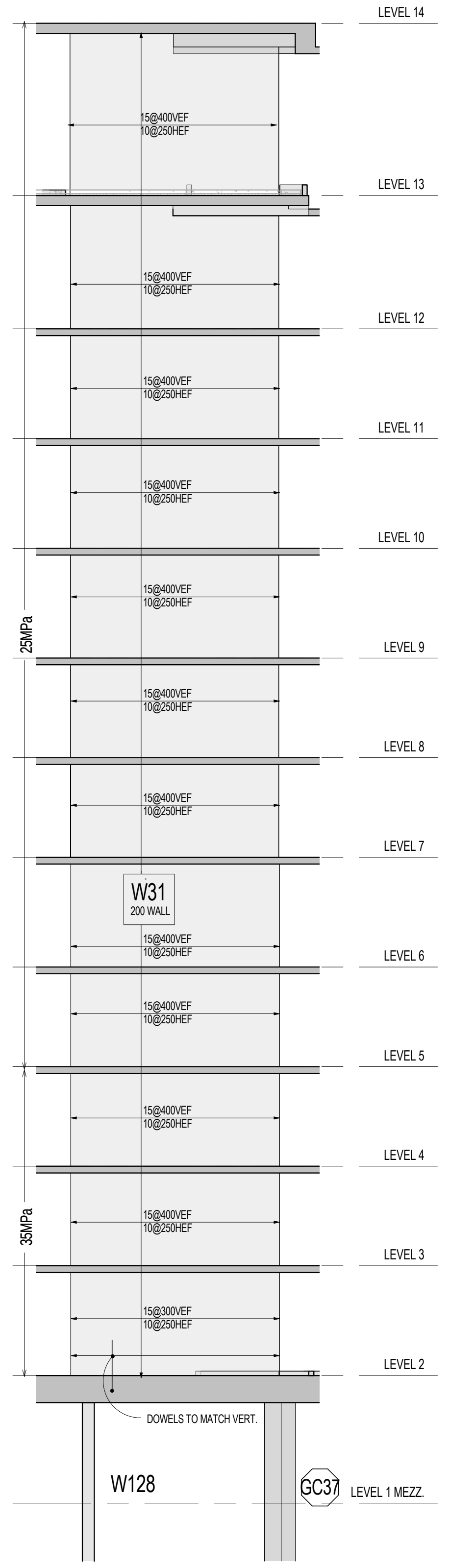
LEVEL 14
LEVEL 13
LEVEL 12
LEVEL 11
LEVEL 10
LEVEL 9
LEVEL 8
LEVEL 7
LEVEL 6
LEVEL 5
LEVEL 4
LEVEL 3
LEVEL 2
LEVEL 1 MEZZ.
W31
200 WALL
25MPa
35MPa
DOWELS TO MATCH VERT.
W128
GC37

W31 WALL ELEVATION
S3-04 1 : 100

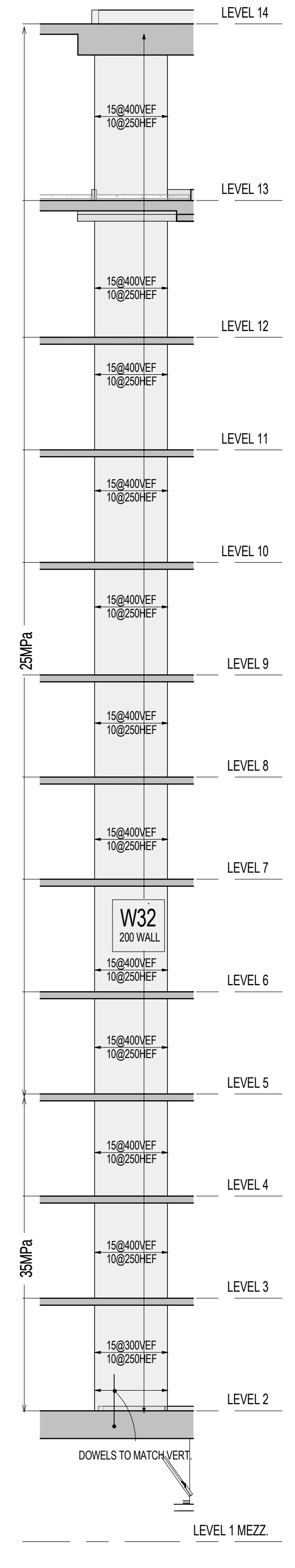
LEVEL 14
LEVEL 13
LEVEL 12
LEVEL 11
LEVEL 10
LEVEL 9
LEVEL 8
LEVEL 7
LEVEL 6
LEVEL 5
LEVEL 4
LEVEL 3
LEVEL 2
LEVEL 1 MEZZ.
W32
200 WALL
25MPa
35MPa
DOWELS TO MATCH VERT.

W32 WALL ELEVATION
S3-04 1 : 100

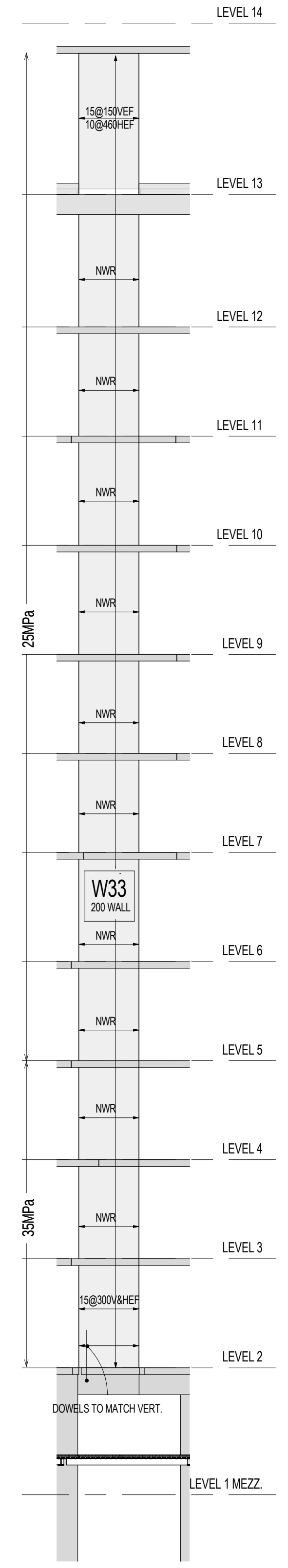
LEVEL 14
LEVEL 13
LEVEL 12
LEVEL 11
LEVEL 10
LEVEL 9
LEVEL 8
LEVEL 7
LEVEL 6
LEVEL 5
LEVEL 4
LEVEL 3
LEVEL 2
LEVEL 1 MEZZ.
W33
200 WALL
NWR
25MPa
35MPa
DOWELS TO MATCH VERT.

W33 WALL ELEVATION
S3-04 1 : 100

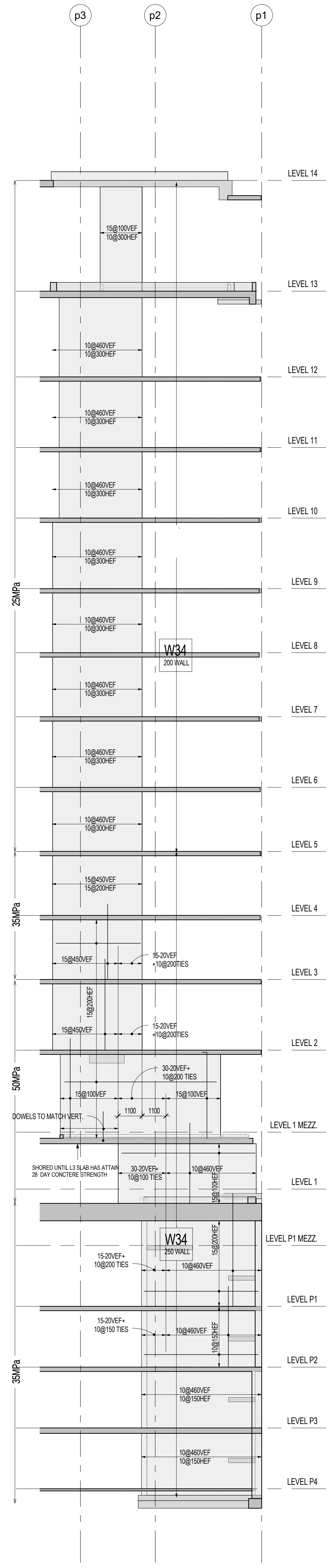
p3
p2
p1
LEVEL 14
LEVEL 13
LEVEL 12
LEVEL 11
LEVEL 10
LEVEL 9
LEVEL 8
LEVEL 7
LEVEL 6
LEVEL 5
LEVEL 4
LEVEL 3
LEVEL 2
LEVEL 1 MEZZ.
LEVEL 1
LEVEL P1 MEZZ.
LEVEL P1
LEVEL P2
LEVEL P3
LEVEL P4
W34
200 WALL
25MPa
35MPa
50MPa
35MPa
15@450VEF
15@200HEF
15-20VEF
+10@200TIES
30-20VEF+
10@200 TIES
15@100VEF
1100
1100
DOWELS TO MATCH VERT.
SHORED UNTIL L3 SLAB HAS ATTAIN
28 DAY CONCTERE STRENGTH
30-20VEF+
10@100 TIES
10@460VEF
15@100HEF
W34
250 WALL
15@200HEF
15-20VEF+
10@200 TIES
15-20VEF+
10@150 TIES
10@150HEF
10@460VEF
10@150HEF

W34 WALL ELEVATION
S3-04 1 : 100

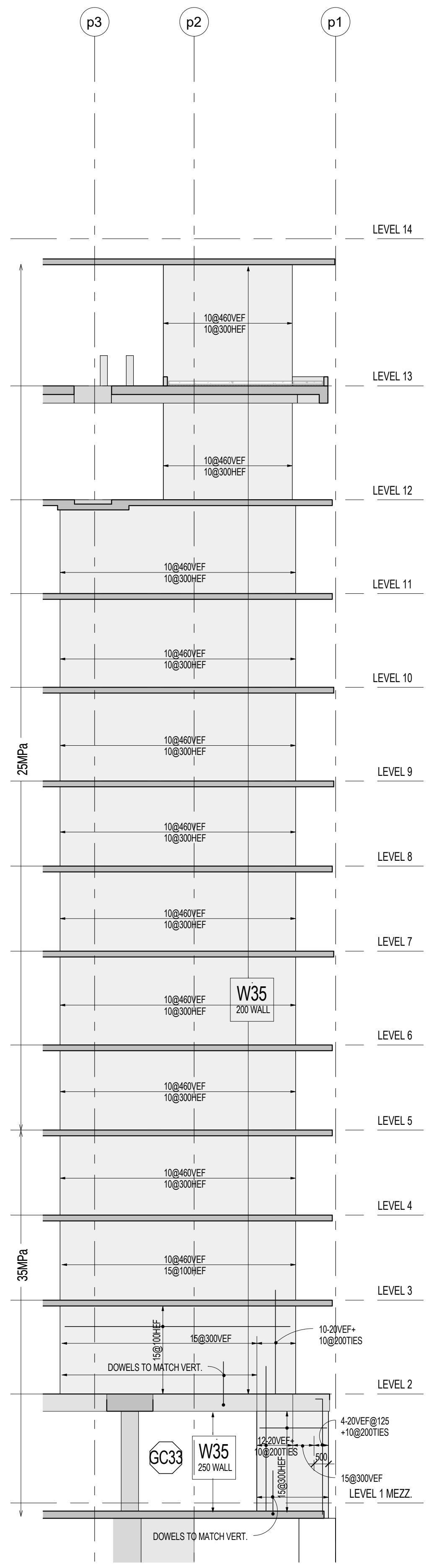
p3
p2
p1
LEVEL 14
LEVEL 13
LEVEL 12
LEVEL 11
LEVEL 10
LEVEL 9
LEVEL 8
LEVEL 7
LEVEL 6
LEVEL 5
LEVEL 4
LEVEL 3
LEVEL 2
LEVEL 1 MEZZ.
25MPa
35MPa
W35
200 WALL
10@460VEF
10@300HEF
15@100HEF
15@300VEF
10-20VEF+
10@200TIES
DOWELS TO MATCH VERT.
GC33
W35
250 WALL
12-20VEF+
10@200TIES
4-20VEF@125
+10@200TIES
500
15@300VEF
15@300HEF
DOWELS TO MATCH VERT.

W35 WALL ELEVATION
S3-04 1 : 100

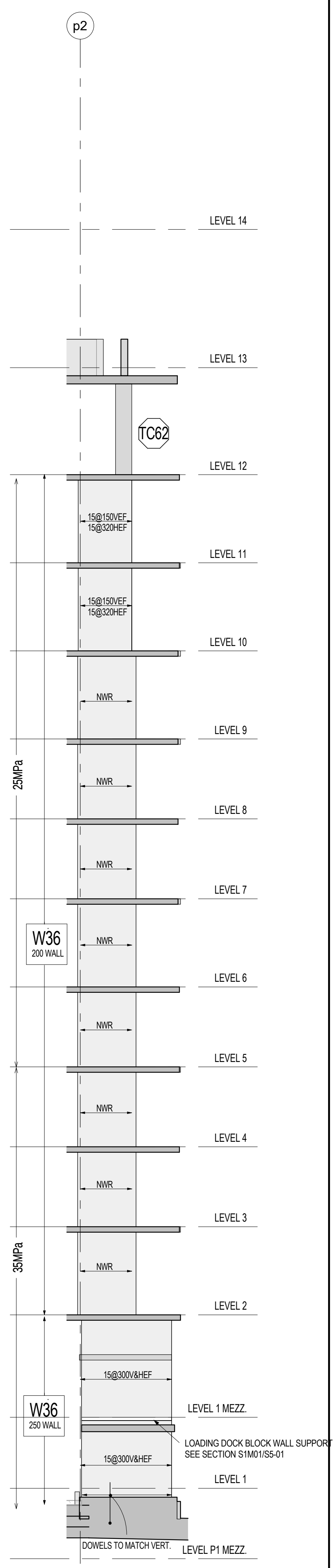
p2
LEVEL 14
LEVEL 13
TC62
LEVEL 12
LEVEL 11
LEVEL 10
LEVEL 9
LEVEL 8
LEVEL 7
LEVEL 6
LEVEL 5
LEVEL 4
LEVEL 3
LEVEL 2
LEVEL 1 MEZZ.
LEVEL 1
LEVEL P1 MEZZ.
25MPa
35MPa
NWR
W36
200 WALL
W36
250 WALL
15@300V&HEF
LOADING DOCK BLOCK WALL SUPPORT
SEE SECTION S1M01/S5-01
DOWELS TO MATCH VERT.

W36 WALL ELEVATION
S3-04 1 : 100

REFER TO NOTES ON SHEET S3-01

Contractor Must Check And Verify All Dimensions On The Job.

Do Not Scale The Drawings.

All Drawings, Specifications And Related Documents Are The Copyright Of The Architect And Must Be Returned Upon Request.

Reproduction Of Drawings, Specifications And Related Documents In Part Or Whole Is Forbidden Without The Architects Written Permission.

This Drawing Is Not To Be Used For Construction Until Signed ByThe Architect.

Date:

DEC.18,2015 DEC.18,2015

stephenson
ENGINEERING
2550 Victoria Park Ave. Suite 602
Toronto ON M2J 5A9 | Tel: (416) 635 9970
www.stephenson-eng.com | info@stephenson-eng.com

No	Revision	Date

No	Issued For	Date
7	ISSUED FOR STEEL TENDER	DEC.18,2015
4	BUILDING PERMIT RESUBMISSION	SEPT.21,2015
3	BUILDING PERMIT RESUBMISSION	JULY 22,2015
2	BUILDING PERMIT SUBMISSION	JUNE 12,2015
1	ISSUED FOR WT REVIEW	MAY 01,2015

AQUAVISTA
AT BAYSIDE TORONTO

Drawing Title
WALL ELEVATIONS

Project
Hines TRIDEL
AQUAVISTA
Block 3 - R3 & R4
Merchant's Whart
Toronto, ON

Scale
1 : 100
Drawn by
DC
Checked by
BK/BBS
Project No.
20140031
Date
DEC.18,2015
Drawing No.
S3-04

Plot Date: 3/9/2016 10:02:07 AM

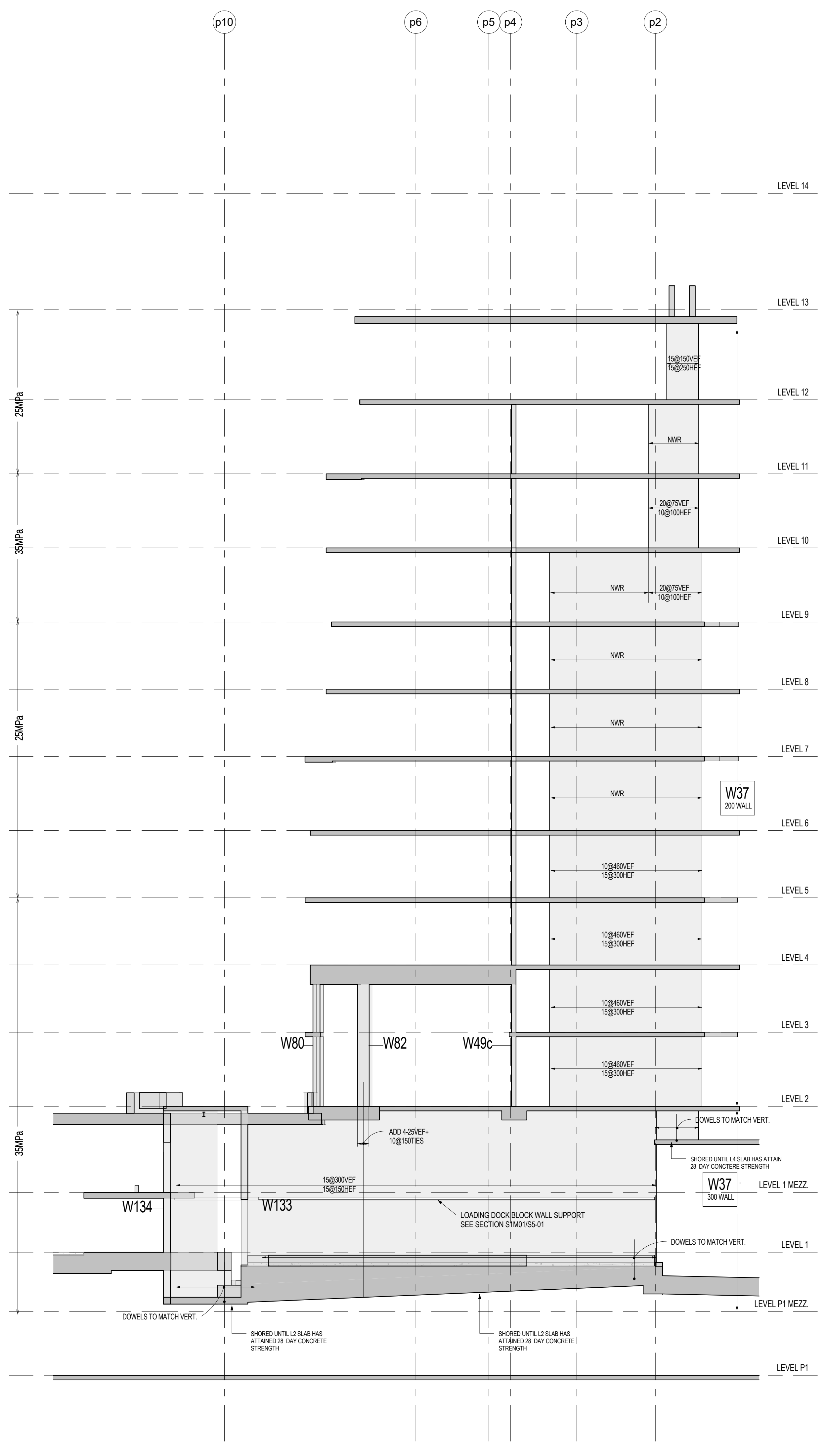
p10
p6
p5
p4
p3
p2
LEVEL 14
LEVEL 13
LEVEL 12
LEVEL 11
LEVEL 10
LEVEL 9
LEVEL 8
LEVEL 7
LEVEL 6
LEVEL 5
LEVEL 4
LEVEL 3
LEVEL 2
LEVEL 1 MEZZ.
LEVEL 1
LEVEL P1 MEZZ.
LEVEL P1
25MPa
35MPa
NMR
10@460VEF
15@300HEF
W37
200 WALL
W80
W82
W49c
W134
W133
ADD 4-25VEF+
10@150TIES
15@300VEF
15@150HEF
LOADING DOCK BLOCK WALL SUPPORT
SEE SECTION S1M01/S5-01
DOWELS TO MATCH VERT.
SHORED UNTIL L4 SLAB HAS ATTAIN
28 DAY CONCTERE STRENGTH
W37
300 WALL
SHORED UNTIL L2 SLAB HAS
ATTAINED 28 DAY CONCRETE
STRENGTH

W37 WALL ELEVATION
S3-05 1 : 100

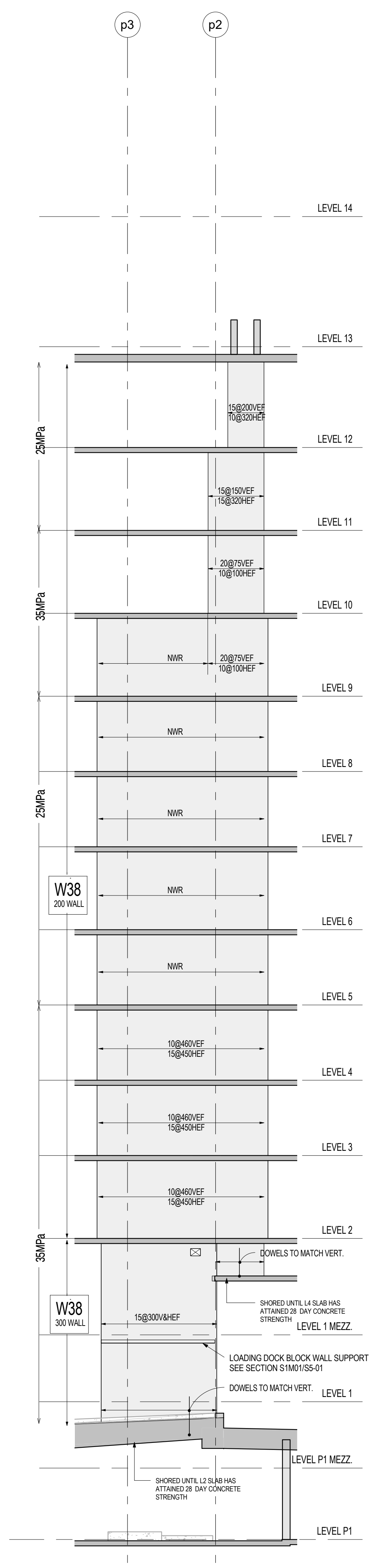
p3
p2
LEVEL 14
LEVEL 13
LEVEL 12
LEVEL 11
LEVEL 10
LEVEL 9
LEVEL 8
LEVEL 7
LEVEL 6
LEVEL 5
LEVEL 4
LEVEL 3
LEVEL 2
LEVEL 1 MEZZ.
LEVEL 1
LEVEL P1 MEZZ.
LEVEL P1
25MPa
35MPa
NMR
W38
200 WALL
W38
300 WALL
DOWELS TO MATCH VERT.
LOADING DOCK BLOCK WALL SUPPORT
SEE SECTION S1M01/S5-01

W38 WALL ELEVATION
S3-05 1 : 100

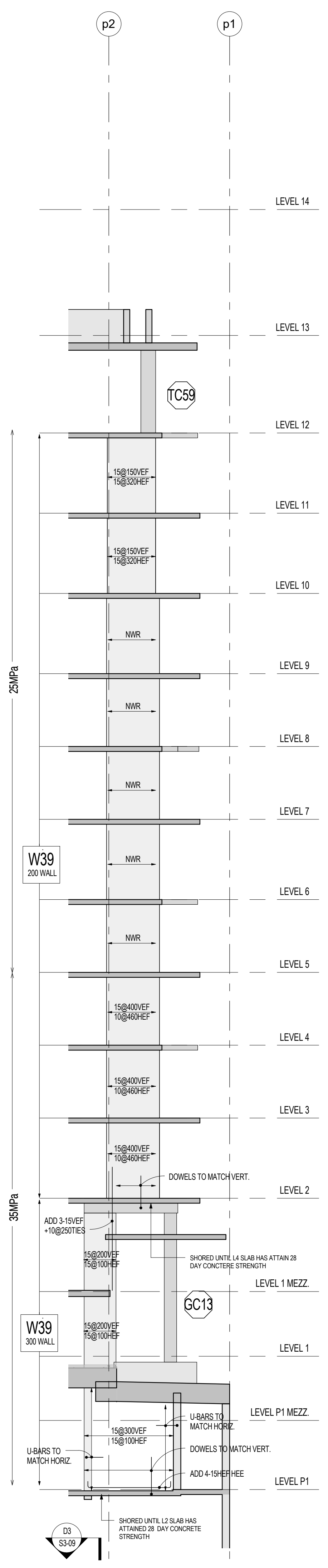
p2
p1
TC59
GC13
W39
200 WALL
W39
300 WALL
LEVEL 14
LEVEL 13
LEVEL 12
LEVEL 11
LEVEL 10
LEVEL 9
LEVEL 8
LEVEL 7
LEVEL 6
LEVEL 5
LEVEL 4
LEVEL 3
LEVEL 2
LEVEL 1 MEZZ.
LEVEL 1
LEVEL P1 MEZZ.
LEVEL P1
25MPa
35MPa
NMR
DOWELS TO MATCH VERT.
U-BARS TO MATCH HORIZ.

W39 WALL ELEVATION
S3-05 1 : 100

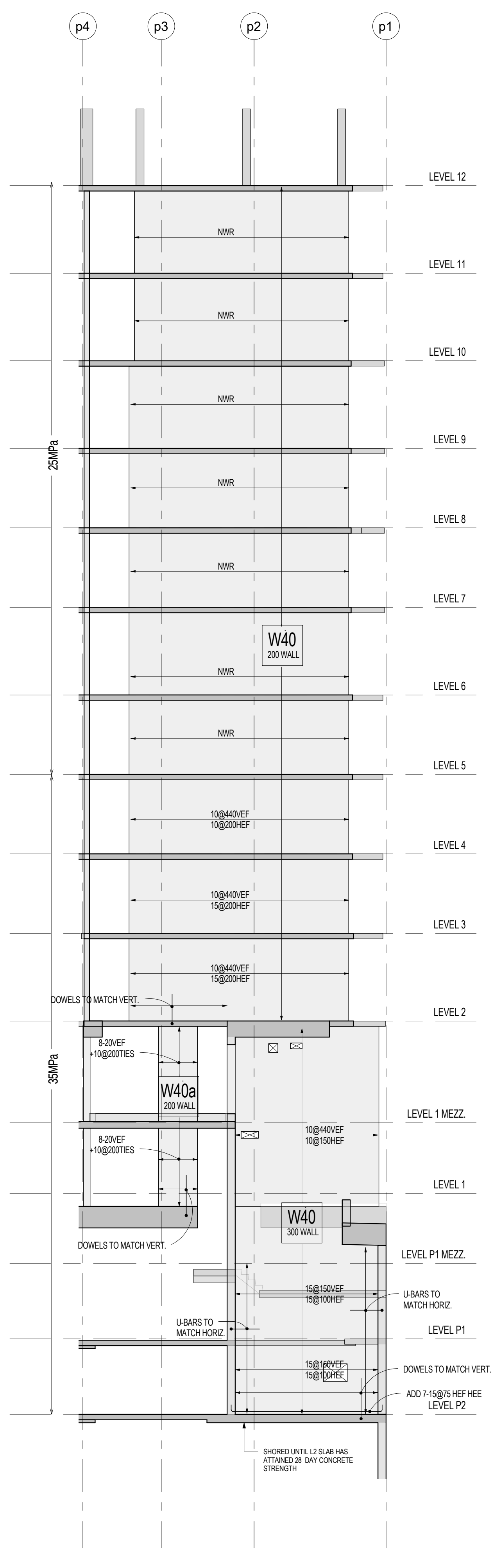
p4
p3
p2
p1
W40
200 WALL
W40a
200 WALL
W40
300 WALL
LEVEL 12
LEVEL 11
LEVEL 10
LEVEL 9
LEVEL 8
LEVEL 7
LEVEL 6
LEVEL 5
LEVEL 4
LEVEL 3
LEVEL 2
LEVEL 1 MEZZ.
LEVEL 1
LEVEL P1 MEZZ.
LEVEL P1
LEVEL P2
25MPa
35MPa
NMR
DOWELS TO MATCH VERT.
U-BARS TO MATCH HORIZ.

W40 WALL ELEVATION
S3-05 1 : 100

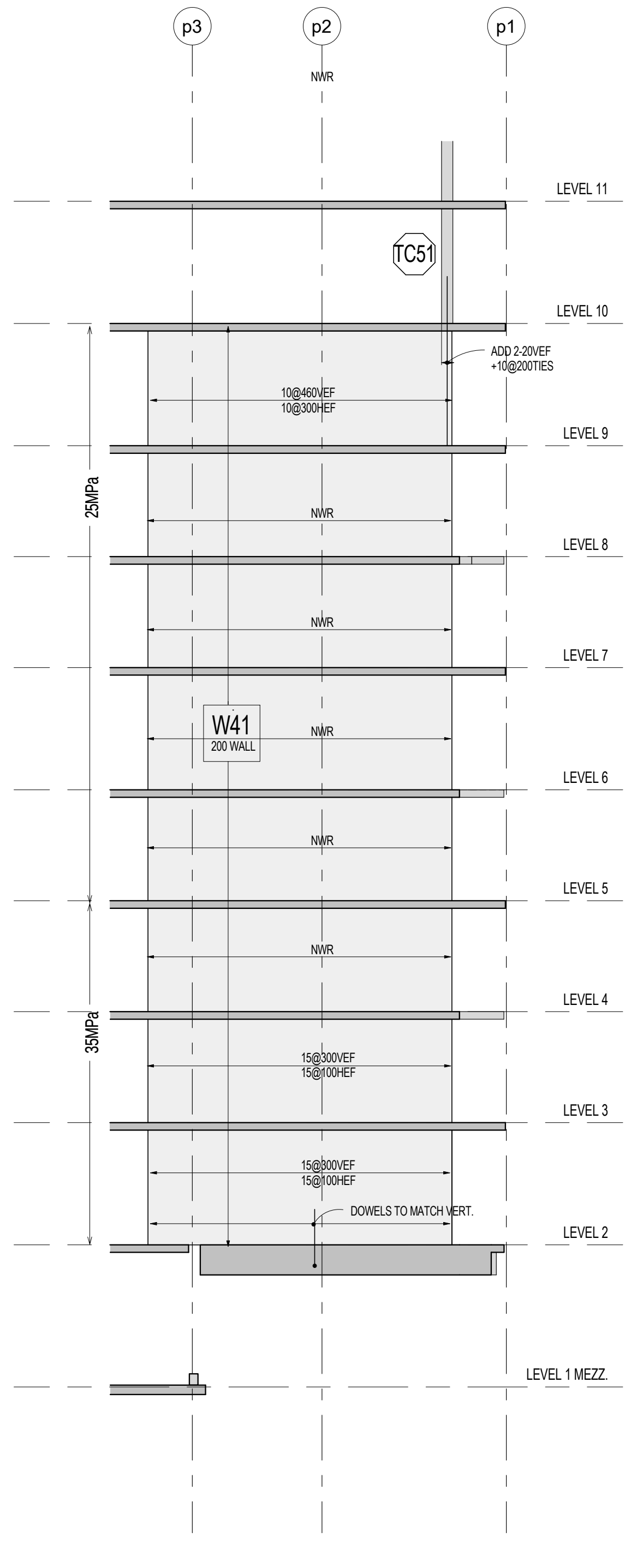
p3
p2
p1
TC51
W41
200 WALL
LEVEL 11
LEVEL 10
LEVEL 9
LEVEL 8
LEVEL 7
LEVEL 6
LEVEL 5
LEVEL 4
LEVEL 3
LEVEL 2
LEVEL 1 MEZZ.
35MPa
NMR
DOWELS TO MATCH VERT.

W41 WALL ELEVATION
S3-05 1 : 100

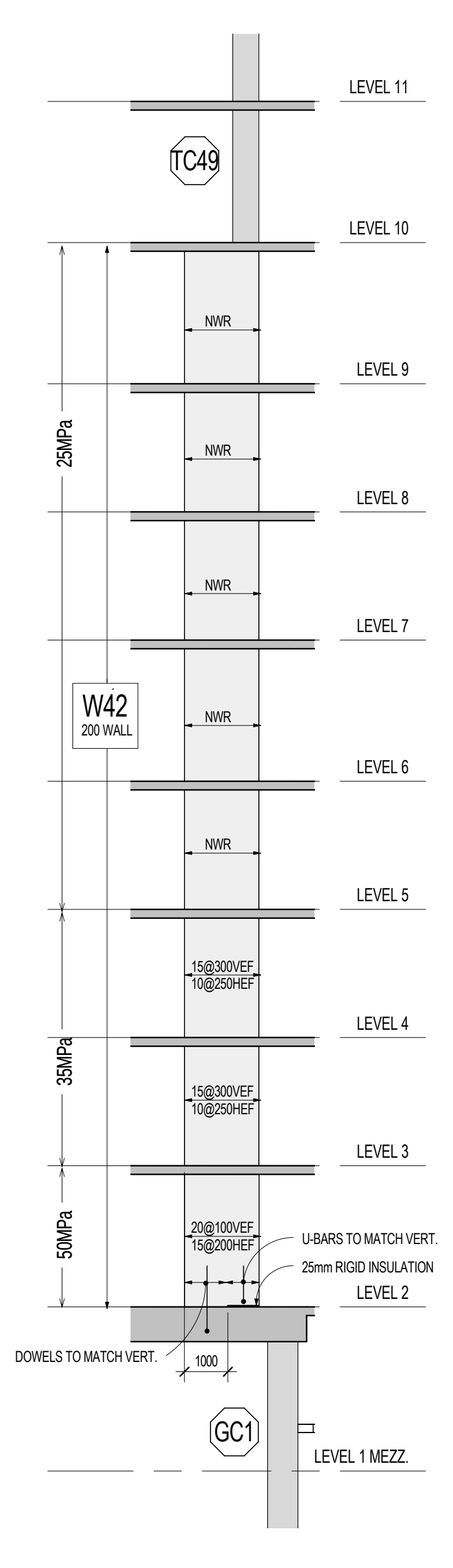
TC49
GC1
W42
200 WALL
LEVEL 11
LEVEL 10
LEVEL 9
LEVEL 8
LEVEL 7
LEVEL 6
LEVEL 5
LEVEL 4
LEVEL 3
LEVEL 2
LEVEL 1 MEZZ.
25MPa
35MPa
50MPa
U-BARS TO MATCH VERT.
25mm RIGID INSULATION
DOWELS TO MATCH VERT.

W42 WALL ELEVATION
S3-05 1 : 100

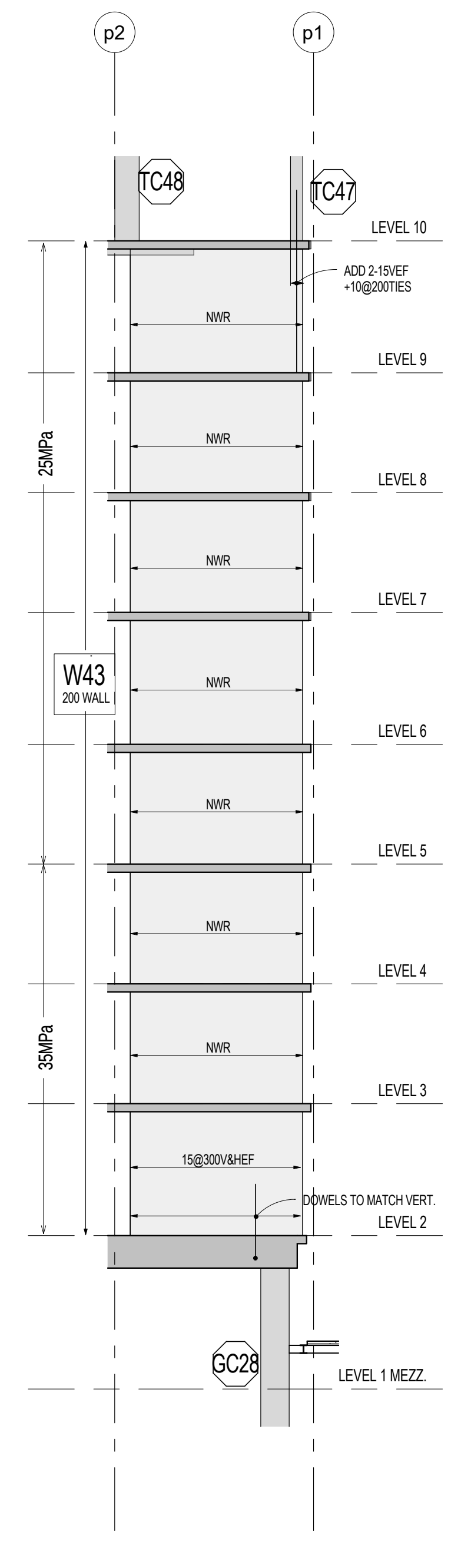
p2
p1
TC48
TC47
GC28
W43
200 WALL
LEVEL 10
LEVEL 9
LEVEL 8
LEVEL 7
LEVEL 6
LEVEL 5
LEVEL 4
LEVEL 3
LEVEL 2
LEVEL 1 MEZZ.
25MPa
35MPa
NMR
DOWELS TO MATCH VERT.

W43 WALL ELEVATION
S3-05 1 : 100

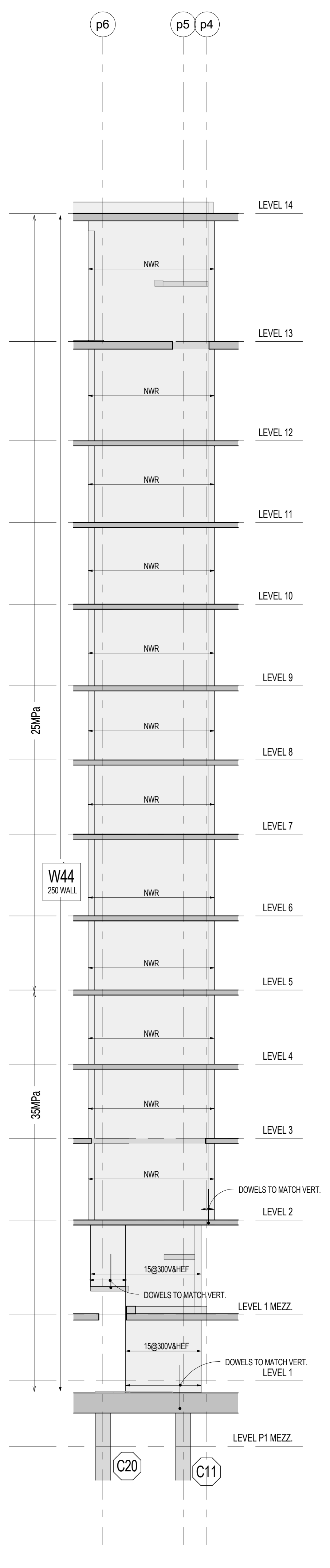
p6
p5
p4
W44
250 WALL
C20
C11
LEVEL 14
LEVEL 13
LEVEL 12
LEVEL 11
LEVEL 10
LEVEL 9
LEVEL 8
LEVEL 7
LEVEL 6
LEVEL 5
LEVEL 4
LEVEL 3
LEVEL 2
LEVEL 1 MEZZ.
LEVEL 1
LEVEL P1 MEZZ.
25MPa
35MPa
NMR
DOWELS TO MATCH VERT.

W44 WALL ELEVATION
S3-05 1 : 100

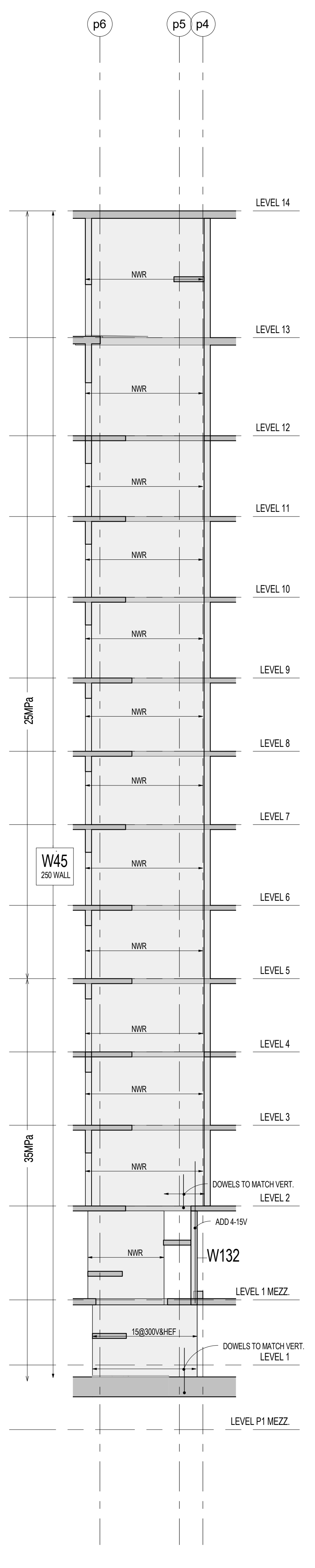
p6
p5
p4
W45
250 WALL
W132
LEVEL 14
LEVEL 13
LEVEL 12
LEVEL 11
LEVEL 10
LEVEL 9
LEVEL 8
LEVEL 7
LEVEL 6
LEVEL 5
LEVEL 4
LEVEL 3
LEVEL 2
LEVEL 1 MEZZ.
LEVEL 1
LEVEL P1 MEZZ.
25MPa
35MPa
NMR
DOWELS TO MATCH VERT.

W45 WALL ELEVATION
S3-05 1 : 100

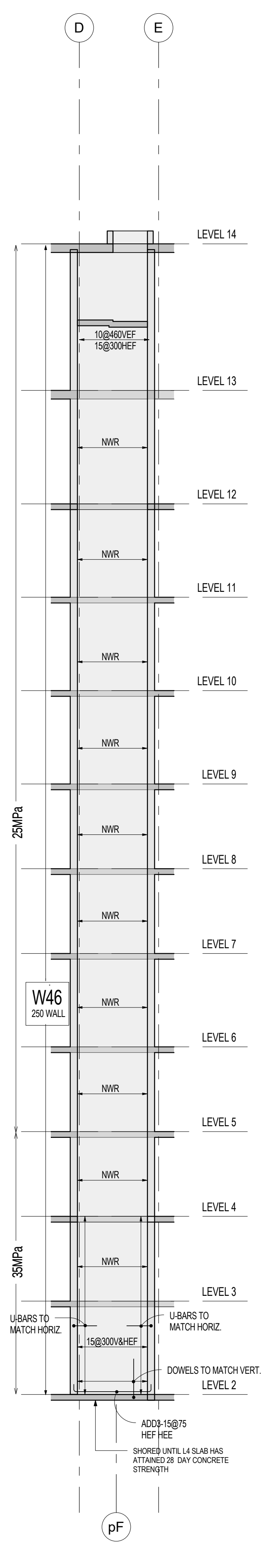
D
E
pF
W46
250 WALL
LEVEL 14
LEVEL 13
LEVEL 12
LEVEL 11
LEVEL 10
LEVEL 9
LEVEL 8
LEVEL 7
LEVEL 6
LEVEL 5
LEVEL 4
LEVEL 3
LEVEL 2
25MPa
U-BARS TO MATCH HORIZ.
DOWELS TO MATCH VERT.

W46 WALL ELEVATION
S3-05 1 : 100

REFER TO NOTES ON SHEET S3-01

Contractor Must Check And Verify All Dimensions On The Job.

Do Not Scale The Drawings.

All Drawings, Specifications And Related Documents Are The Copyright Of The Architect And Must Be Returned Upon Request.

Reproduction Of Drawings, Specifications And Related Documents In Part Or Whole Is Forbidden Without The Architects Written Permission.

This Drawing Is Not To Be Used For Construction Until Signed ByThe Architect.

Date:

DEC.18,2015 DEC.18,2015

stephenson
ENGINEERING
2550 Victoria Park Ave. Suite 602
Toronto ON M2J 5A9 | Tel: (416) 635 9970
www.stephenson-eng.com | info@stephenson-eng.com

No	Revision	Date

No	Issued For	Date
7	ISSUED FOR STEEL TENDER	DEC.18,2015
4	BUILDING PERMIT RESUBMISSION	SEPT.21,2015
3	BUILDING PERMIT RESUBMISSION	JULY 22,2015
2	BUILDING PERMIT SUBMISSION	JUNE 12,2015
1	ISSUED FOR WT REVIEW	MAY 01,2015

AQUAVISTA
AT BAYSIDE TORONTO

Drawing Title
WALL ELEVATIONS

Project
Hines TRIDEL®
AQUAVISTA
Block 3 - R3 & R4
Merchant's Whart
Toronto, ON

Scale: 1 : 100
Drawn by: DC
Checked by: BK/BBS
Project No.: 20140031
Date: DEC.18,2015
Drawing No.: S3-05

Plot Date: 3/9/2016 10:02:11 AM

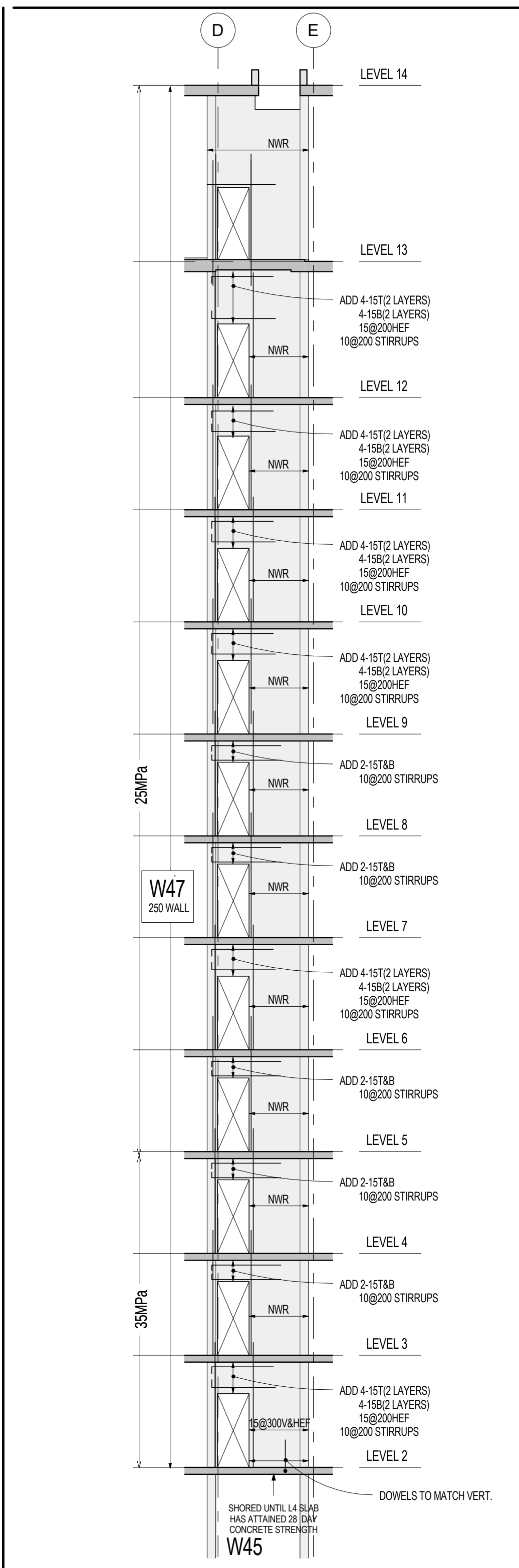
D
E
LEVEL 14
LEVEL 13
LEVEL 12
LEVEL 11
LEVEL 10
LEVEL 9
LEVEL 8
LEVEL 7
LEVEL 6
LEVEL 5
LEVEL 4
LEVEL 3
LEVEL 2
W47
200 WALL
W45
25MPa
35MPa
DOWELS TO MATCH VERT.

W47 WALL ELEVATION
S3-06 1 : 100

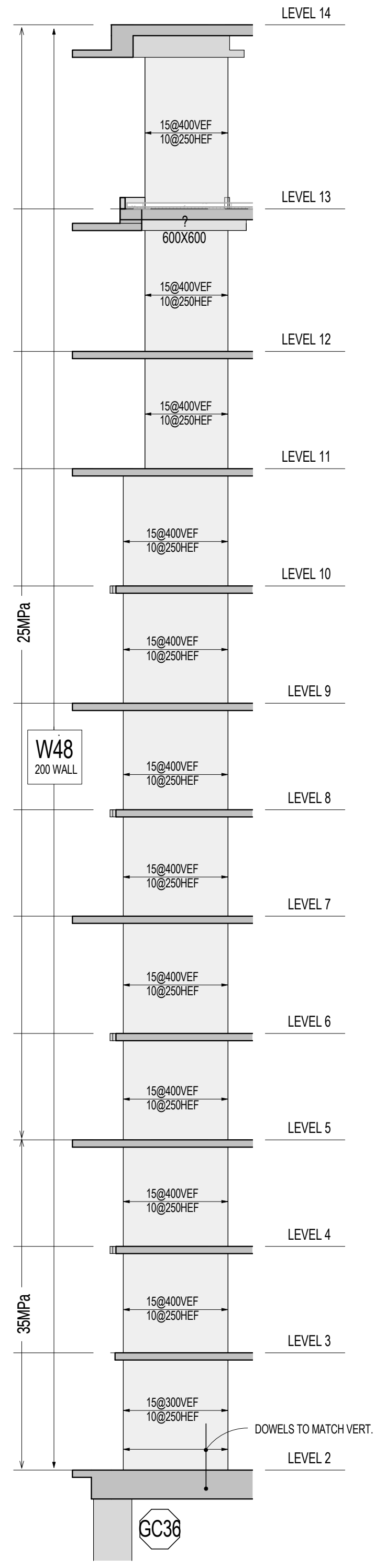
LEVEL 14
LEVEL 13
LEVEL 12
LEVEL 11
LEVEL 10
LEVEL 9
LEVEL 8
LEVEL 7
LEVEL 6
LEVEL 5
LEVEL 4
LEVEL 3
LEVEL 2
W48
200 WALL
GC36
DOWELS TO MATCH VERT.

W48 WALL ELEVATION
S3-06 1 : 100

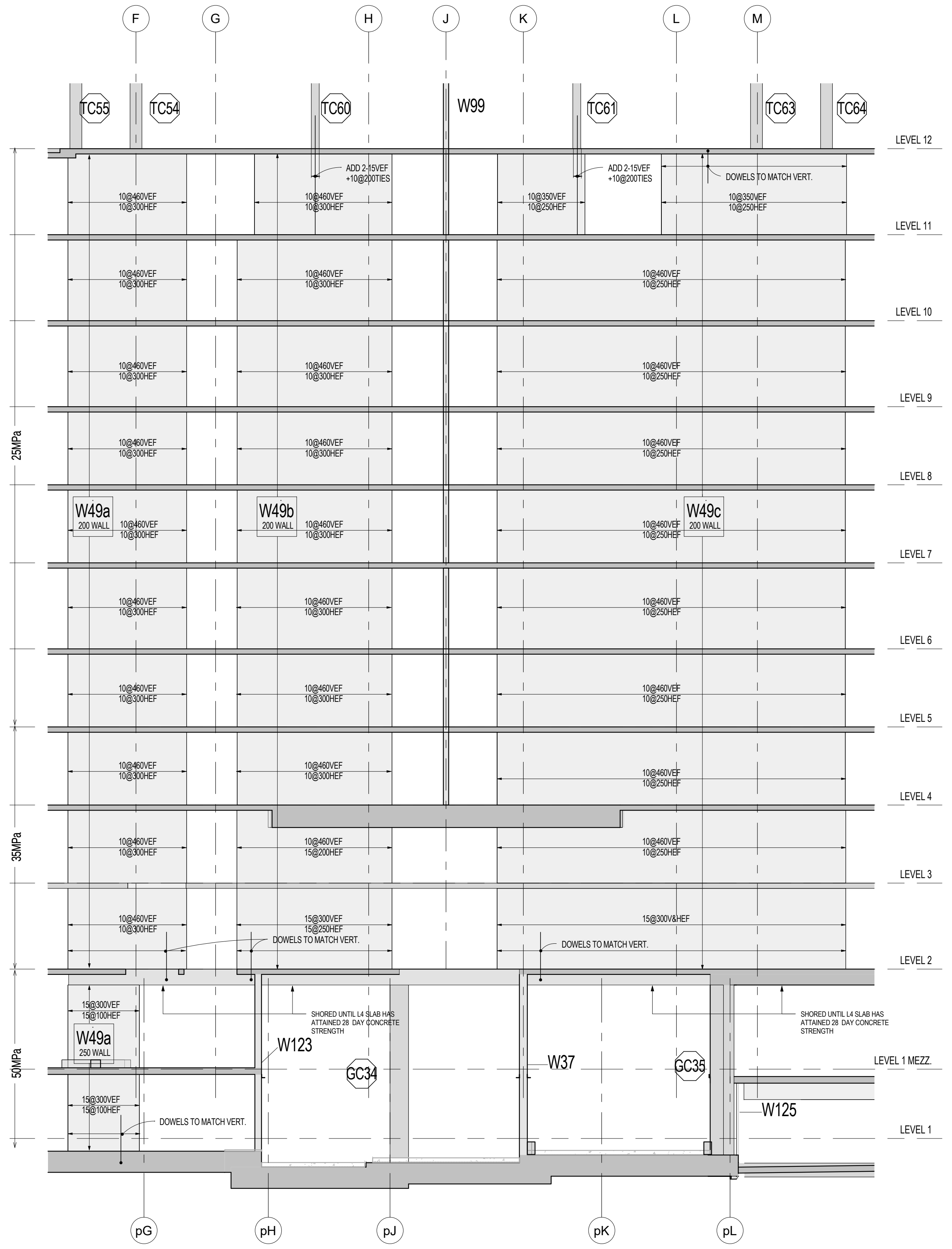
F
G
H
J
K
L
M
TC55
TC54
TC60
W99
TC61
TC63
TC64
W49a
W49b
W49c
200 WALL
W123
GC34
W37
GC35
W125
pG
pH
pJ
pK
pL
LEVEL 12
LEVEL 11
LEVEL 10
LEVEL 9
LEVEL 8
LEVEL 7
LEVEL 6
LEVEL 5
LEVEL 4
LEVEL 3
LEVEL 2
LEVEL 1 MEZZ.
LEVEL 1
DOWELS TO MATCH VERT.

W49 WALL ELEVATION
S3-06 1 : 100

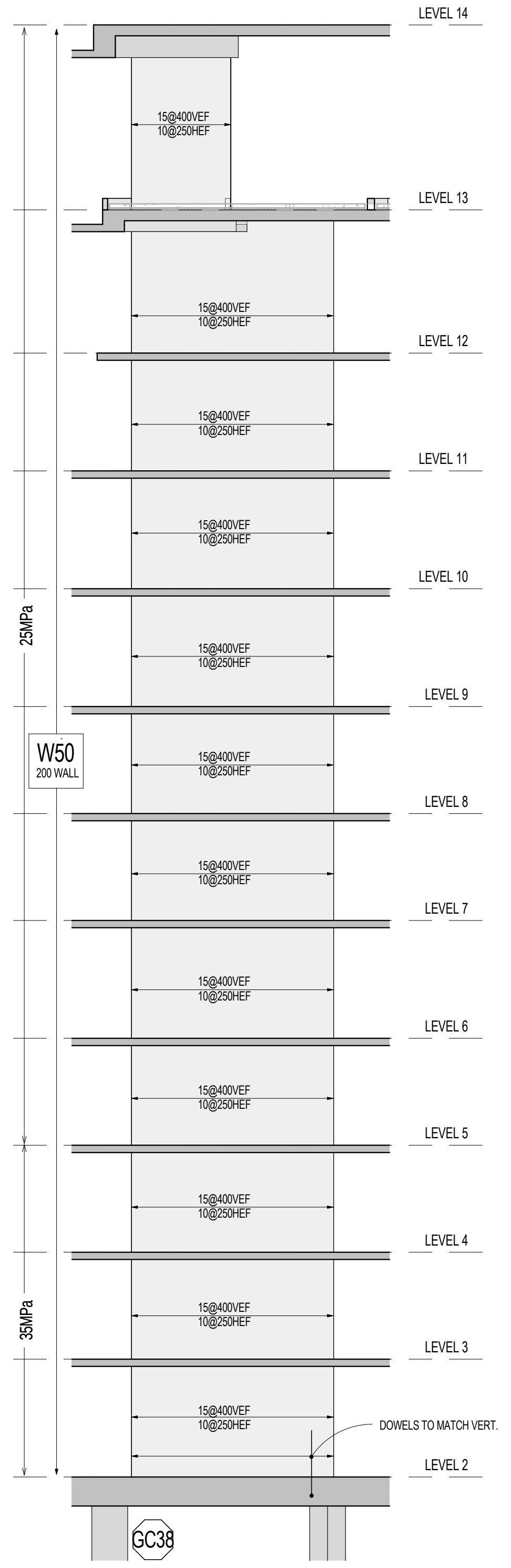
LEVEL 14
LEVEL 13
LEVEL 12
LEVEL 11
LEVEL 10
LEVEL 9
LEVEL 8
LEVEL 7
LEVEL 6
LEVEL 5
LEVEL 4
LEVEL 3
LEVEL 2
W50
200 WALL
GC38
DOWELS TO MATCH VERT.

W50 WALL ELEVATION
S3-06 1 : 100

C10

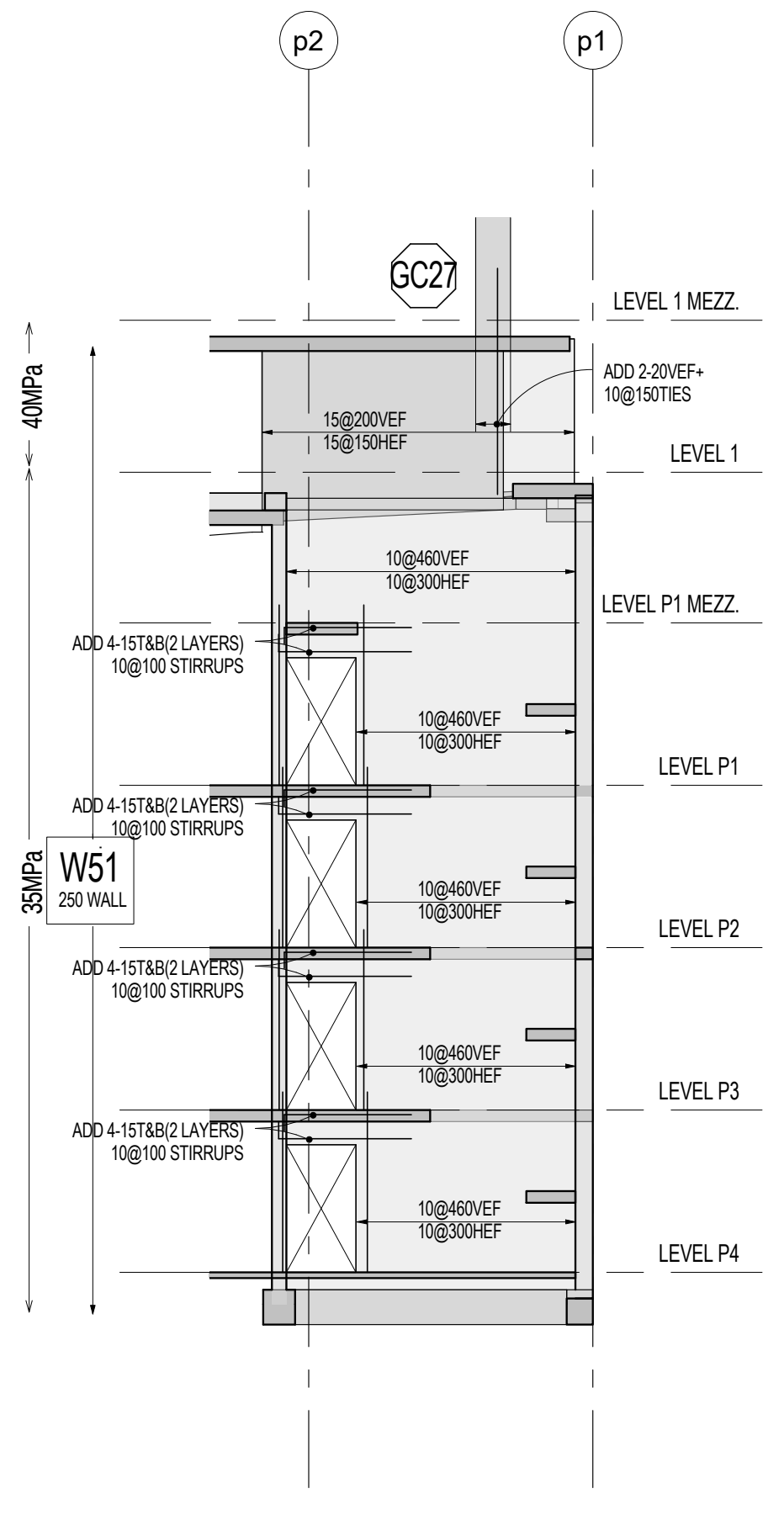
p2
p1
GC27
LEVEL 1 MEZZ.
LEVEL 1
LEVEL P1 MEZZ.
LEVEL P1
LEVEL P2
LEVEL P3
LEVEL P4
W51
200 WALL

W51 WALL ELEVATION
S3-06 1 : 100

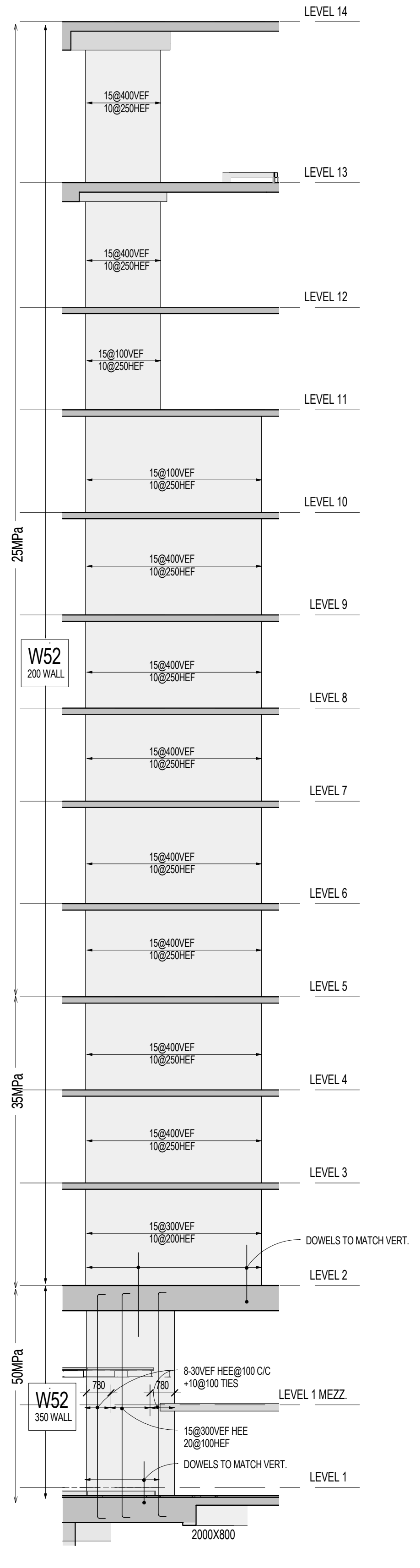
LEVEL 14
LEVEL 13
LEVEL 12
LEVEL 11
LEVEL 10
LEVEL 9
LEVEL 8
LEVEL 7
LEVEL 6
LEVEL 5
LEVEL 4
LEVEL 3
LEVEL 2
LEVEL 1 MEZZ.
LEVEL 1
W52
200 WALL
DOWELS TO MATCH VERT.

W52 WALL ELEVATION
S3-06 1 : 100

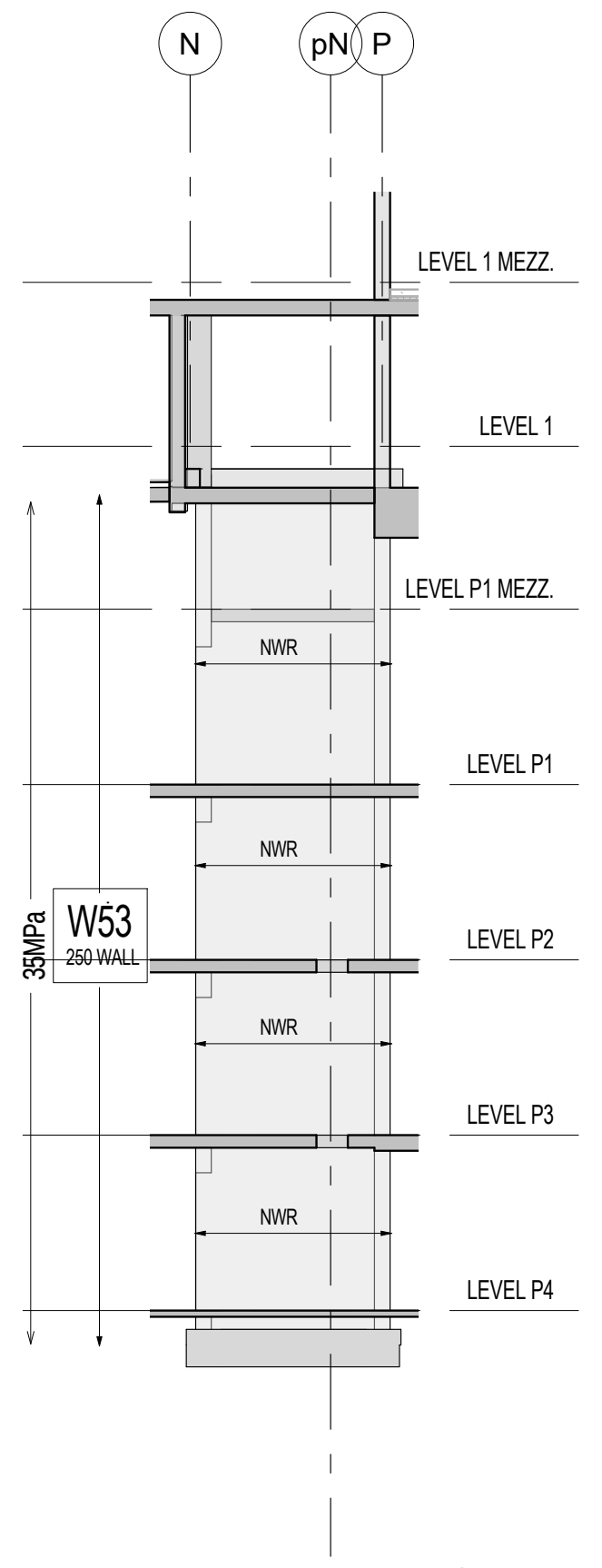
N
pN
P
LEVEL 1 MEZZ
LEVEL 1
LEVEL P1 MEZZ
LEVEL P1
LEVEL P2
LEVEL P3
LEVEL P4
W53
200 WALL

W53 WALL ELEVATION
S3-06 1 : 100

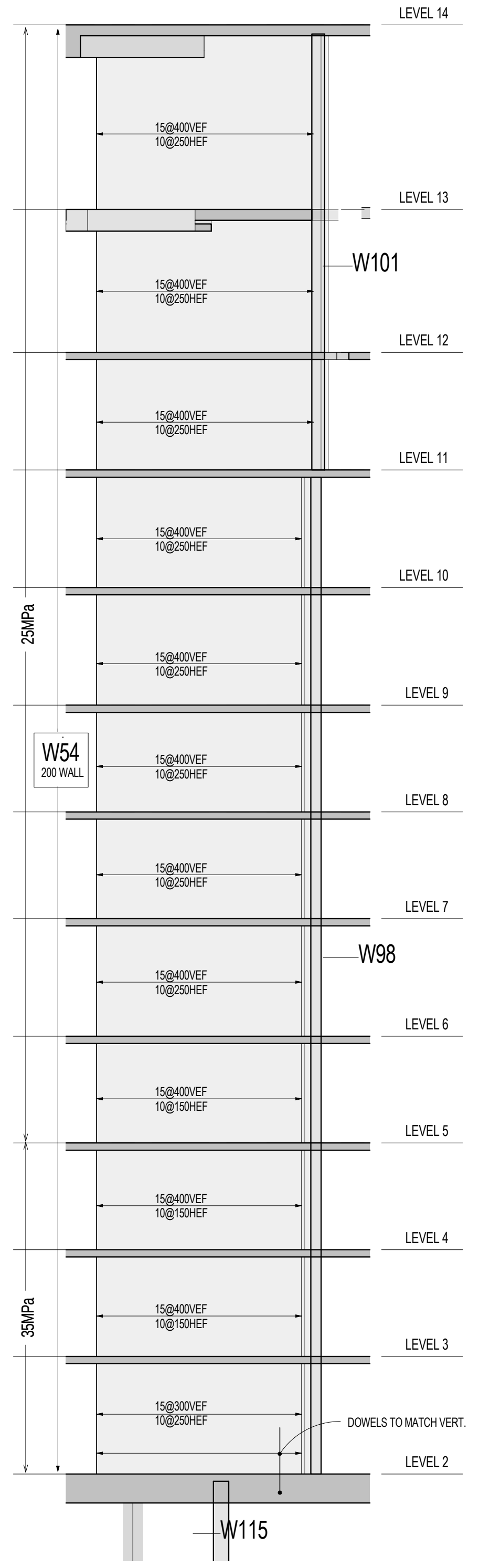
LEVEL 14
LEVEL 13
LEVEL 12
LEVEL 11
LEVEL 10
LEVEL 9
LEVEL 8
LEVEL 7
LEVEL 6
LEVEL 5
LEVEL 4
LEVEL 3
LEVEL 2
W101
W98
W115
W54
200 WALL
DOWELS TO MATCH VERT.

W54 WALL ELEVATION
S3-06 1 : 100

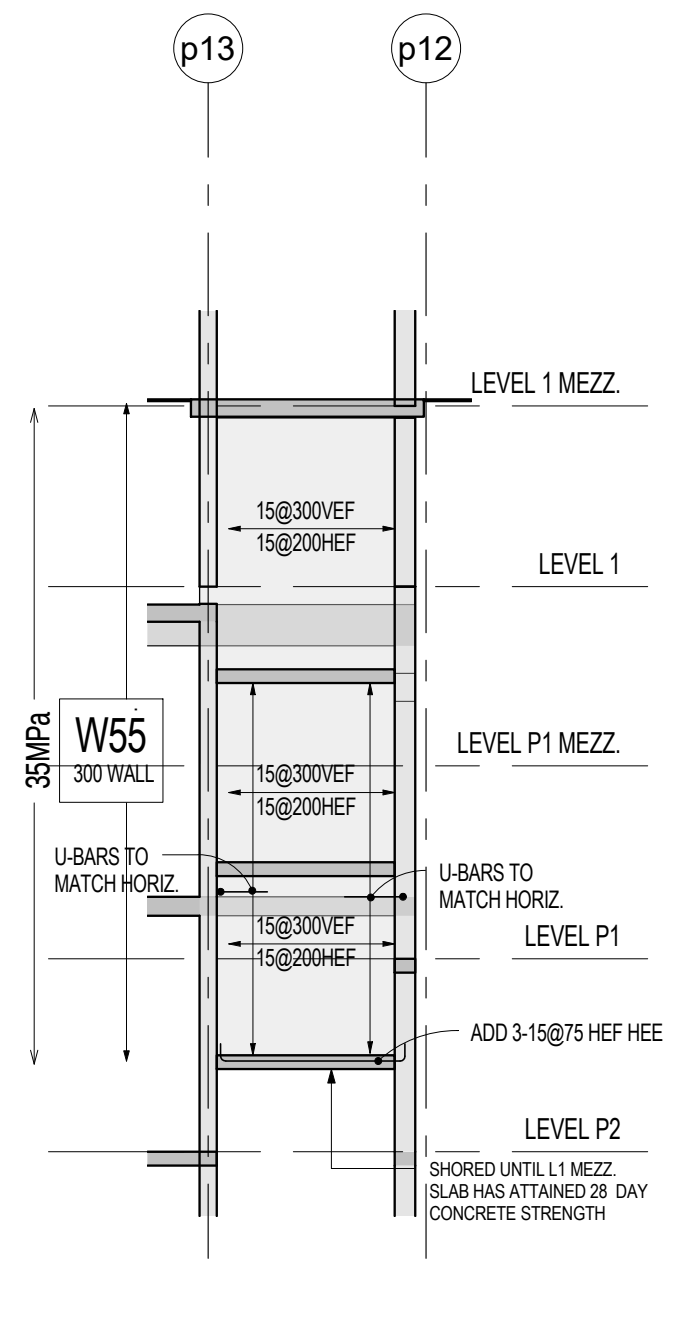
p13
p12
LEVEL 1 MEZZ.
LEVEL 1
LEVEL P1 MEZZ.
LEVEL P1
LEVEL P2
W55
200 WALL

W55 WALL ELEVATION
S3-06 1 : 100

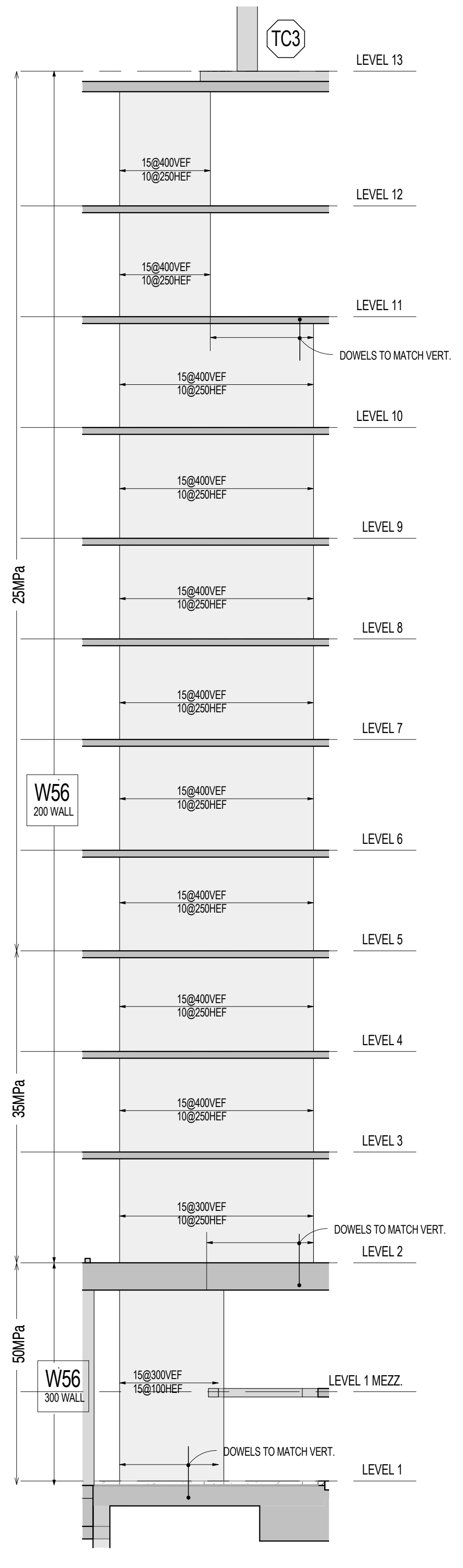
TC3
LEVEL 13
LEVEL 12
LEVEL 11
LEVEL 10
LEVEL 9
LEVEL 8
LEVEL 7
LEVEL 6
LEVEL 5
LEVEL 4
LEVEL 3
LEVEL 2
LEVEL 1 MEZZ.
LEVEL 1
W56
200 WALL
DOWELS TO MATCH VERT.

W56 WALL ELEVATION
S3-06 1 : 100

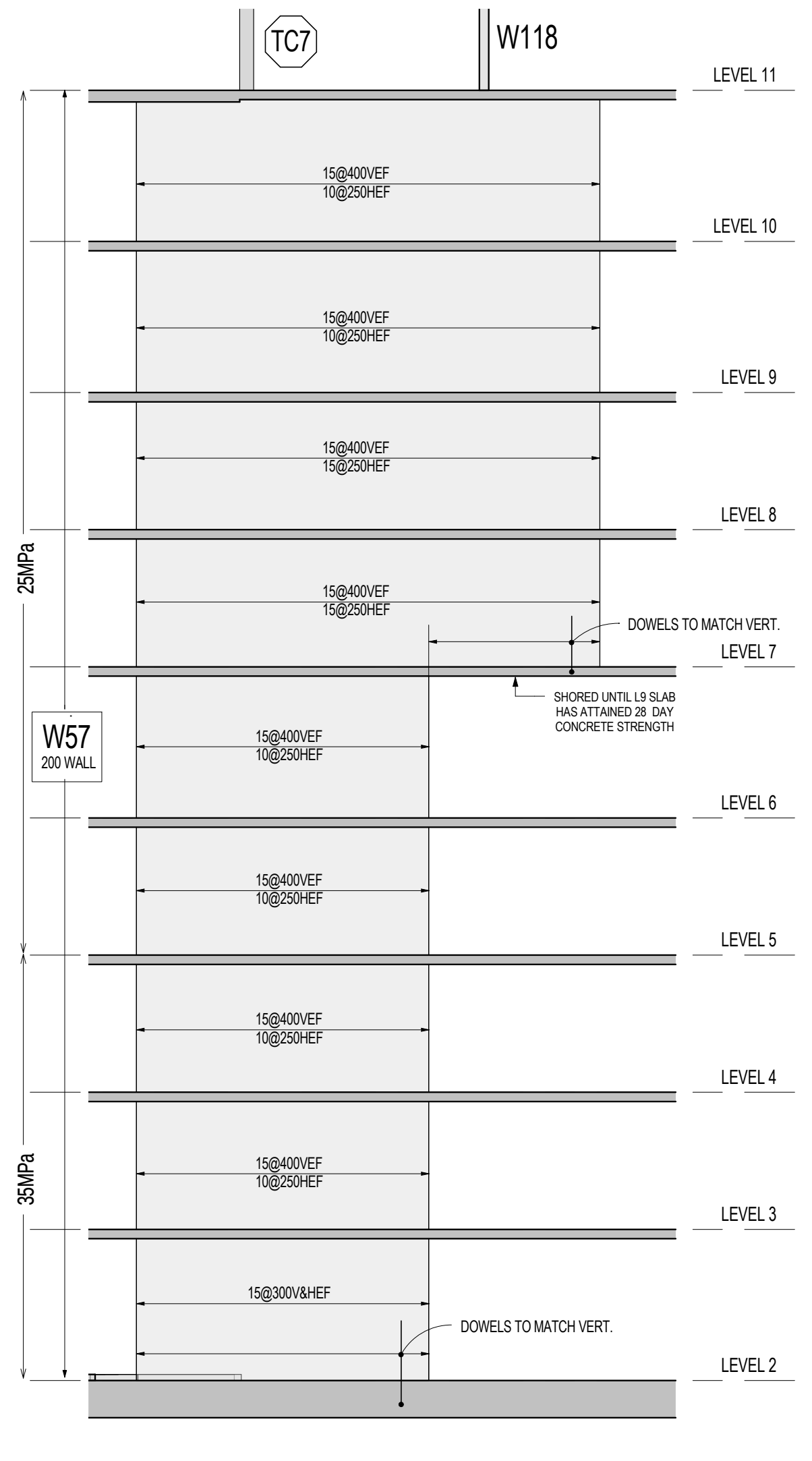
TC7
W118
LEVEL 11
LEVEL 10
LEVEL 9
LEVEL 8
LEVEL 7
LEVEL 6
LEVEL 5
LEVEL 4
LEVEL 3
LEVEL 2
W57
200 WALL
DOWELS TO MATCH VERT.

W57 WALL ELEVATION
S3-06 1 : 100

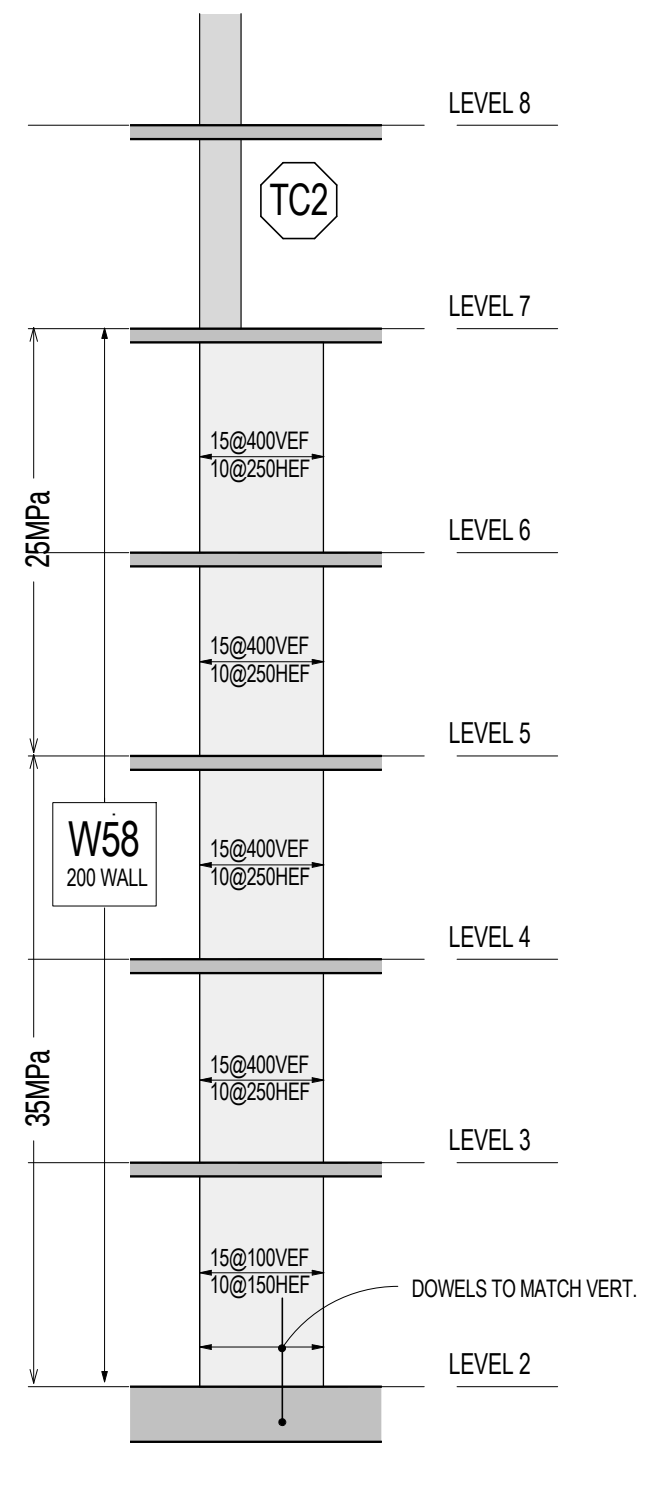
TC2
LEVEL 8
LEVEL 7
LEVEL 6
LEVEL 5
LEVEL 4
LEVEL 3
LEVEL 2
W58
200 WALL
DOWELS TO MATCH VERT.

W58 WALL ELEVATION
S3-06 1 : 100

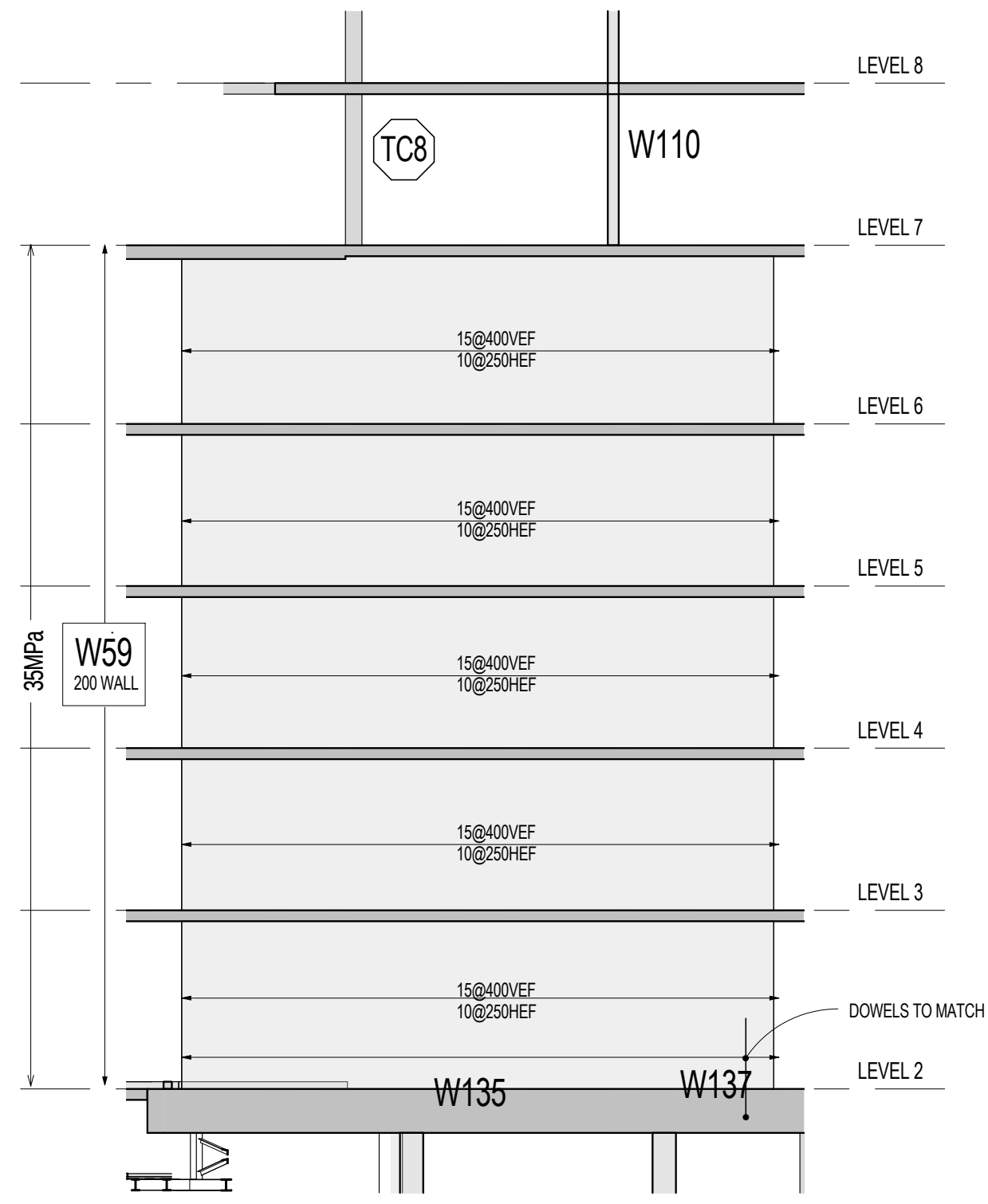
TC8
W110
LEVEL 8
LEVEL 7
LEVEL 6
LEVEL 5
LEVEL 4
LEVEL 3
LEVEL 2
W59
200 WALL
W135
W137
DOWELS TO MATCH VERT.

W59 WALL ELEVATION
S3-06 1 : 100

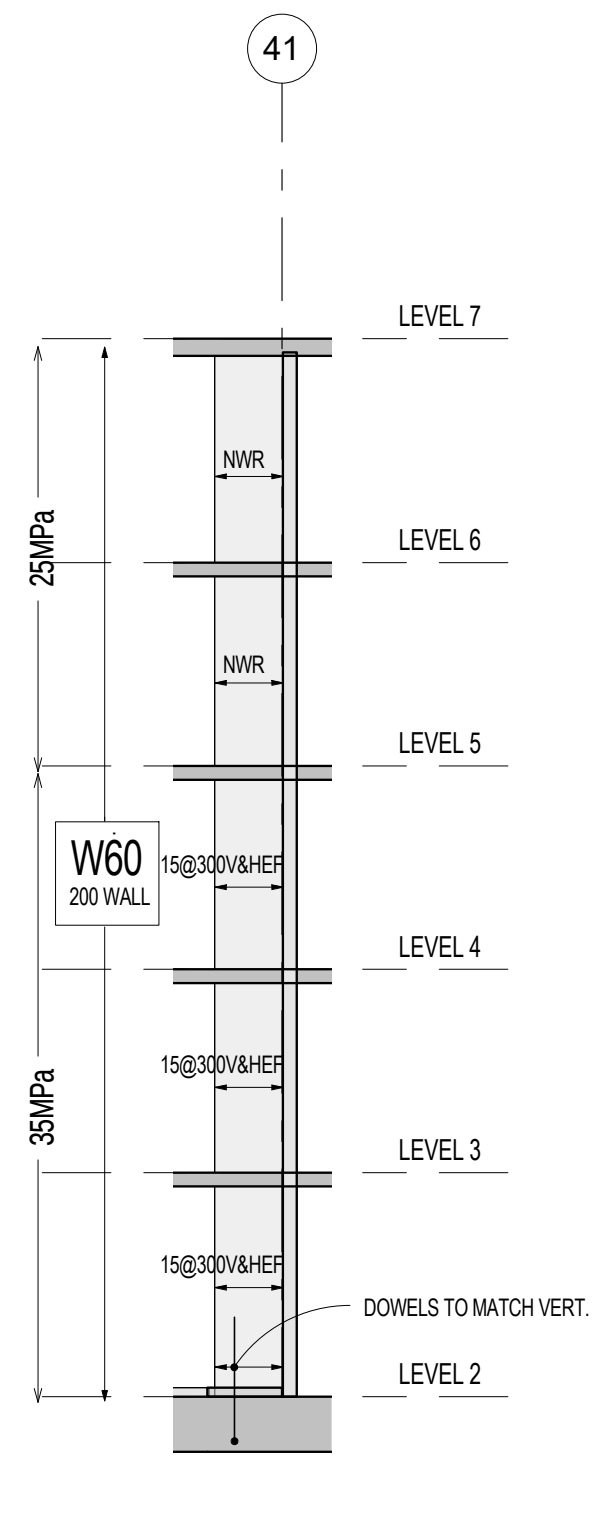
41
LEVEL 7
LEVEL 6
LEVEL 5
LEVEL 4
LEVEL 3
LEVEL 2
W60
200 WALL
DOWELS TO MATCH VERT.

W60 WALL ELEVATION
S3-06 1 : 100

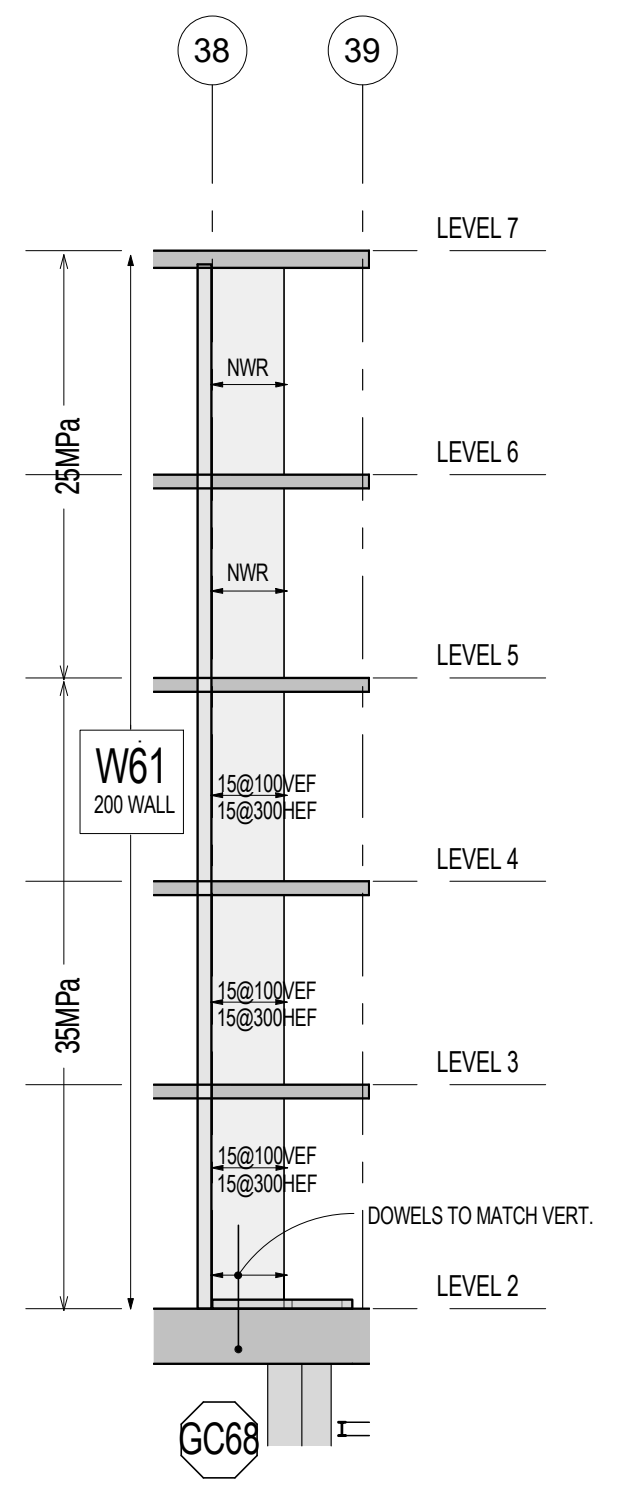
38
39
LEVEL 7
LEVEL 6
LEVEL 5
LEVEL 4
LEVEL 3
LEVEL 2
W61
200 WALL
GC68
DOWELS TO MATCH VERT.

W61 WALL ELEVATION
S3-06 1 : 100

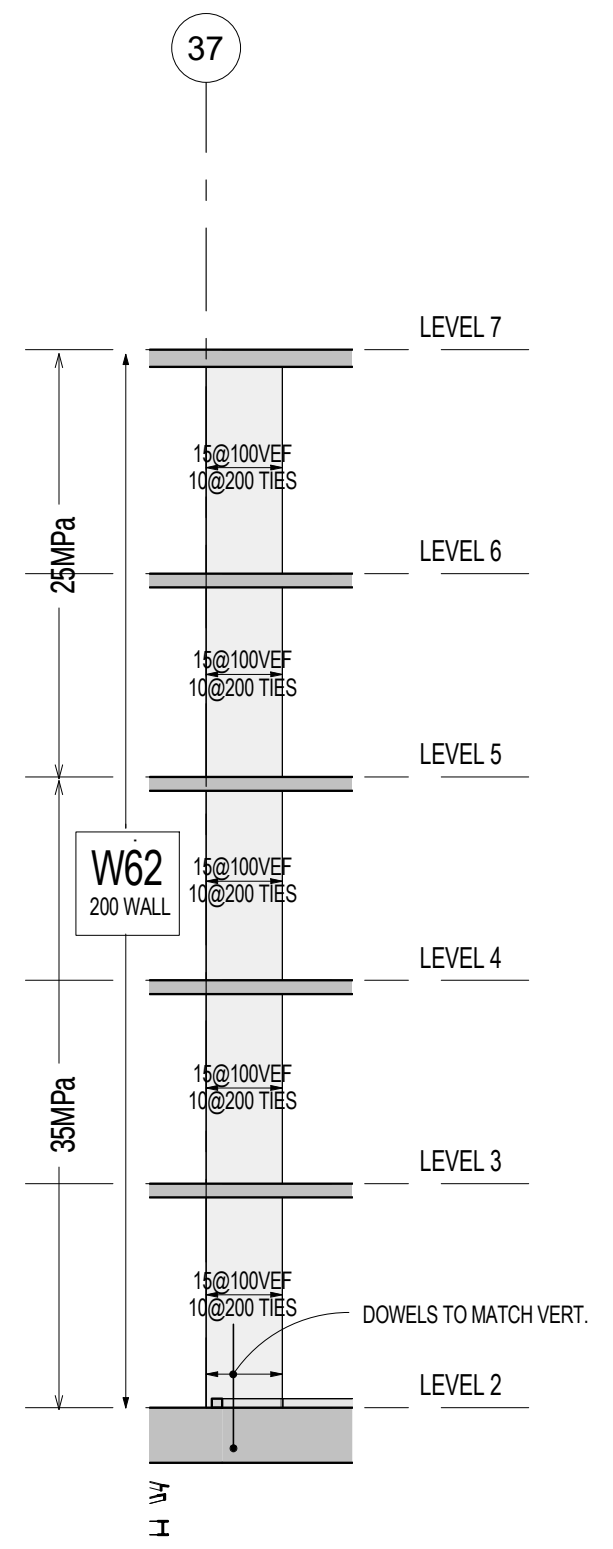
37
LEVEL 7
LEVEL 6
LEVEL 5
LEVEL 4
LEVEL 3
LEVEL 2
W62
200 WALL
DOWELS TO MATCH VERT.

W62 WALL ELEVATION
S3-06 1 : 100

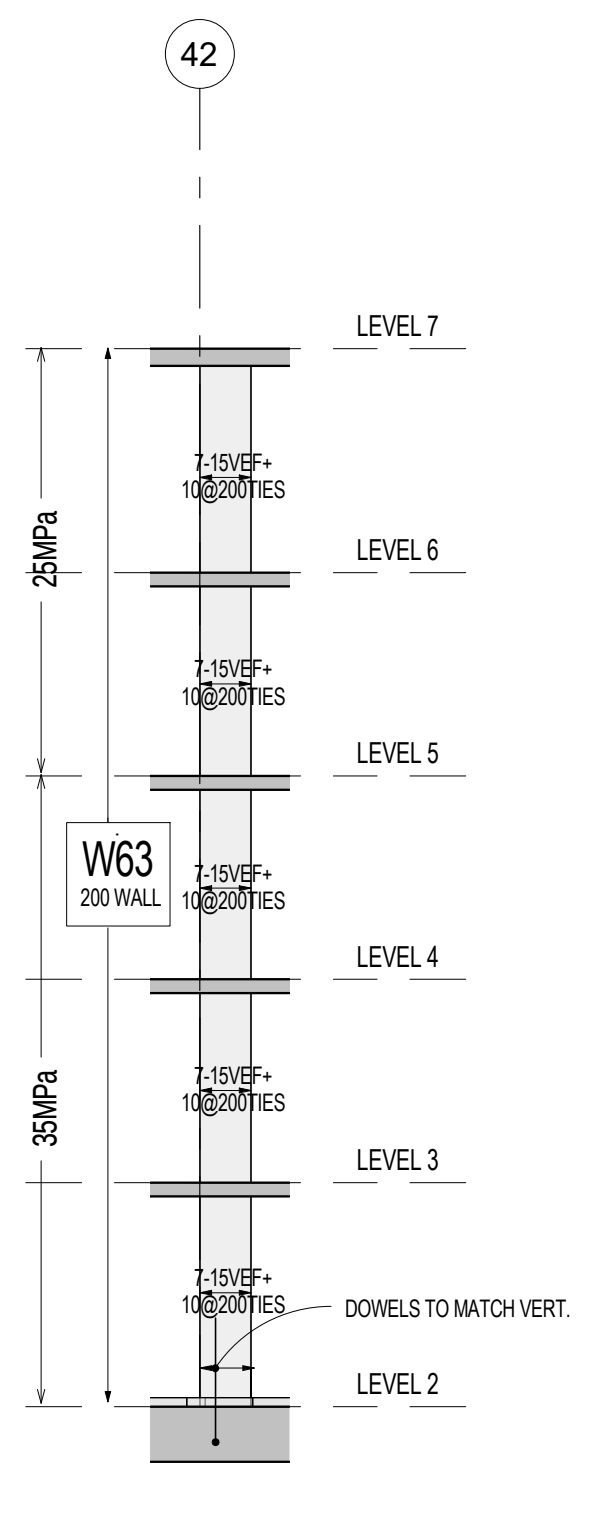
42
LEVEL 7
LEVEL 6
LEVEL 5
LEVEL 4
LEVEL 3
LEVEL 2
W63
200 WALL
DOWELS TO MATCH VERT.

W63 WALL ELEVATION
S3-06 1 : 100

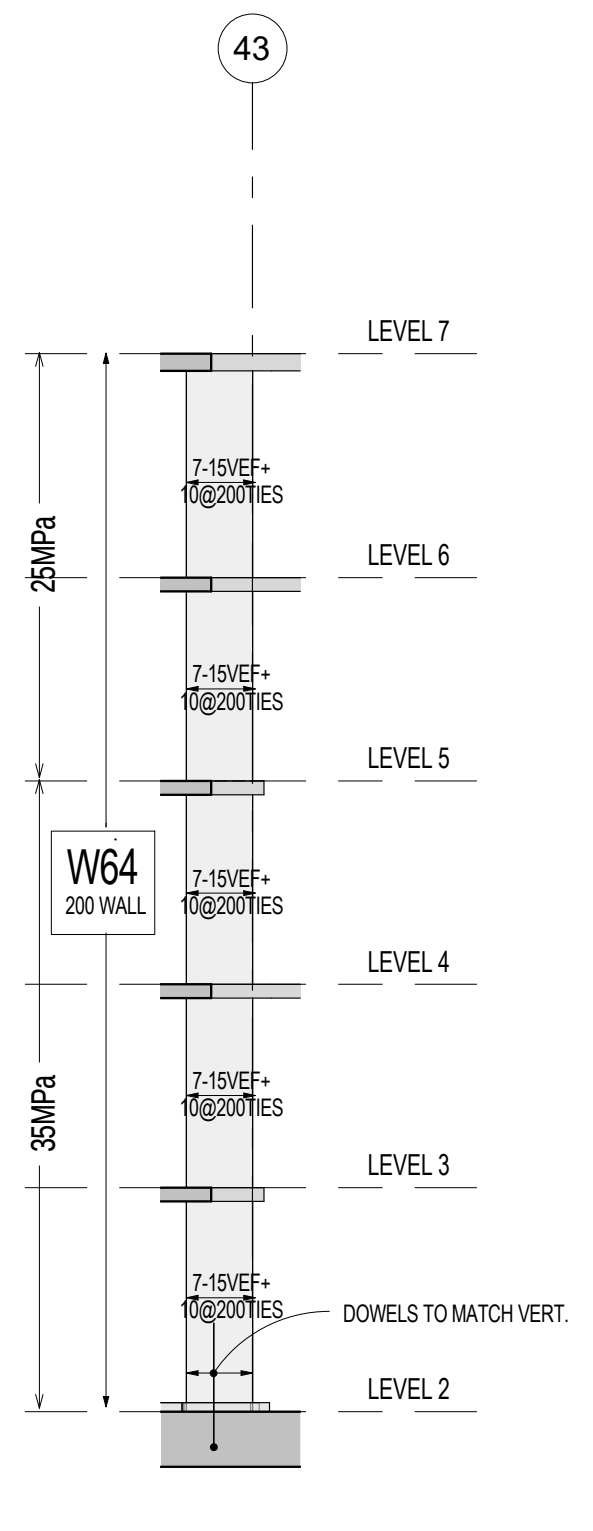
43
LEVEL 7
LEVEL 6
LEVEL 5
LEVEL 4
LEVEL 3
LEVEL 2
W64
200 WALL
DOWELS TO MATCH VERT.

W64 WALL ELEVATION
S3-06 1 : 100

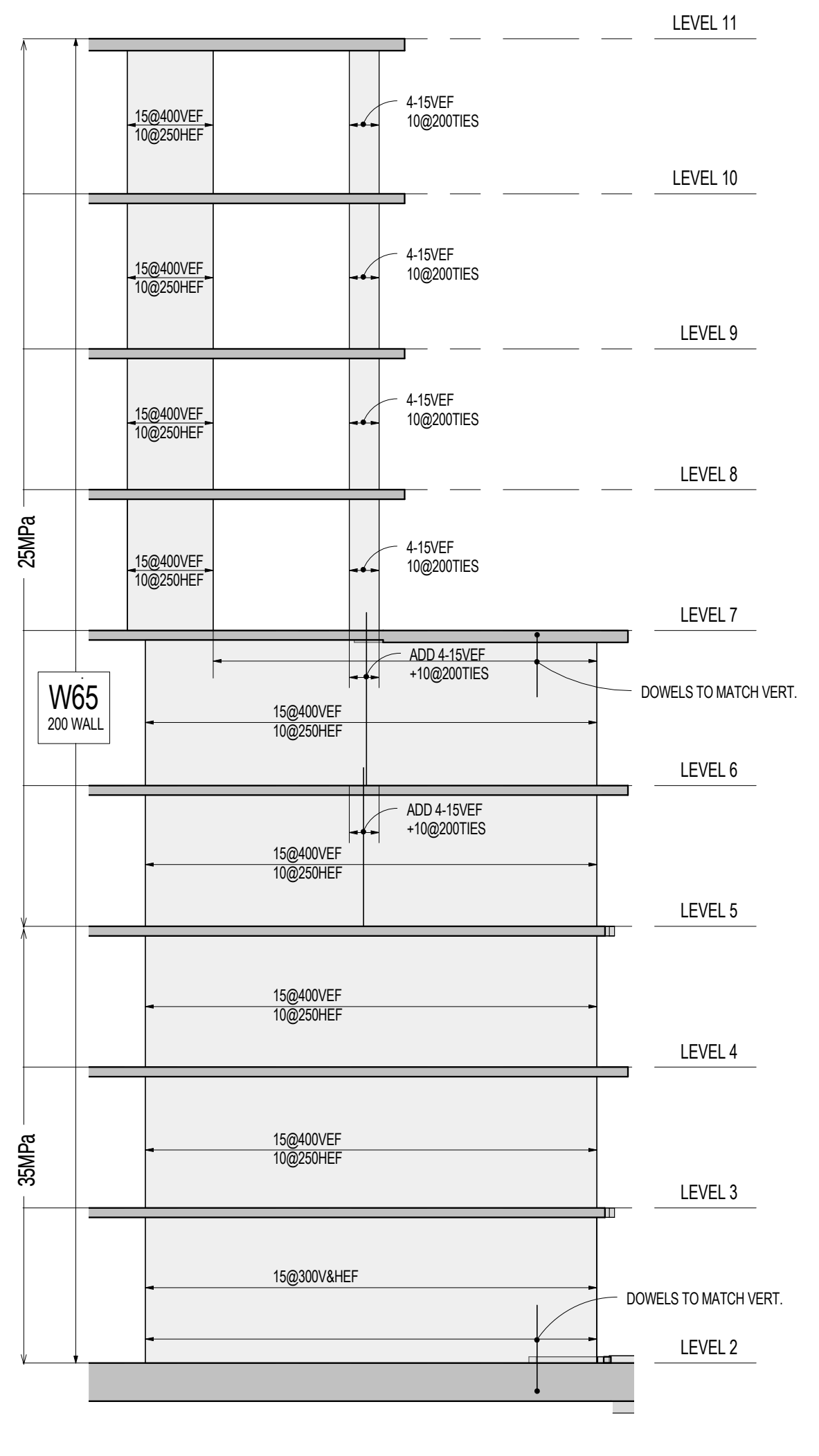
LEVEL 11
LEVEL 10
LEVEL 9
LEVEL 8
LEVEL 7
LEVEL 6
LEVEL 5
LEVEL 4
LEVEL 3
LEVEL 2
W65
200 WALL
DOWELS TO MATCH VERT.

W65 WALL ELEVATION
S3-06 1 : 100

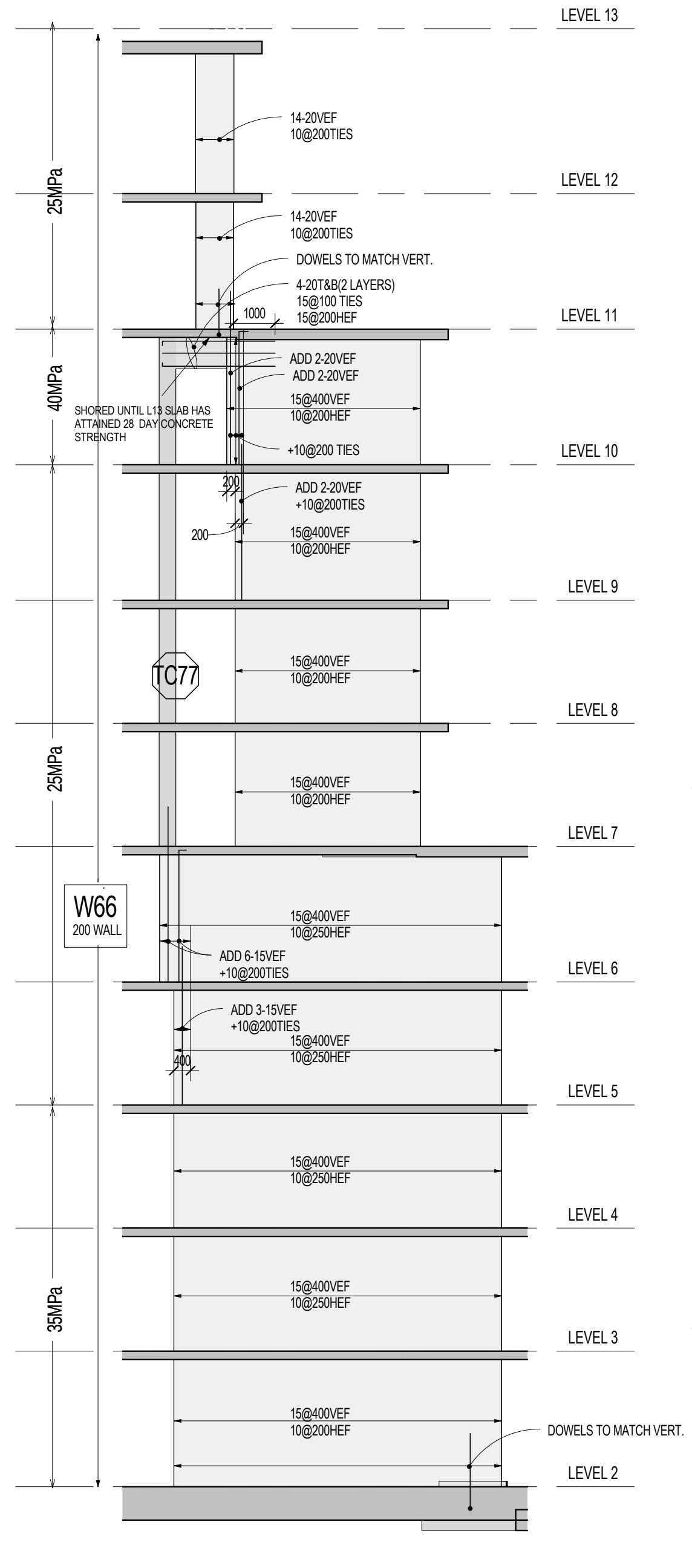
LEVEL 13
LEVEL 12
LEVEL 11
LEVEL 10
LEVEL 9
LEVEL 8
LEVEL 7
LEVEL 6
LEVEL 5
LEVEL 4
LEVEL 3
LEVEL 2
TC77
W66
200 WALL
DOWELS TO MATCH VERT.

W66 WALL ELEVATION
S3-06 1 : 100

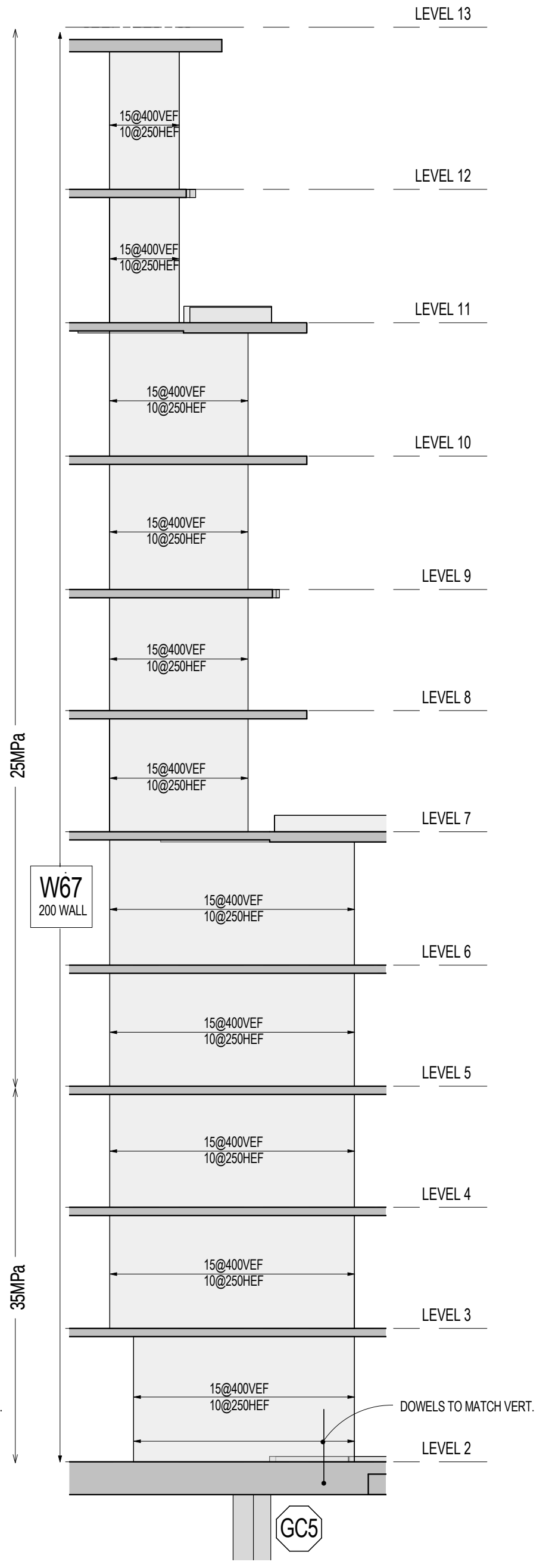
LEVEL 13
LEVEL 12
LEVEL 11
LEVEL 10
LEVEL 9
LEVEL 8
LEVEL 7
LEVEL 6
LEVEL 5
LEVEL 4
LEVEL 3
LEVEL 2
W67
200 WALL
GC5
DOWELS TO MATCH VERT.

W67 WALL ELEVATION
S3-06 1 : 100

REFER TO NOTES ON SHEET S3-01

Contractor Must Check And Verify All Dimensions On The Job.

Do Not Scale The Drawings.

All Drawings, Specifications And Related Documents Are The Copyright Of The Architect And Must Be Returned Upon Request.

Reproduction Of Drawings, Specifications And Related Documents In Part Or Whole Is Forbidden Without The Architects Written Permission.

This Drawing Is Not To Be Used For Construction Until Signed ByThe Architect.

Date:

DEC.18,2015 DEC.18,2015

stephenson ENGINEERING
2550 Victoria Park Ave. Suite 602
Toronto ON M2J 5A9 | Tel: (416) 635 9970
www.stephenson-eng.com | info@stephenson-eng.com

No	Revision	Date

No	Issued For	Date
7	ISSUED FOR STEEL TENDER	DEC.18,2015
4	BUILDING PERMIT RESUBMISSION	SEPT.21,2015
3	BUILDING PERMIT RESUBMISSION	JULY 22,2015
2	BUILDING PERMIT SUBMISSION	JUNE 12,2015
1	ISSUED FOR WT REVIEW	MAY 01,2015

AQUAVISTA
AT BAYSIDE TORONTO

Drawing Title
WALL ELEVATIONS

Project
Hines TRIDEL®
AQUAVISTA
Block 3 - R3 & R4
Merchant's Whart
Toronto, ON

Scale: 1 : 100
Drawn by: DC
Checked by: BK/BBS
Project No.: 20140031
Date: DEC.18,2015
Drawing No.: S3-06

Plot Date: 3/9/2016 10:02:17 AM

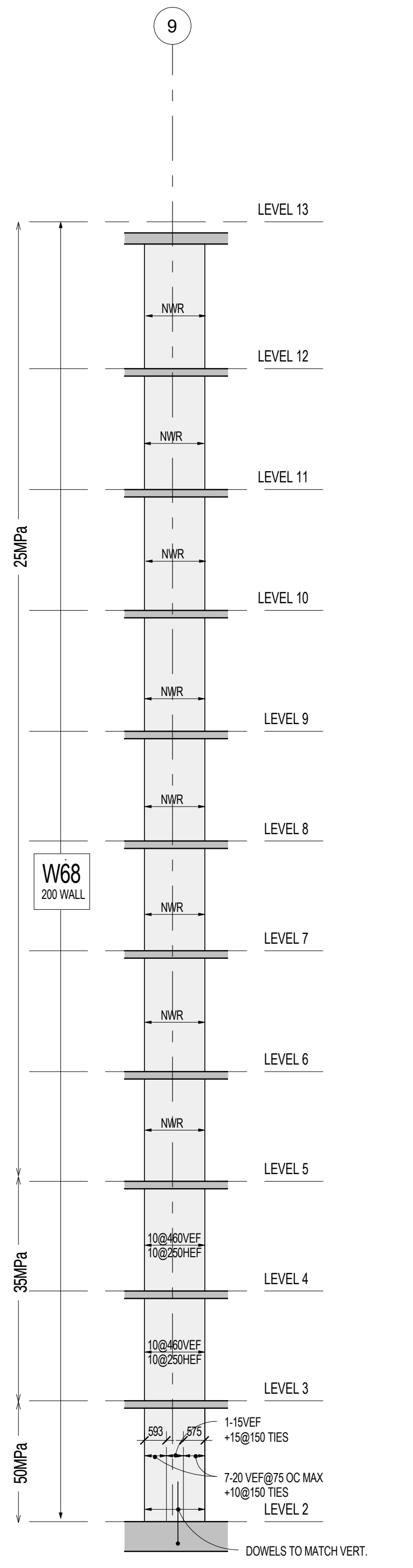
9
LEVEL 13
LEVEL 12
LEVEL 11
LEVEL 10
LEVEL 9
LEVEL 8
LEVEL 7
LEVEL 6
LEVEL 5
LEVEL 4
LEVEL 3
LEVEL 2
W68
200 WALL
25MPa
35MPa
50MPa
DOWELS TO MATCH VERT.

W68 WALL ELEVATION
S3-07 1 : 100

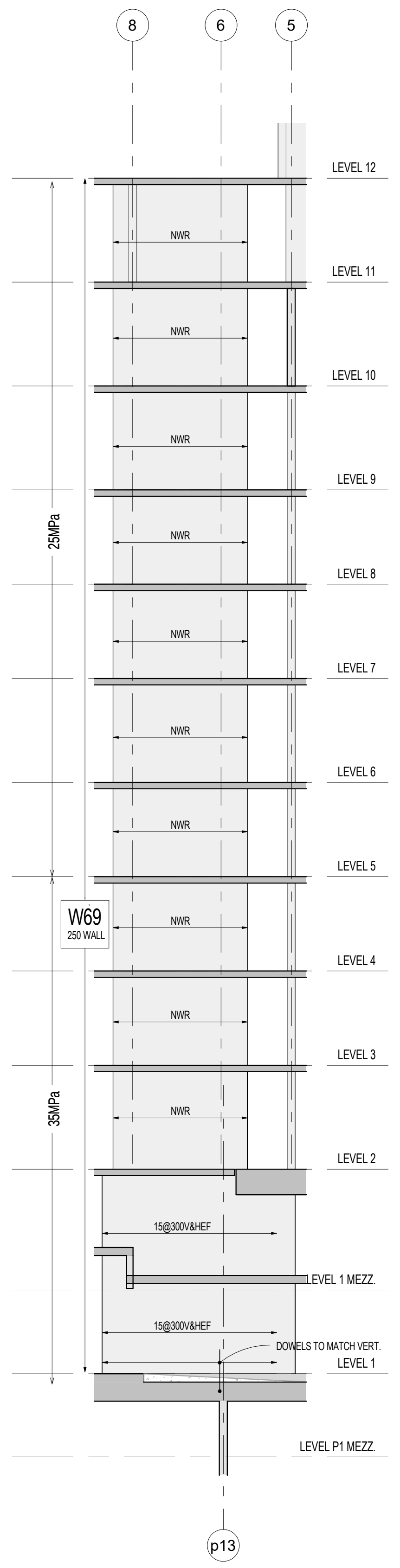
8
6
5
LEVEL 12
LEVEL 11
LEVEL 10
LEVEL 9
LEVEL 8
LEVEL 7
LEVEL 6
LEVEL 5
LEVEL 4
LEVEL 3
LEVEL 2
LEVEL 1 MEZZ.
LEVEL 1
LEVEL P1 MEZZ
W69
250 WALL
25MPa
35MPa
p13

W69 WALL ELEVATION
S3-07 1 : 100

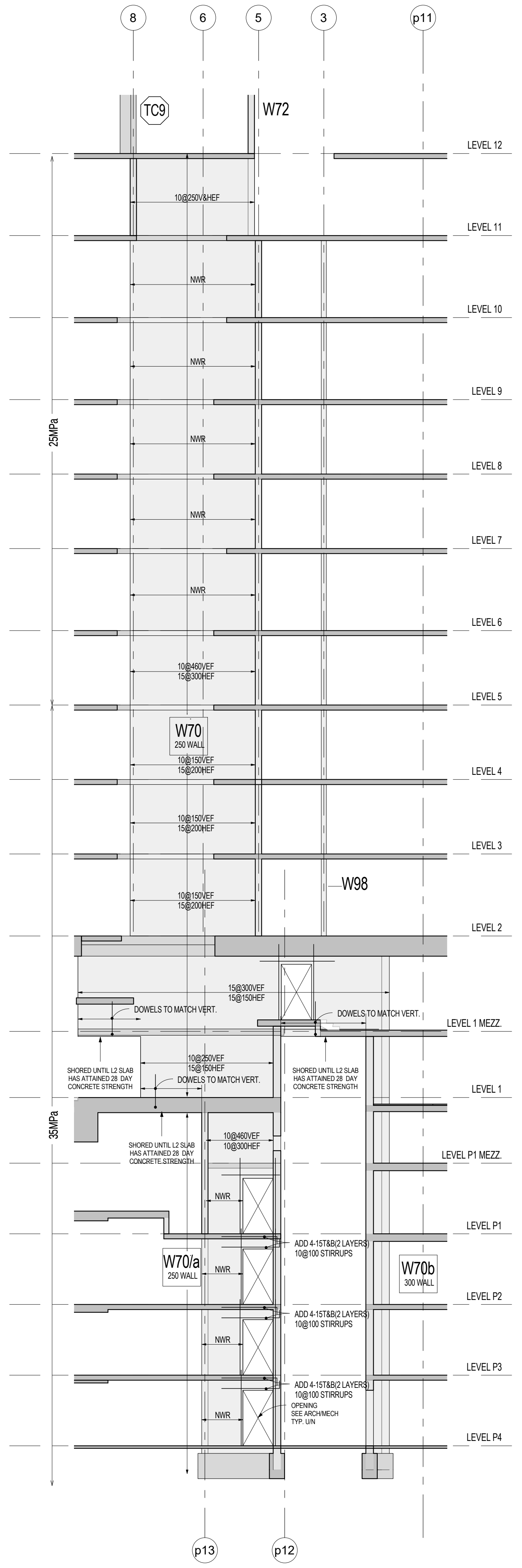
8
6
5
3
p11
TC9
W72
W98
W70
W70/a
250 WALL
W70b
300 WALL
LEVEL 12
LEVEL 11
LEVEL 10
LEVEL 9
LEVEL 8
LEVEL 7
LEVEL 6
LEVEL 5
LEVEL 4
LEVEL 3
LEVEL 2
LEVEL 1 MEZZ.
LEVEL 1
LEVEL P1 MEZZ
LEVEL P1
LEVEL P2
LEVEL P3
LEVEL P4
25MPa
35MPa
DOWELS TO MATCH VERT.
SHORED UNTIL L3 SLAB HAS ATTAINED 28 DAY CONCRETE STRENGTH
p13
p12

W70 WALL ELEVATION
S3-07 1 : 100

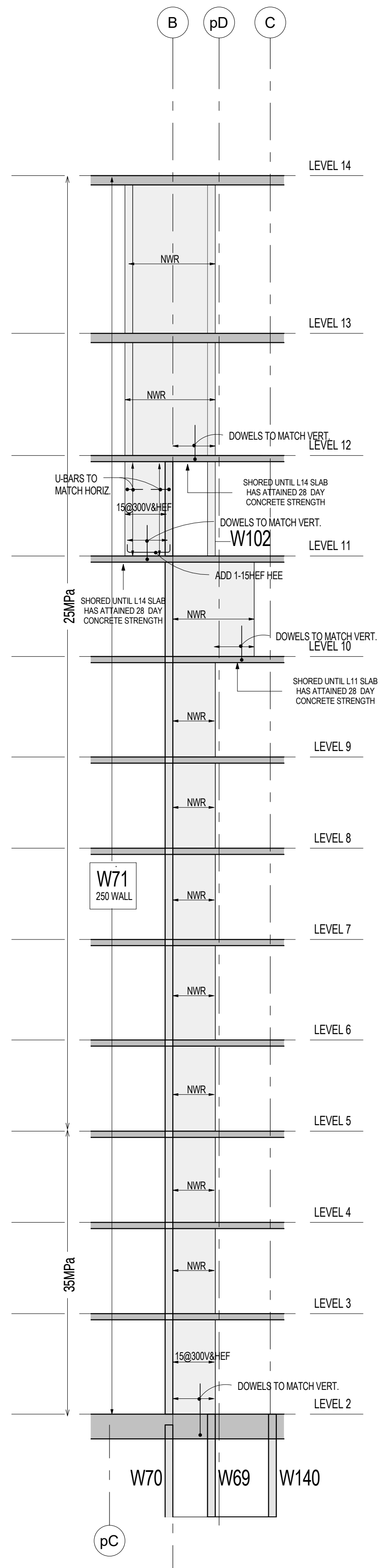
B
pD
C
LEVEL 14
LEVEL 13
LEVEL 12
LEVEL 11
LEVEL 10
LEVEL 9
LEVEL 8
LEVEL 7
LEVEL 6
LEVEL 5
LEVEL 4
LEVEL 3
LEVEL 2
W102
W71
200 WALL
W70
W69
W140
pC
25MPa
35MPa
DOWELS TO MATCH VERT.
SHORED UNTIL L14 SLAB HAS ATTAINED 28 DAY CONCRETE STRENGTH

W71,W72 WALL ELEVATION
S3-07 1 : 100

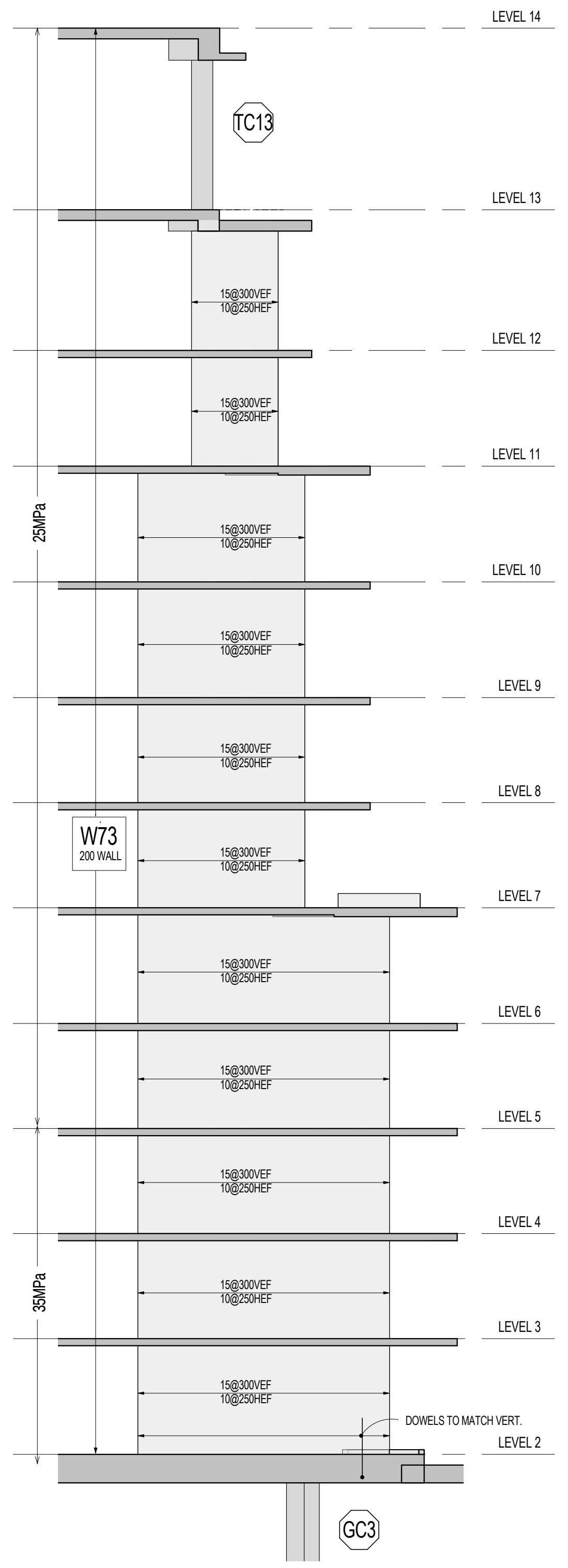
LEVEL 14
LEVEL 13
LEVEL 12
LEVEL 11
LEVEL 10
LEVEL 9
LEVEL 8
LEVEL 7
LEVEL 6
LEVEL 5
LEVEL 4
LEVEL 3
LEVEL 2
TC13
W73
200 WALL
GC3
25MPa
35MPa
DOWELS TO MATCH VERT.

W73 WALL ELEVATION
S3-07 1 : 100

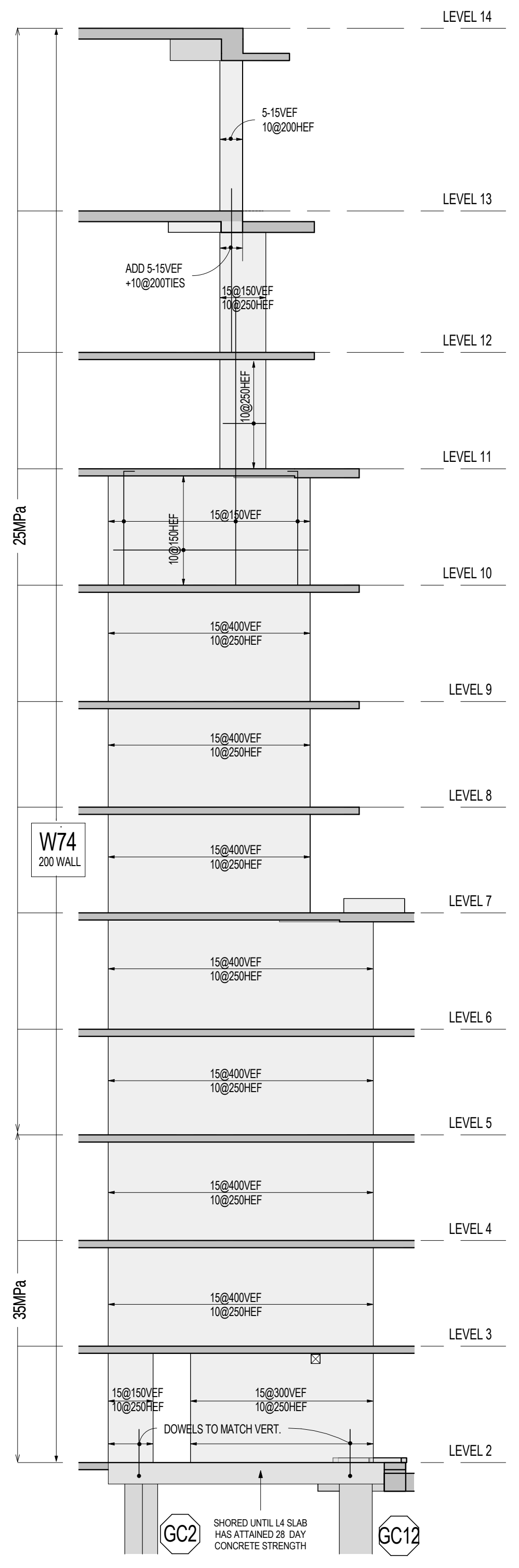
LEVEL 14
LEVEL 13
LEVEL 12
LEVEL 11
LEVEL 10
LEVEL 9
LEVEL 8
LEVEL 7
LEVEL 6
LEVEL 5
LEVEL 4
LEVEL 3
LEVEL 2
W74
200 WALL
GC2
GC12
25MPa
35MPa
DOWELS TO MATCH VERT.

W74 WALL ELEVATION
S3-07 1 : 100

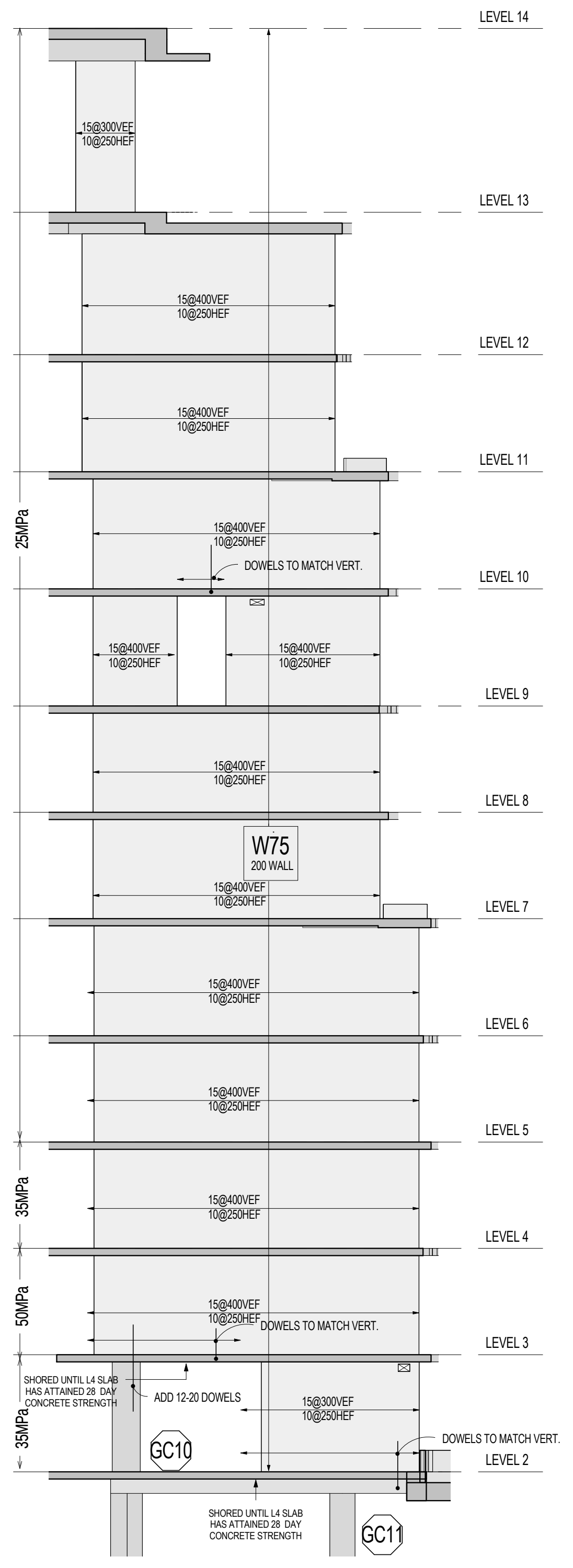
LEVEL 14
LEVEL 13
LEVEL 12
LEVEL 11
LEVEL 10
LEVEL 9
LEVEL 8
LEVEL 7
LEVEL 6
LEVEL 5
LEVEL 4
LEVEL 3
LEVEL 2
W75
200 WALL
GC10
GC11
25MPa
35MPa
50MPa
DOWELS TO MATCH VERT.

W75 WALL ELEVATION
S3-07 1 : 100

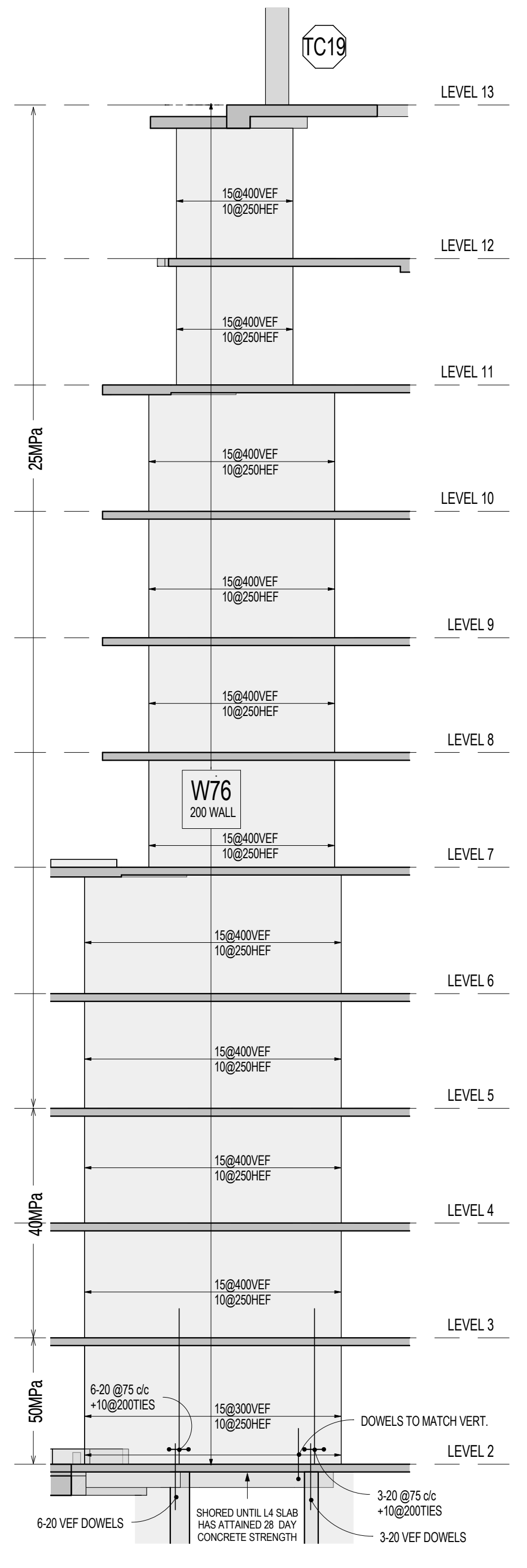
TC19
LEVEL 13
LEVEL 12
LEVEL 11
LEVEL 10
LEVEL 9
LEVEL 8
LEVEL 7
LEVEL 6
LEVEL 5
LEVEL 4
LEVEL 3
LEVEL 2
W76
200 WALL
25MPa
40MPa
50MPa
DOWELS TO MATCH VERT.

W76 WALL ELEVATION
S3-07 1 : 100

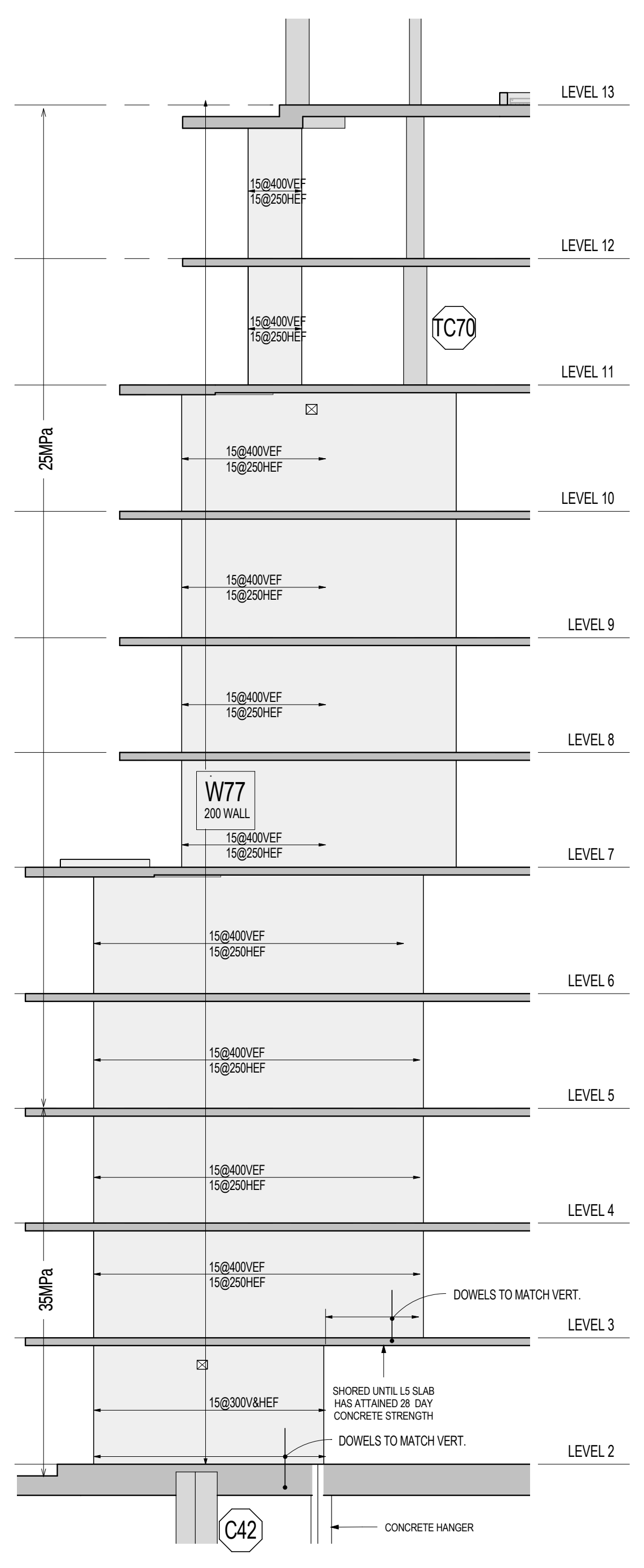
LEVEL 13
LEVEL 12
LEVEL 11
LEVEL 10
LEVEL 9
LEVEL 8
LEVEL 7
LEVEL 6
LEVEL 5
LEVEL 4
LEVEL 3
LEVEL 2
TC70
W77
200 WALL
C42
25MPa
35MPa
DOWELS TO MATCH VERT.
CONCRETE HANGER

W77 WALL ELEVATION
S3-07 1 : 100

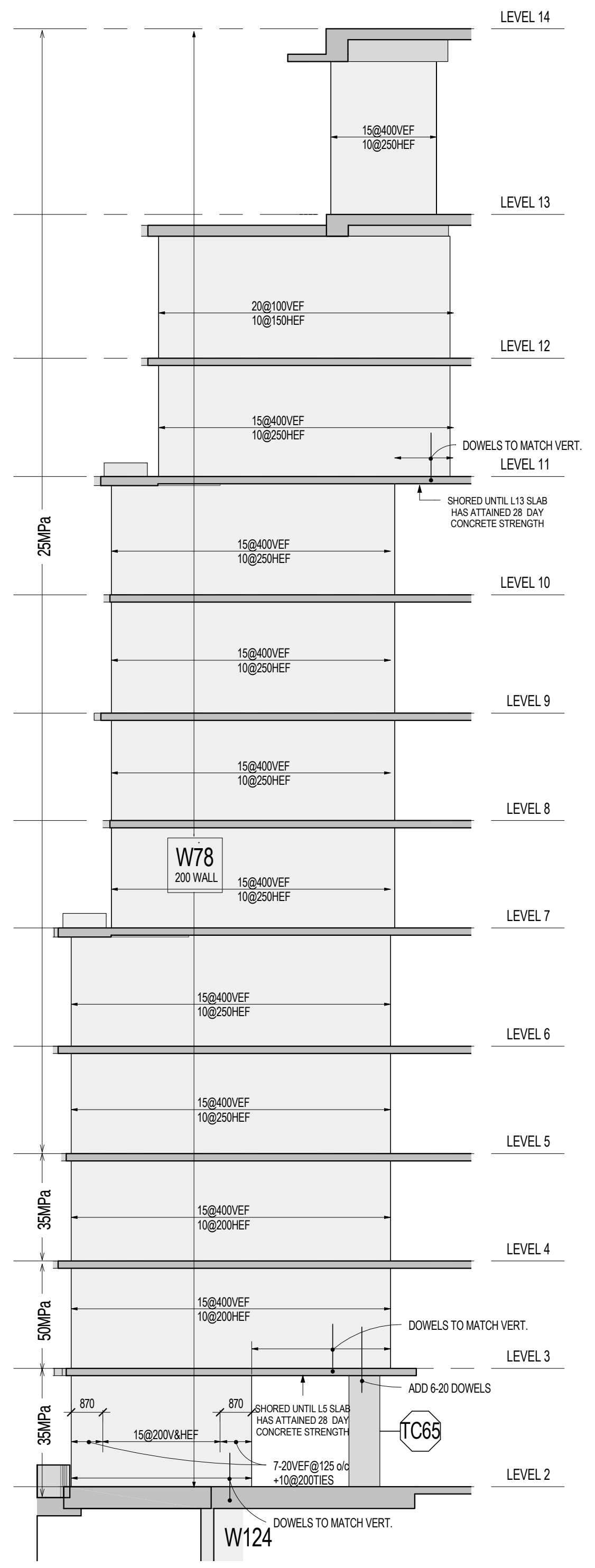
LEVEL 14
LEVEL 13
LEVEL 12
LEVEL 11
LEVEL 10
LEVEL 9
LEVEL 8
LEVEL 7
LEVEL 6
LEVEL 5
LEVEL 4
LEVEL 3
LEVEL 2
W78
200 WALL
TC65
W124
25MPa
35MPa
50MPa
DOWELS TO MATCH VERT.

W78 WALL ELEVATION
S3-07 1 : 100

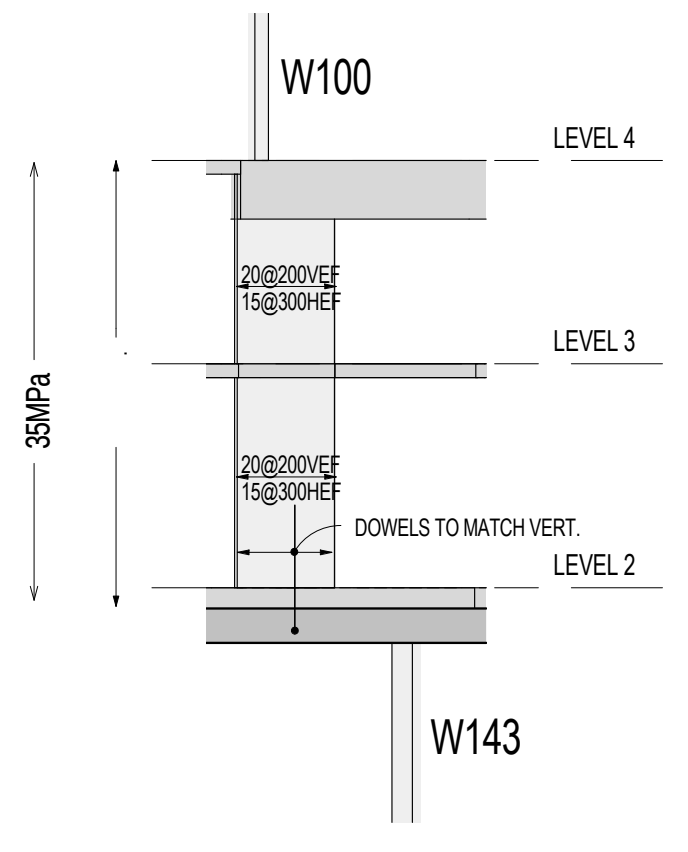
W100
LEVEL 4
LEVEL 3
LEVEL 2
W143
35MPa
DOWELS TO MATCH VERT.

W79 WALL ELEVATION
S3-07 1 : 100

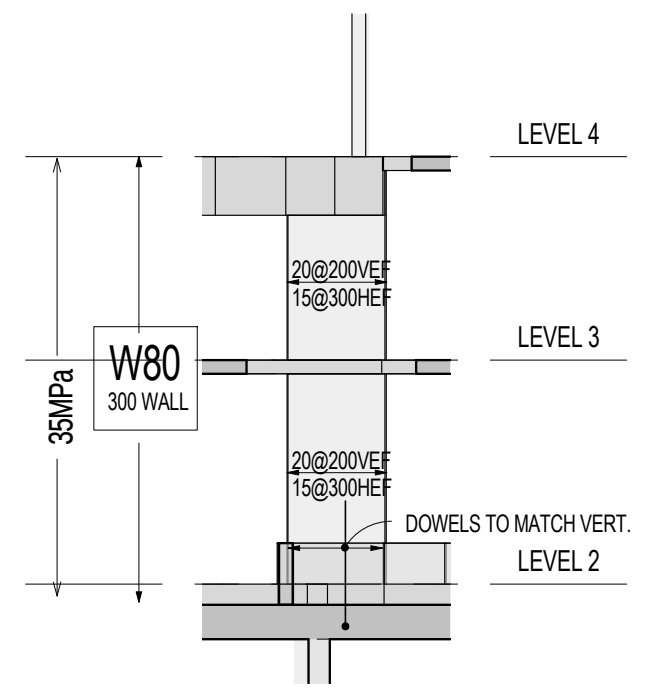
LEVEL 4
LEVEL 3
LEVEL 2
W80
300 WALL
35MPa
DOWELS TO MATCH VERT.

W80 WALL ELEVATION
S3-07 1 : 100

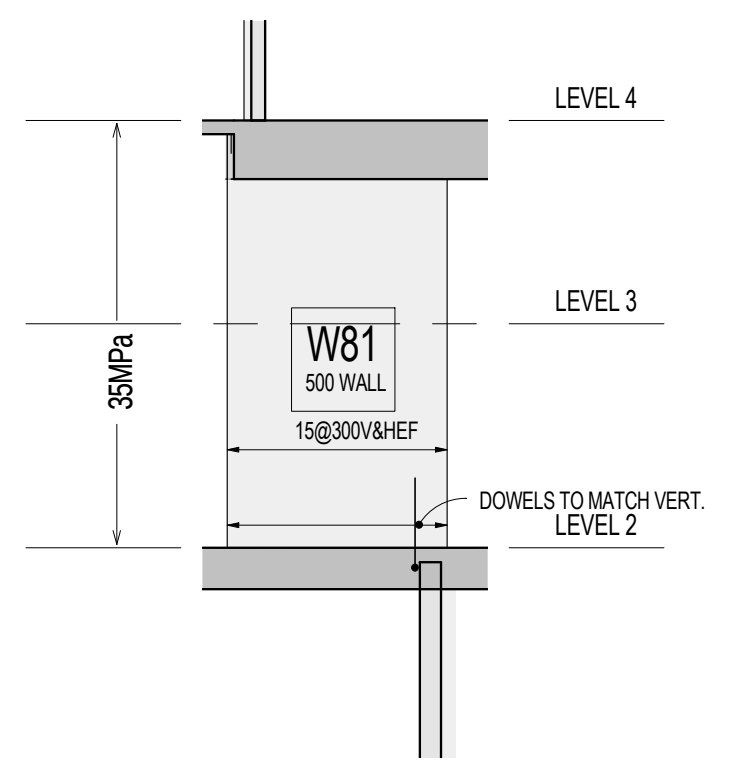
LEVEL 4
LEVEL 3
LEVEL 2
W81
500 WALL
35MPa
DOWELS TO MATCH VERT.

W81 WALL ELEVATION
S3-07 1 : 100

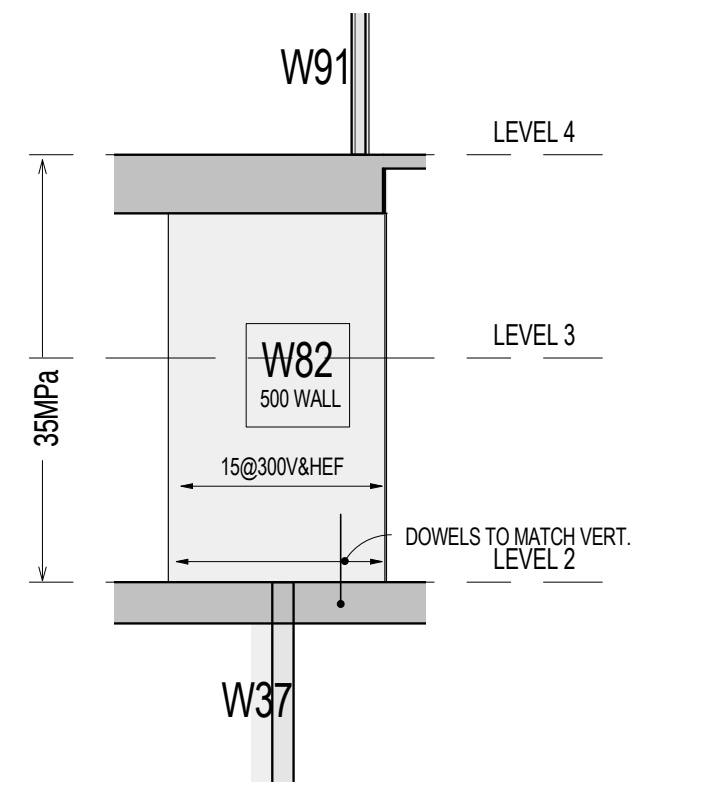
W91
LEVEL 4
LEVEL 3
LEVEL 2
W82
500 WALL
W37
35MPa
DOWELS TO MATCH VERT.

W82 WALL ELEVATION
S3-07 1 : 100

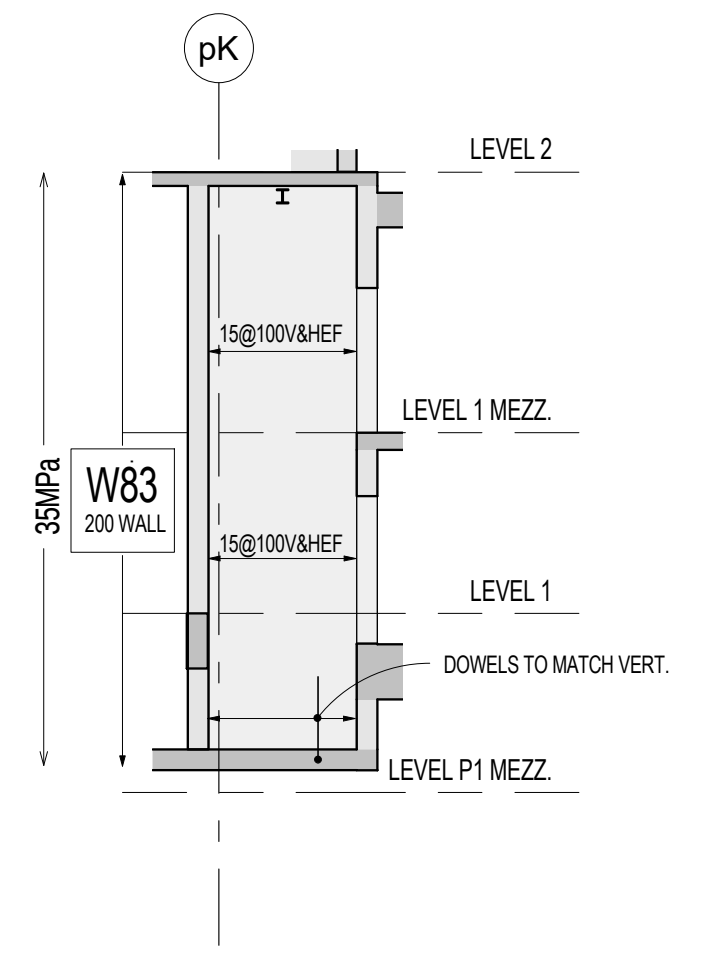
pK
LEVEL 2
LEVEL 1 MEZZ.
LEVEL 1
LEVEL P1 MEZZ
W83
200 WALL
35MPa
DOWELS TO MATCH VERT.

W83 WALL ELEVATION
S3-07 1 : 100

REFER TO NOTES ON SHEET S3-01

Contractor Must Check And Verify All Dimensions On The Job.

Do Not Scale The Drawings.

All Drawings, Specifications And Related Documents Are The Copyright Of The Architect And Must Be Returned Upon Request.

Reproduction Of Drawings, Specifications And Related Documents In Part Or Whole Is Forbidden Without The Architects Written Permission.

This Drawing Is Not To Be Used For Construction Until Signed ByThe Architect.

Date:

DEC.18,2015 DEC.18,2015

stephenson ENGINEERING
2550 Victoria Park Ave. Suite 602
Toronto ON M2J 5A9 | Tel: (416) 635 9970
www.stephenson-eng.com | info@stephenson-eng.com

No	Revision	Date

No	Issued For	Date
7	ISSUED FOR STEEL TENDER	DEC.18,2015
4	BUILDING PERMIT RESUBMISSION	SEPT.21,2015
3	BUILDING PERMIT RESUBMISSION	JULY 22,2015
2	BUILDING PERMIT SUBMISSION	JUNE 12,2015
1	ISSUED FOR WT REVIEW	MAY 01,2015

AQUAVISTA
AT BAYSIDE TORONTO

Drawing Title
WALL ELEVATIONS

Project
Hines TRIDEL®
AQUAVISTA
Block 3 - R3 & R4
Merchant's Whart
Toronto, ON

Scale
1 : 100
Drawn by
DC
Checked by
BK/BBS
Project No.
20140031
Date
DEC.18,2015
Drawing No.
S3-07

Plot Date: 3/9/2016 10:02:22 AM

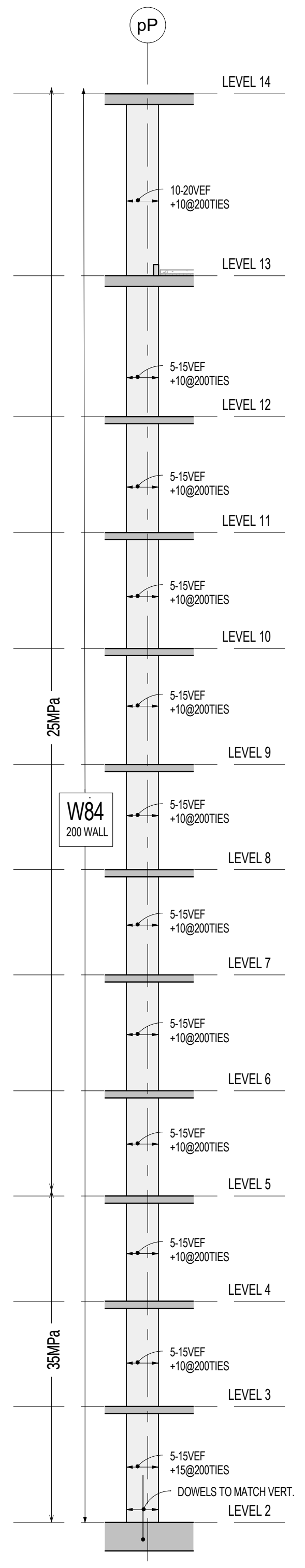
pP
W84
200 WALL
25MPa
35MPa
LEVEL 14
LEVEL 13
LEVEL 12
LEVEL 11
LEVEL 10
LEVEL 9
LEVEL 8
LEVEL 7
LEVEL 6
LEVEL 5
LEVEL 4
LEVEL 3
LEVEL 2
DOWELS TO MATCH VERT.

W84 WALL ELEVATION
S3-08 1 : 100

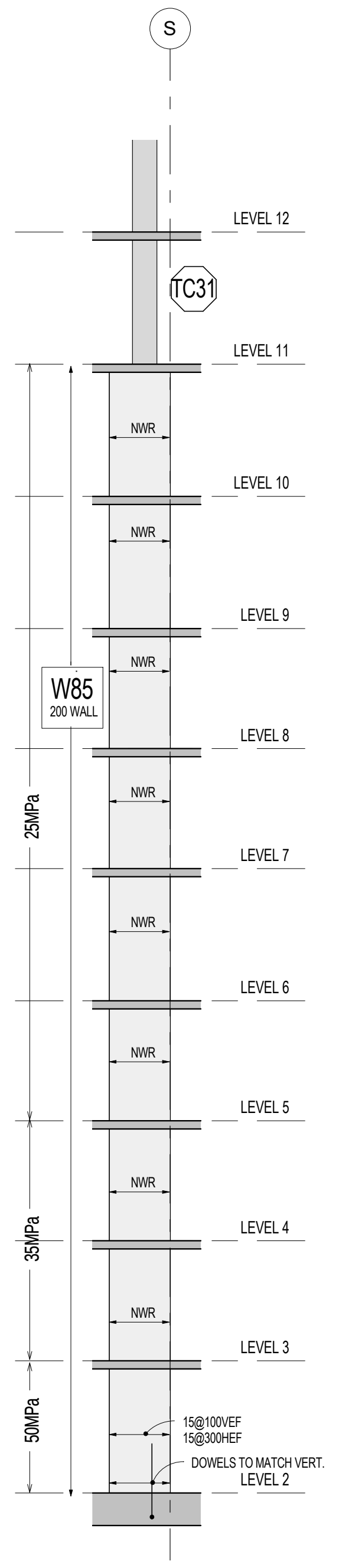
S
TC31
W85
200 WALL
25MPa
35MPa
50MPa
LEVEL 12
LEVEL 11
LEVEL 10
LEVEL 9
LEVEL 8
LEVEL 7
LEVEL 6
LEVEL 5
LEVEL 4
LEVEL 3
LEVEL 2
DOWELS TO MATCH VERT.

W85 WALL ELEVATION
S3-08 1 : 100

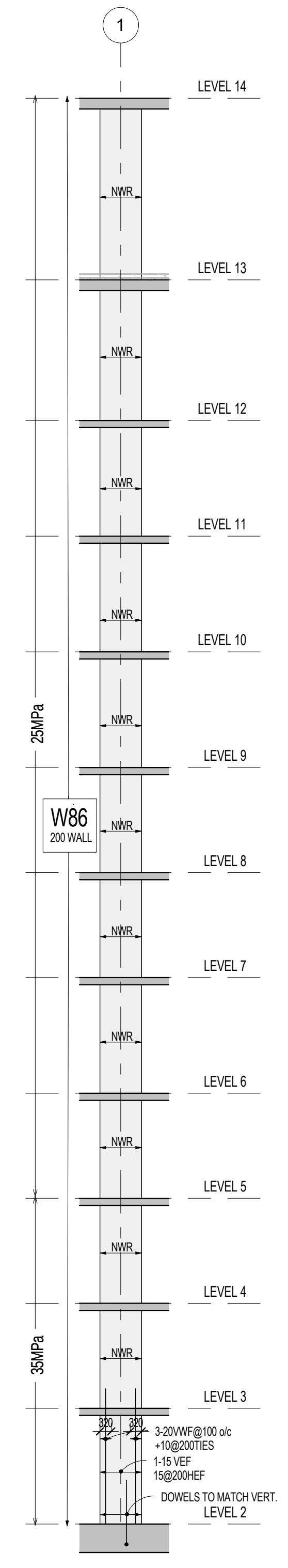
1
W86
200 WALL
25MPa
35MPa
LEVEL 14
LEVEL 13
LEVEL 12
LEVEL 11
LEVEL 10
LEVEL 9
LEVEL 8
LEVEL 7
LEVEL 6
LEVEL 5
LEVEL 4
LEVEL 3
LEVEL 2
DOWELS TO MATCH VERT.

W86 WALL ELEVATION
S3-08 1 : 100

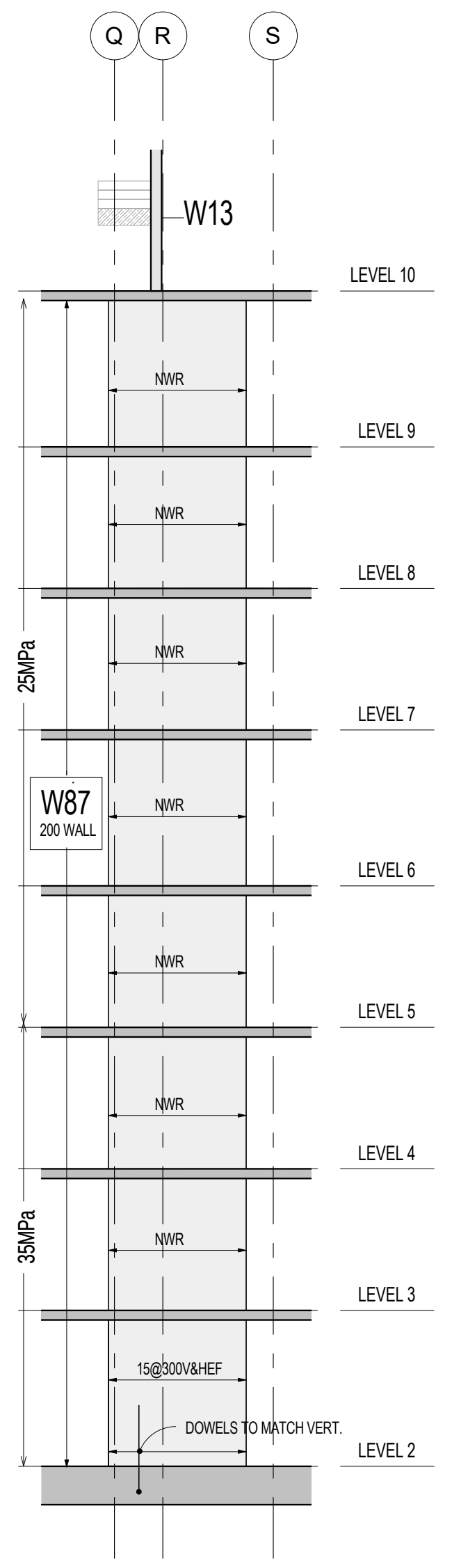
Q
R
S
W13
W87
200 WALL
25MPa
35MPa
LEVEL 10
LEVEL 9
LEVEL 8
LEVEL 7
LEVEL 6
LEVEL 5
LEVEL 4
LEVEL 3
LEVEL 2
DOWELS TO MATCH VERT.

W87 WALL ELEVATION
S3-08 1 : 100

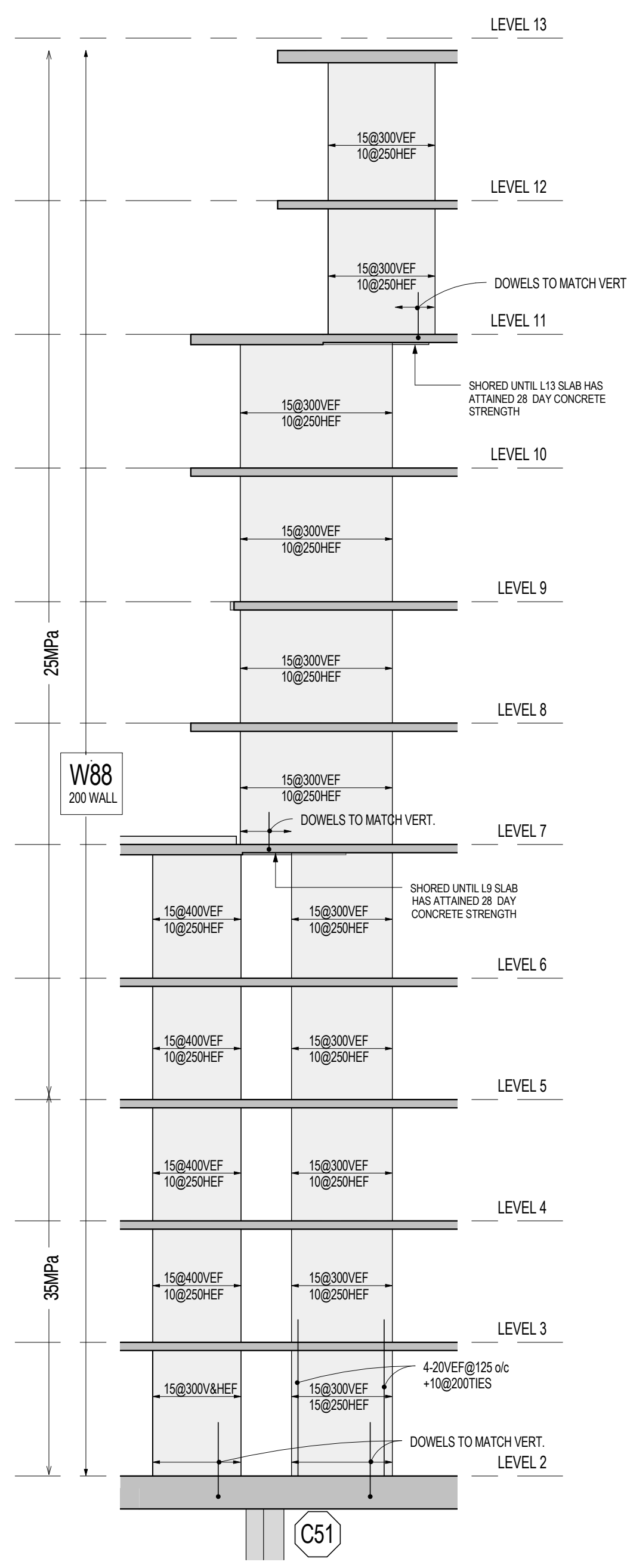
W88
200 WALL
25MPa
35MPa
LEVEL 13
LEVEL 12
LEVEL 11
LEVEL 10
LEVEL 9
LEVEL 8
LEVEL 7
LEVEL 6
LEVEL 5
LEVEL 4
LEVEL 3
LEVEL 2
DOWELS TO MATCH VERT.
C51

W88 WALL ELEVATION
S3-08 1 : 100

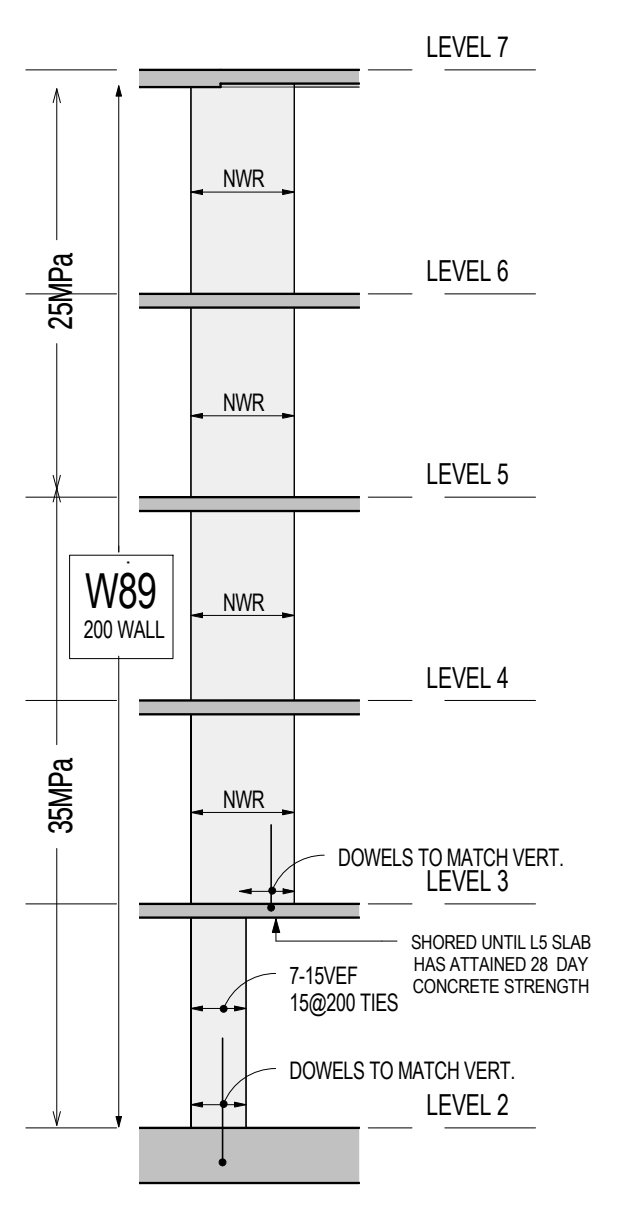
W89
200 WALL
25MPa
35MPa
LEVEL 7
LEVEL 6
LEVEL 5
LEVEL 4
LEVEL 3
LEVEL 2
DOWELS TO MATCH VERT.

W89 WALL ELEVATION
S3-08 1 : 100

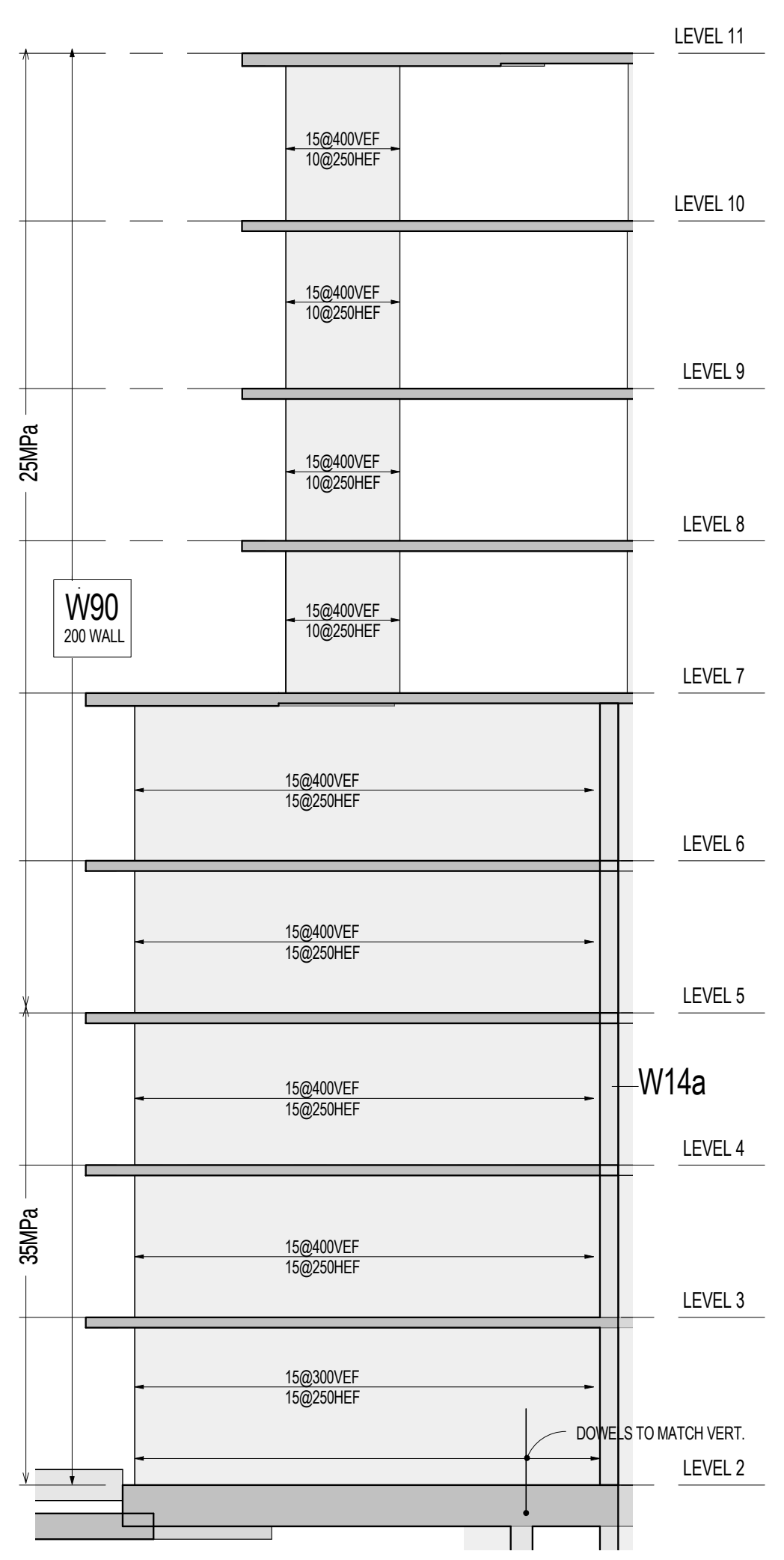
W90
200 WALL
25MPa
35MPa
W14a
LEVEL 11
LEVEL 10
LEVEL 9
LEVEL 8
LEVEL 7
LEVEL 6
LEVEL 5
LEVEL 4
LEVEL 3
LEVEL 2
DOWELS TO MATCH VERT.

W90 WALL ELEVATION
S3-08 1 : 100

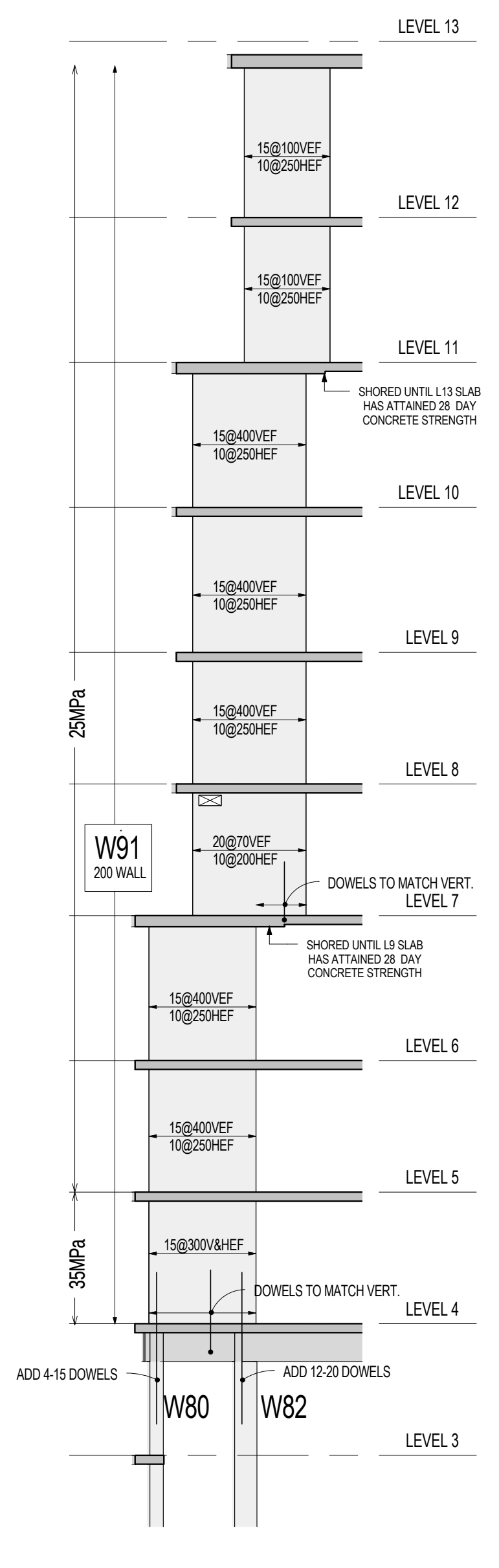
W91
200 WALL
25MPa
35MPa
W80
W82
LEVEL 13
LEVEL 12
LEVEL 11
LEVEL 10
LEVEL 9
LEVEL 8
LEVEL 7
LEVEL 6
LEVEL 5
LEVEL 4
LEVEL 3
DOWELS TO MATCH VERT.

W91 WALL ELEVATION
S3-08 1 : 100

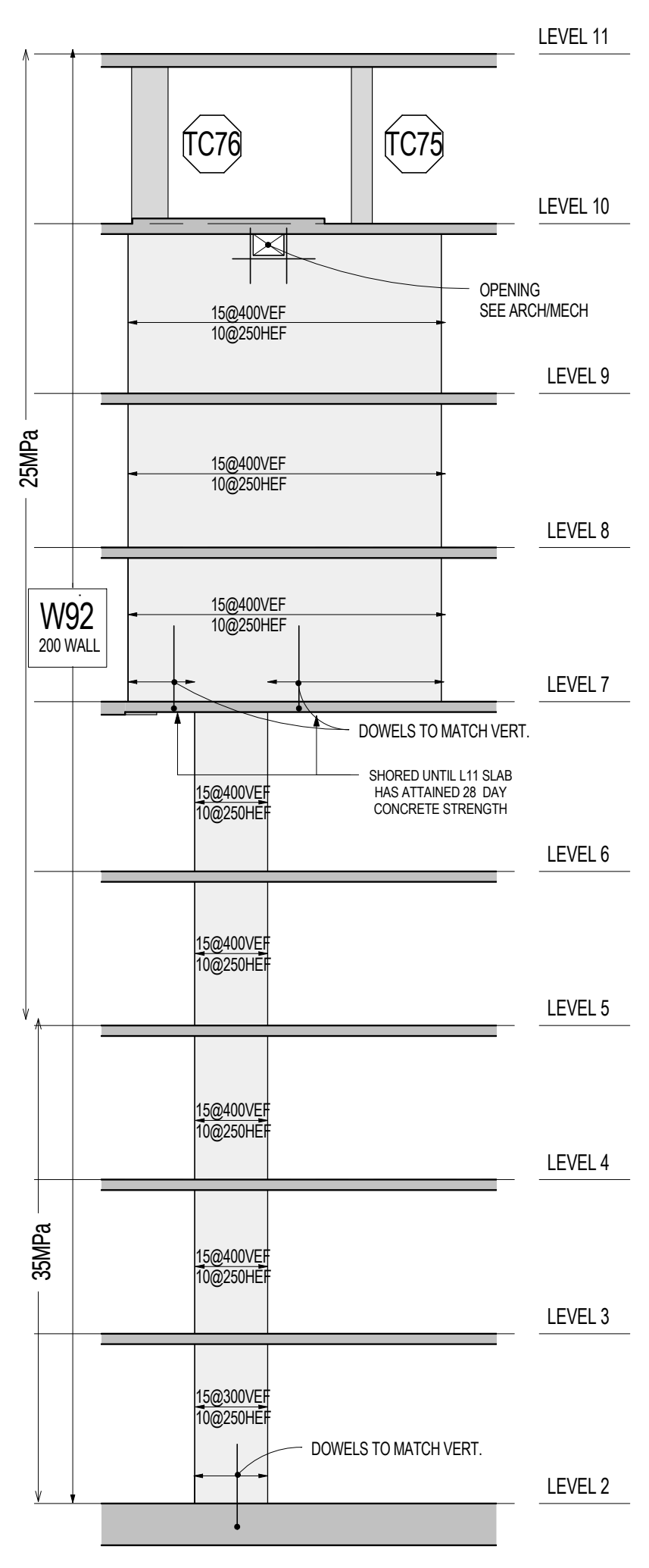
TC76
TC75
W92
200 WALL
25MPa
35MPa
OPENING SEE ARCH/MECH
LEVEL 11
LEVEL 10
LEVEL 9
LEVEL 8
LEVEL 7
LEVEL 6
LEVEL 5
LEVEL 4
LEVEL 3
LEVEL 2
DOWELS TO MATCH VERT.

W92 WALL ELEVATION
S3-08 1 : 100

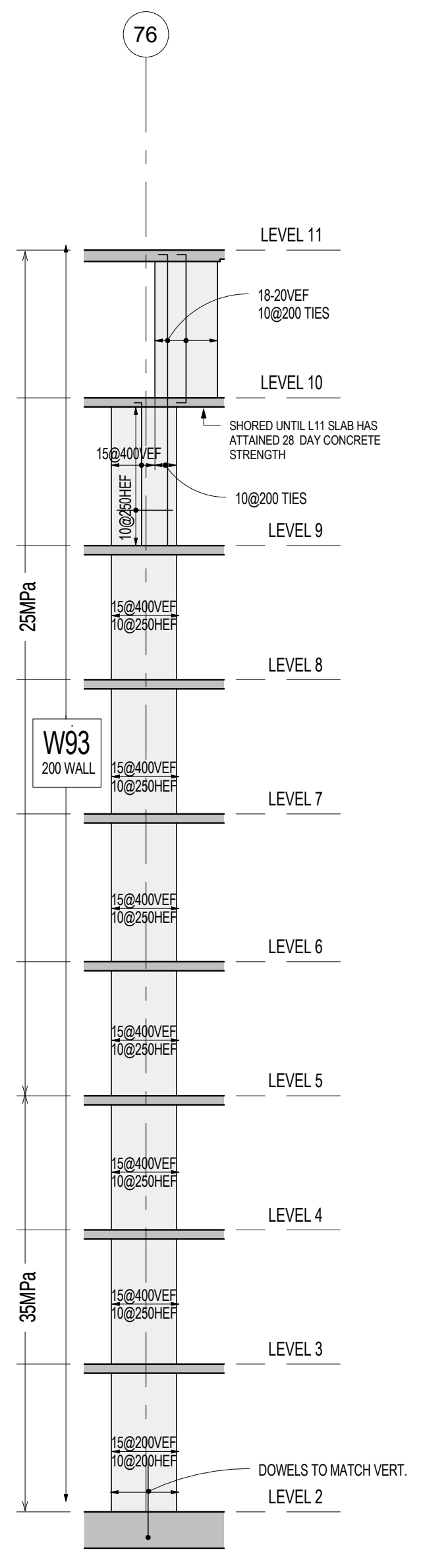
76
W93
200 WALL
25MPa
35MPa
LEVEL 11
LEVEL 10
LEVEL 9
LEVEL 8
LEVEL 7
LEVEL 6
LEVEL 5
LEVEL 4
LEVEL 3
LEVEL 2
DOWELS TO MATCH VERT.

W93 WALL ELEVATION
S3-08 1 : 100

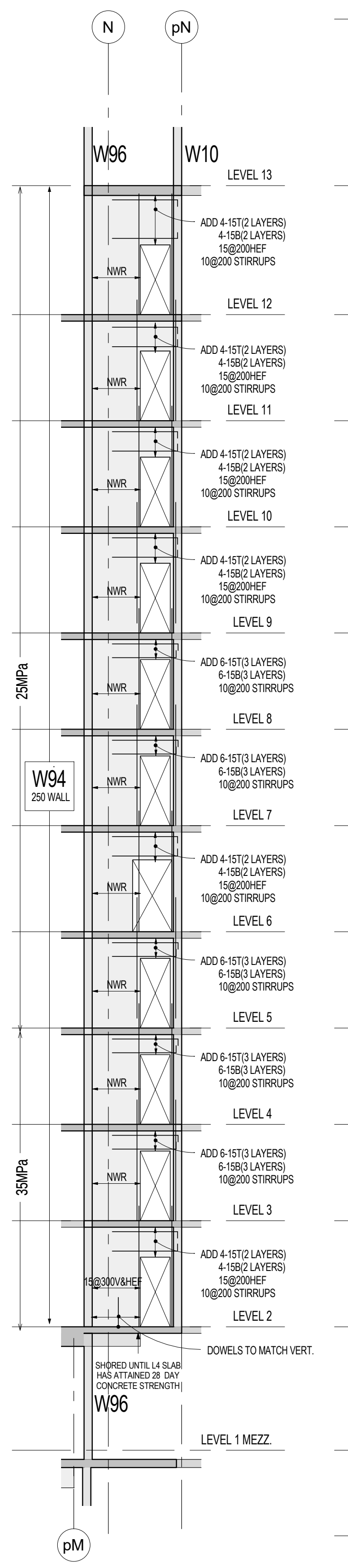
N
pN
W96
W10
W94
250 WALL
25MPa
35MPa
W96
pM
LEVEL 13
LEVEL 12
LEVEL 11
LEVEL 10
LEVEL 9
LEVEL 8
LEVEL 7
LEVEL 6
LEVEL 5
LEVEL 4
LEVEL 3
LEVEL 2
LEVEL 1 MEZZ.
DOWELS TO MATCH VERT.

W94 WALL ELEVATION
S3-08 1 : 100

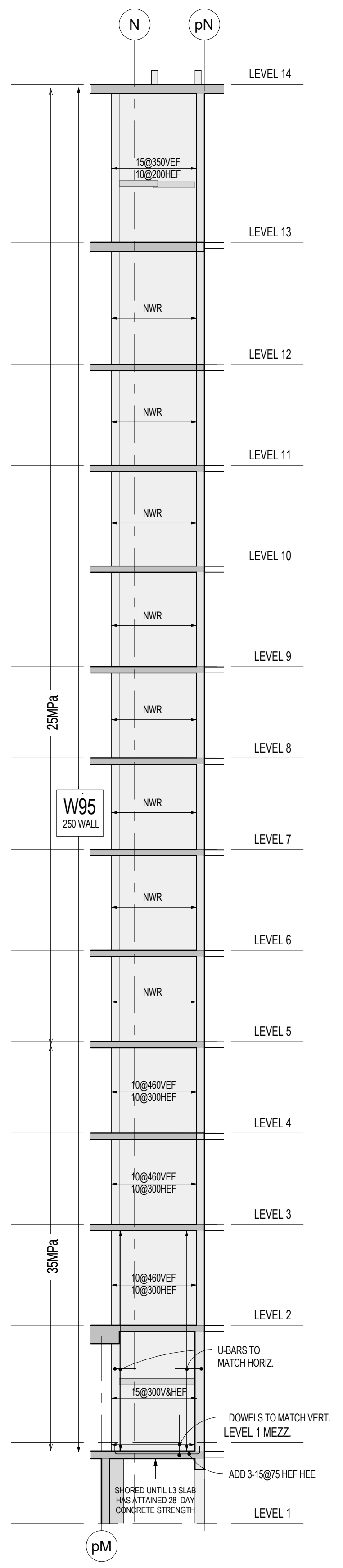
N
pN
W95
250 WALL
25MPa
35MPa
pM
LEVEL 14
LEVEL 13
LEVEL 12
LEVEL 11
LEVEL 10
LEVEL 9
LEVEL 8
LEVEL 7
LEVEL 6
LEVEL 5
LEVEL 4
LEVEL 3
LEVEL 2
LEVEL 1 MEZZ.
LEVEL 1
DOWELS TO MATCH VERT.

W95 WALL ELEVATION
S3-08 1 : 100

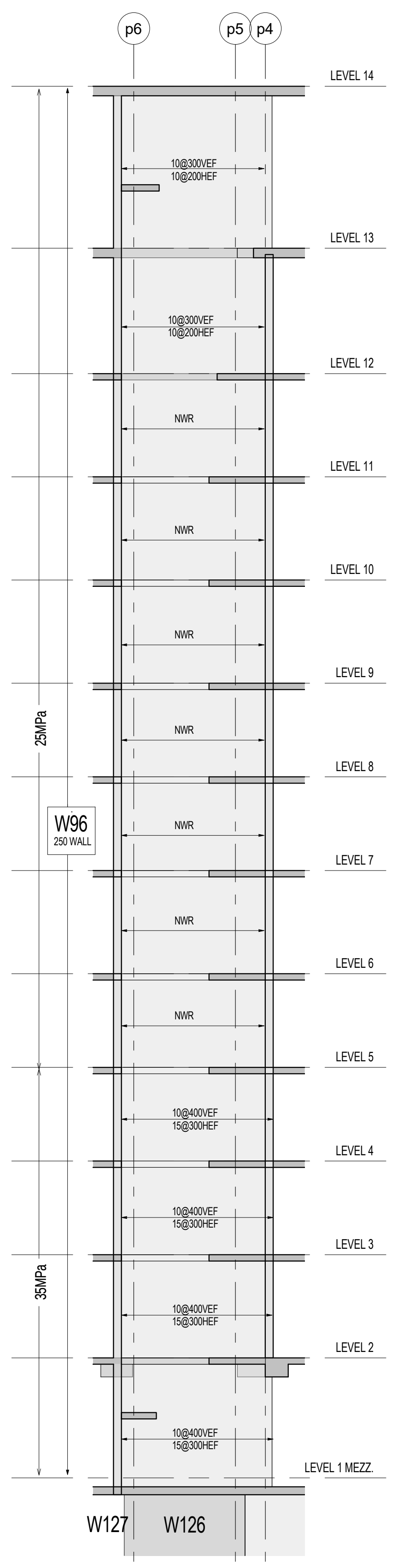
p6
p5
p4
W96
250 WALL
25MPa
35MPa
W127
W126
LEVEL 14
LEVEL 13
LEVEL 12
LEVEL 11
LEVEL 10
LEVEL 9
LEVEL 8
LEVEL 7
LEVEL 6
LEVEL 5
LEVEL 4
LEVEL 3
LEVEL 2
LEVEL 1 MEZZ.

W96 WALL ELEVATION
S3-08 1 : 100

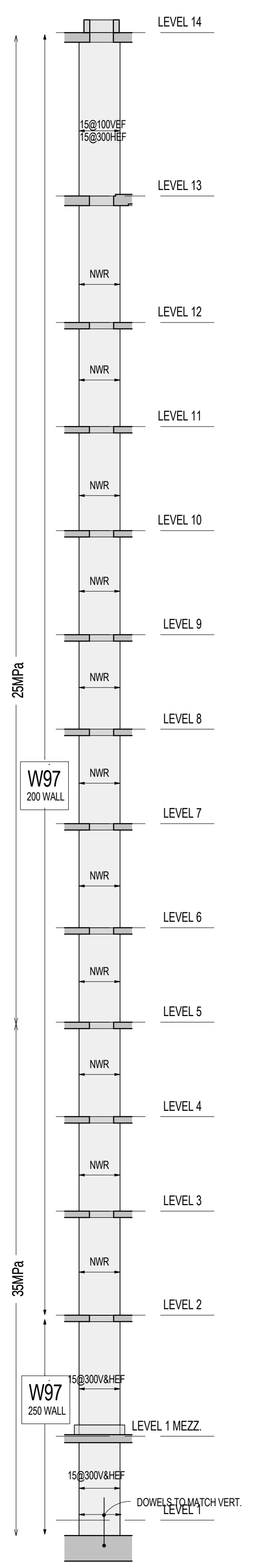
W97
250 WALL
25MPa
35MPa
LEVEL 14
LEVEL 13
LEVEL 12
LEVEL 11
LEVEL 10
LEVEL 9
LEVEL 8
LEVEL 7
LEVEL 6
LEVEL 5
LEVEL 4
LEVEL 3
LEVEL 2
LEVEL 1 MEZZ.
LEVEL 1

W97 WALL ELEVATION
S3-08 1 : 100

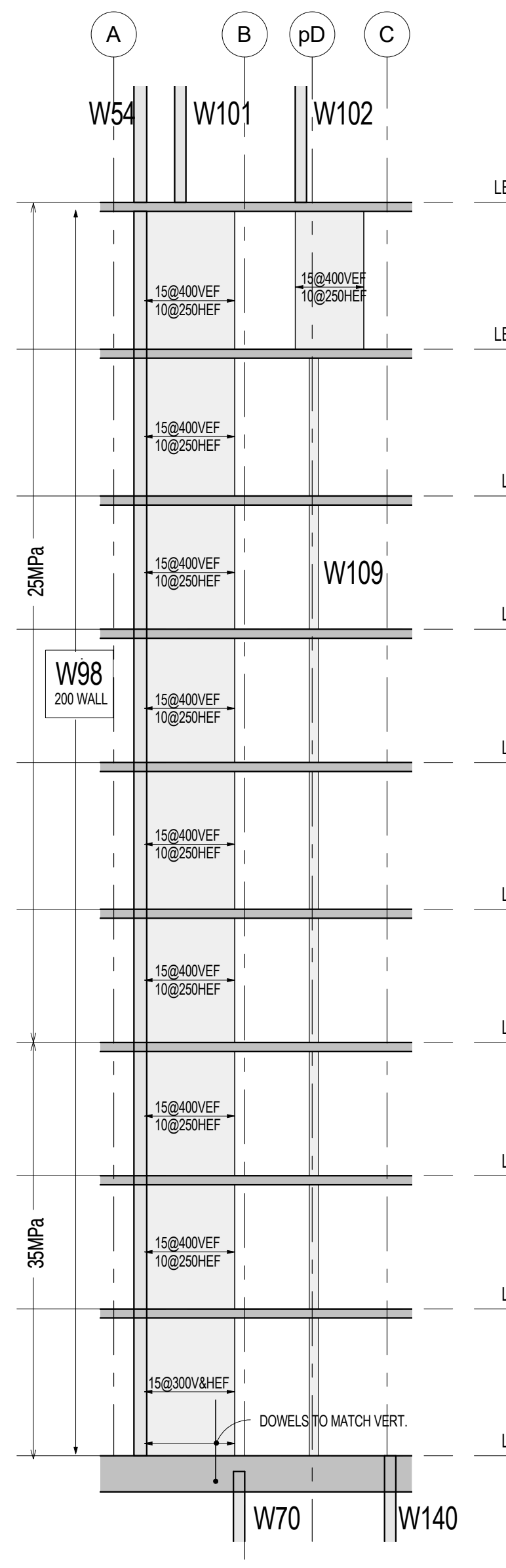
A
B
pD
C
W54
W101
W102
W98
200 WALL
W109
25MPa
35MPa
W70
W140
LEVEL 11
LEVEL 10
LEVEL 9
LEVEL 8
LEVEL 7
LEVEL 6
LEVEL 5
LEVEL 4
LEVEL 3
LEVEL 2
DOWELS TO MATCH VERT.

W98 WALL ELEVATION
S3-08 1 : 100

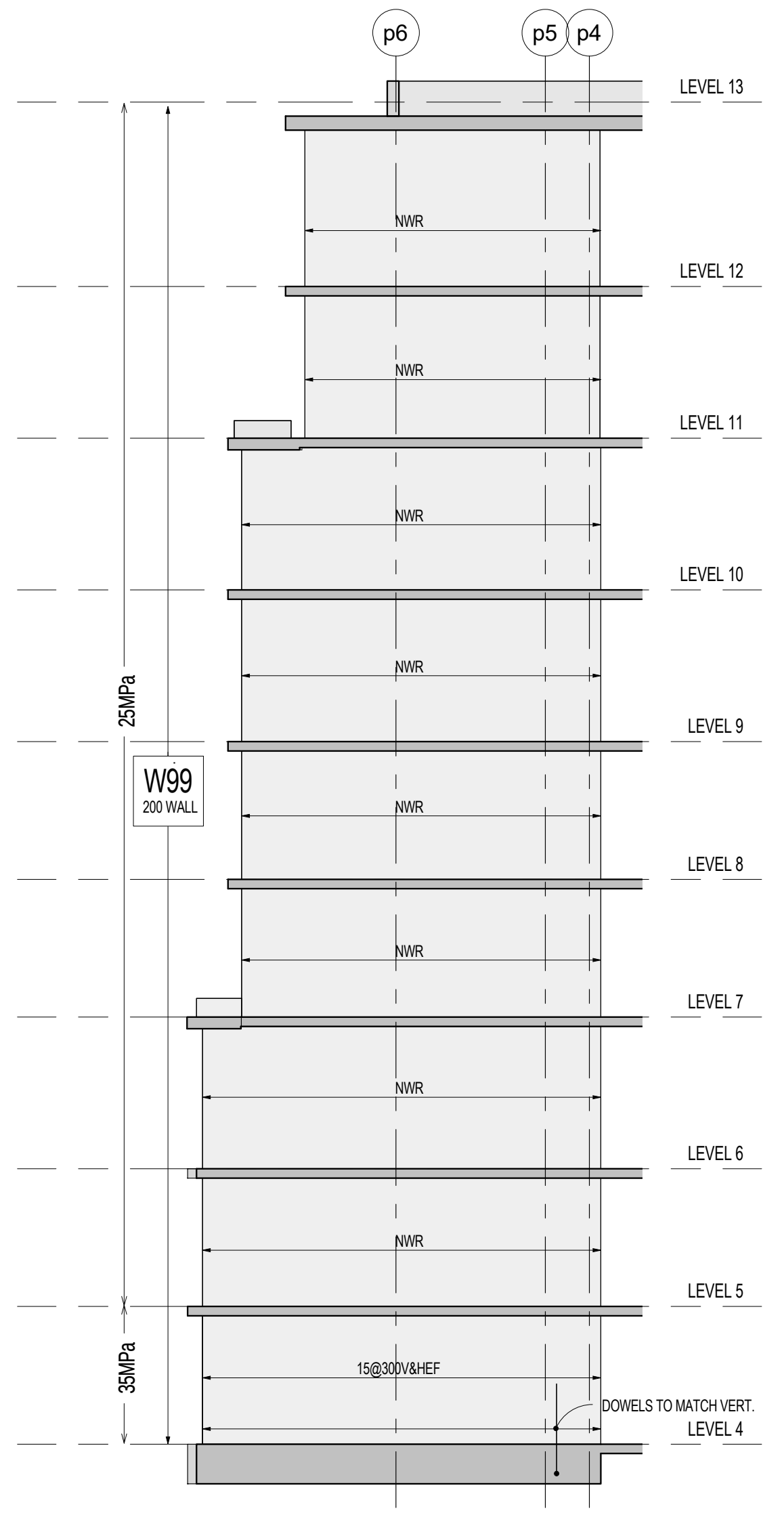
p6
p5
p4
W99
200 WALL
25MPa
35MPa
LEVEL 13
LEVEL 12
LEVEL 11
LEVEL 10
LEVEL 9
LEVEL 8
LEVEL 7
LEVEL 6
LEVEL 5
LEVEL 4
DOWELS TO MATCH VERT.

W99 WALL ELEVATION
S3-08 1 : 100

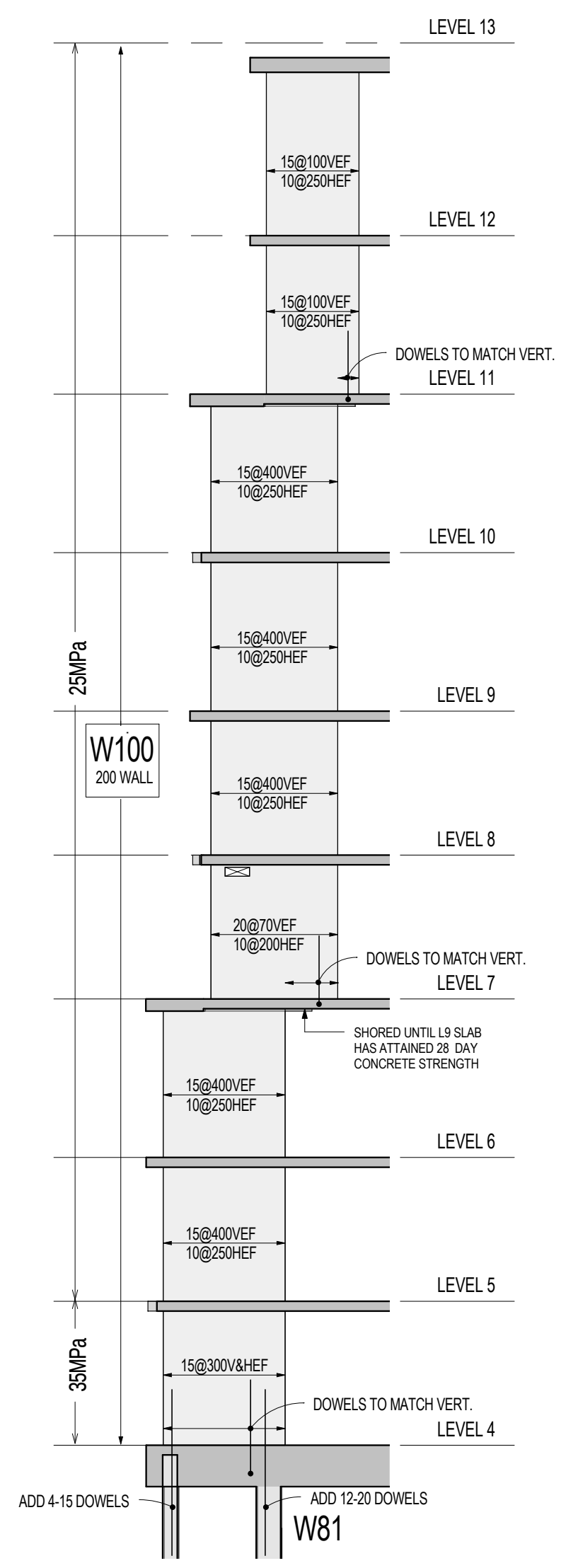
W100
200 WALL
25MPa
35MPa
W81
LEVEL 13
LEVEL 12
LEVEL 11
LEVEL 10
LEVEL 9
LEVEL 8
LEVEL 7
LEVEL 6
LEVEL 5
LEVEL 4
DOWELS TO MATCH VERT.
ADD 4-15 DOWELS
ADD 12-20 DOWELS

W100 WALL ELEVATION
S3-08 1 : 100

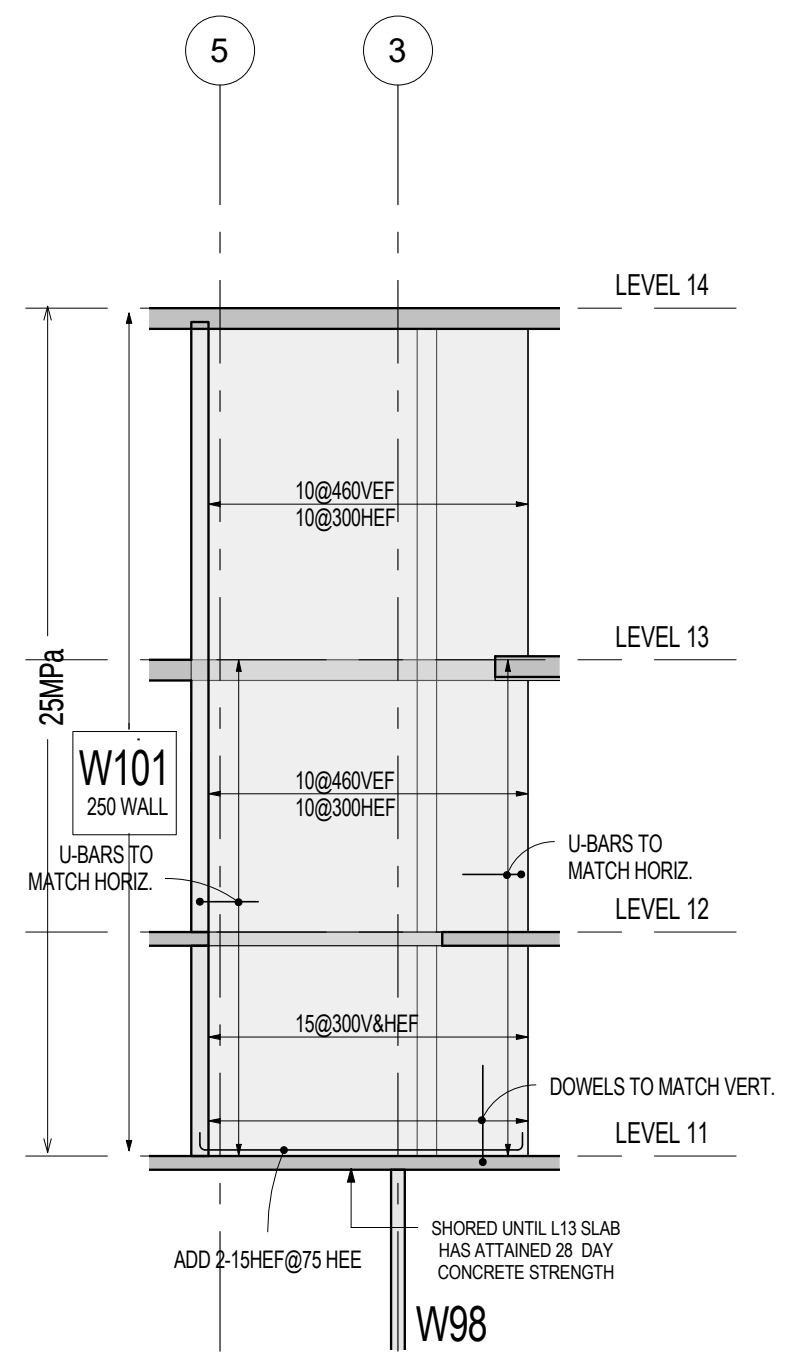
5
3
W101
250 WALL
U-BARS TO MATCH HORIZ.
25MPa
W98
LEVEL 14
LEVEL 13
LEVEL 12
LEVEL 11
DOWELS TO MATCH VERT.

W101 WALL ELEVATION
S3-08 1 : 100

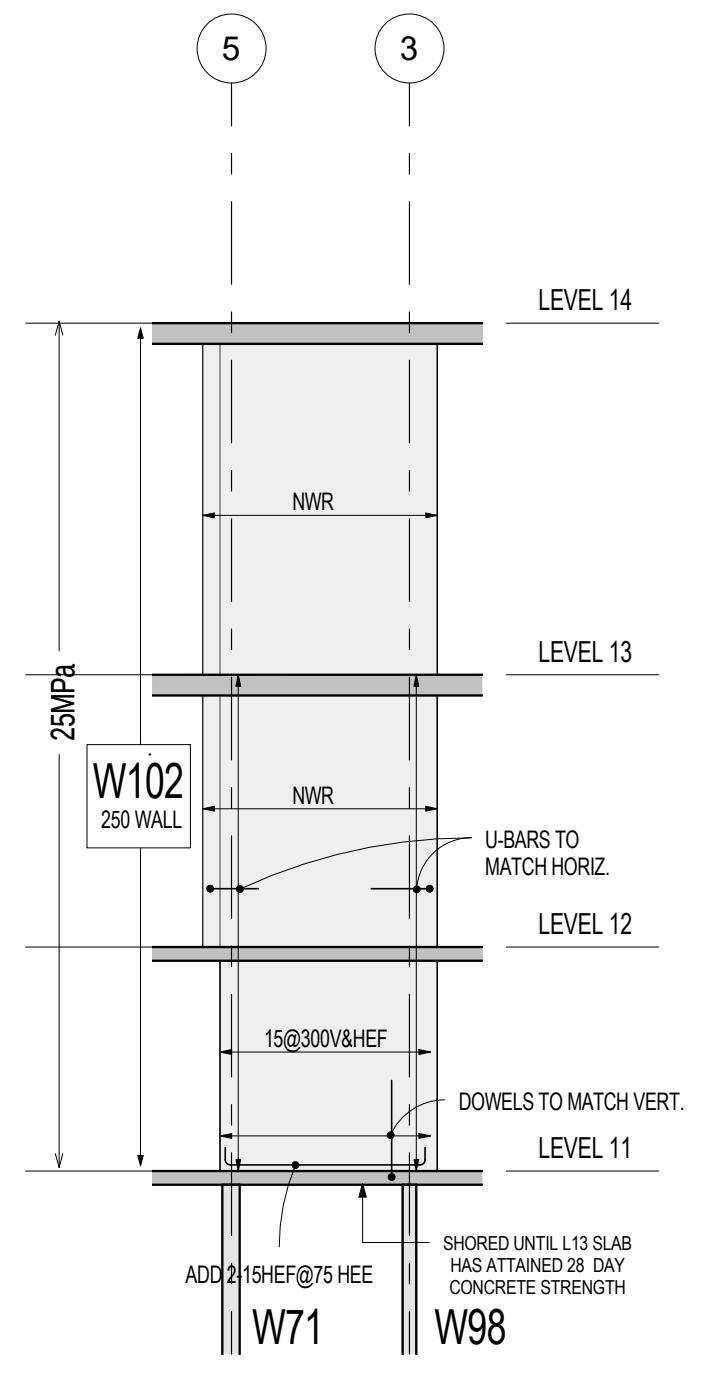
5
3
W102
250 WALL
25MPa
W71
W98
LEVEL 14
LEVEL 13
LEVEL 12
LEVEL 11
U-BARS TO MATCH HORIZ.
DOWELS TO MATCH VERT.

W102 WALL ELEVATION
S3-08 1 : 100

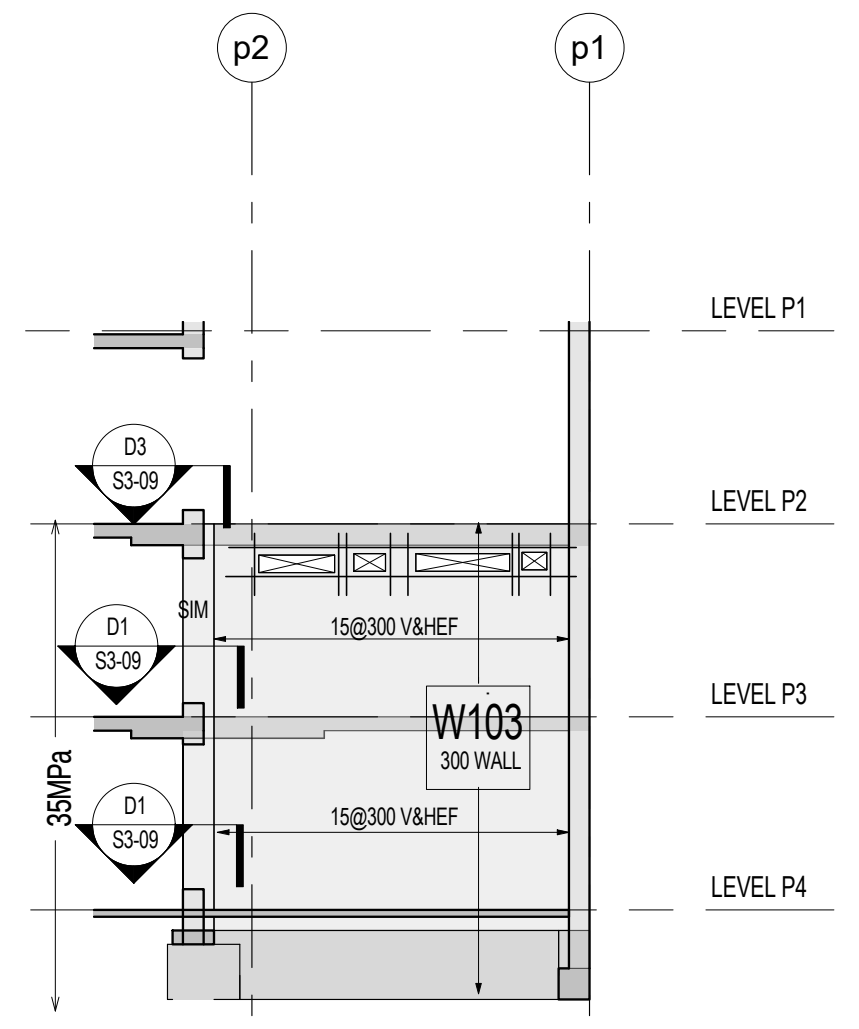
p2
p1
W103
300 WALL
35MPa
LEVEL P1
LEVEL P2
LEVEL P3
LEVEL P4

W103 WALL ELEVATION
S3-08 1 : 100

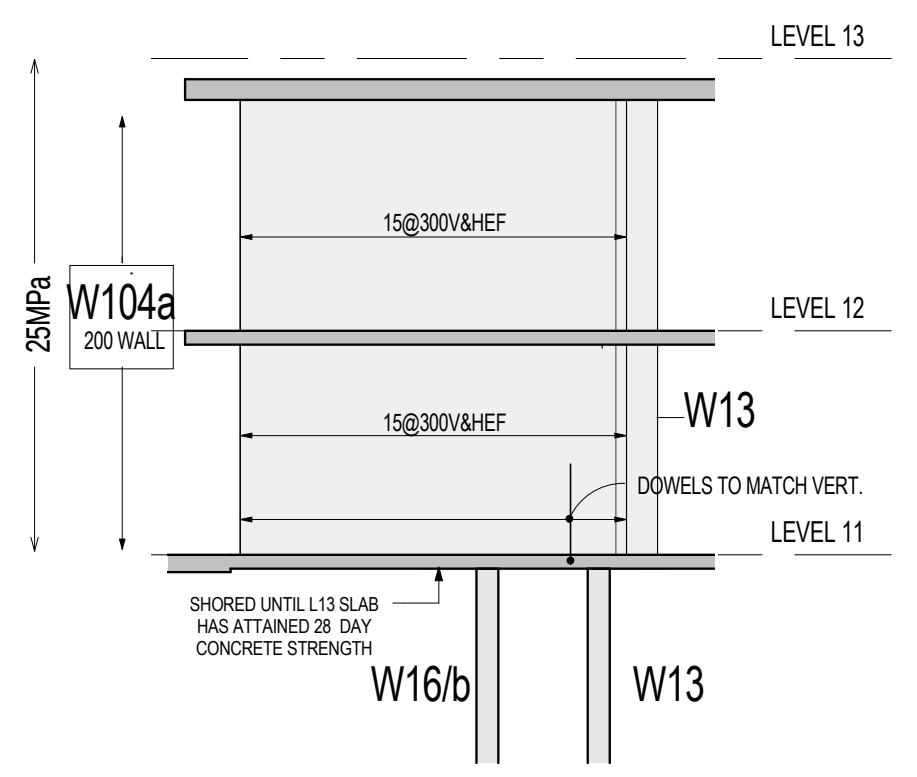
W104a
200 WALL
25MPa
W13
W16/b
W13
LEVEL 13
LEVEL 12
LEVEL 11
DOWELS TO MATCH VERT.

W104 WALL ELEVATION
S3-08 1 : 100

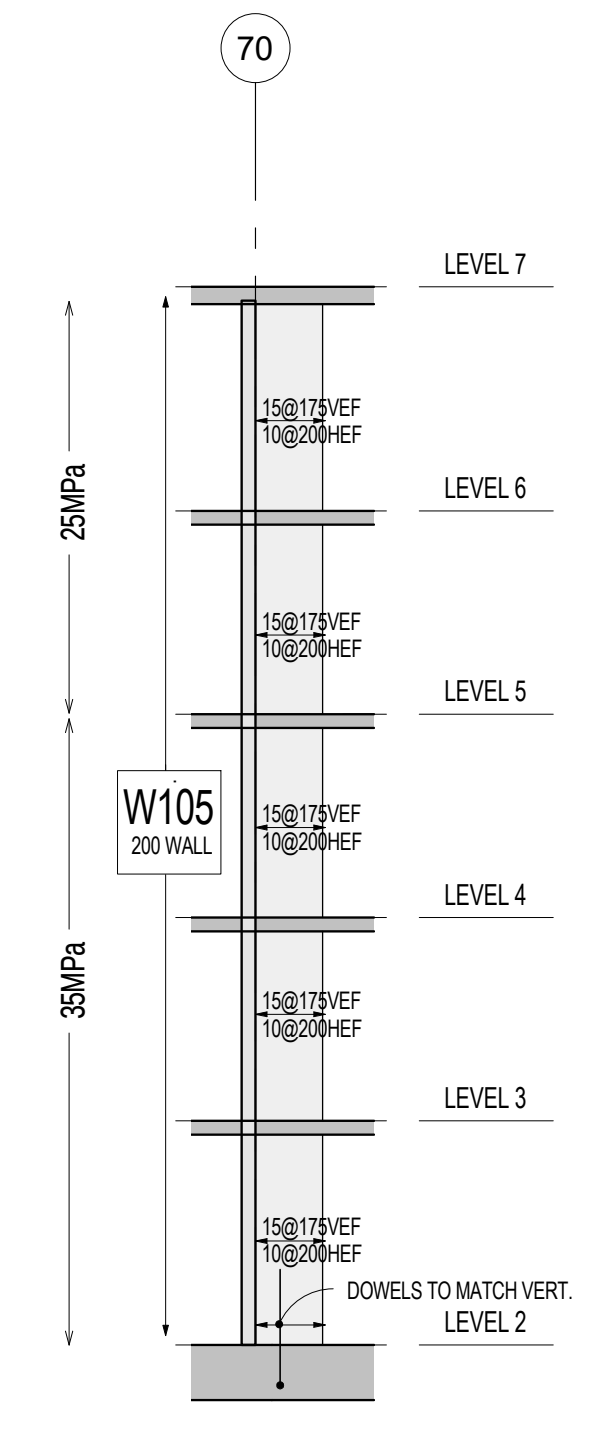
70
W105
200 WALL
25MPa
35MPa
LEVEL 7
LEVEL 6
LEVEL 5
LEVEL 4
LEVEL 3
LEVEL 2
DOWELS TO MATCH VERT.

W105 WALL ELEVATION
S3-08 1 : 100

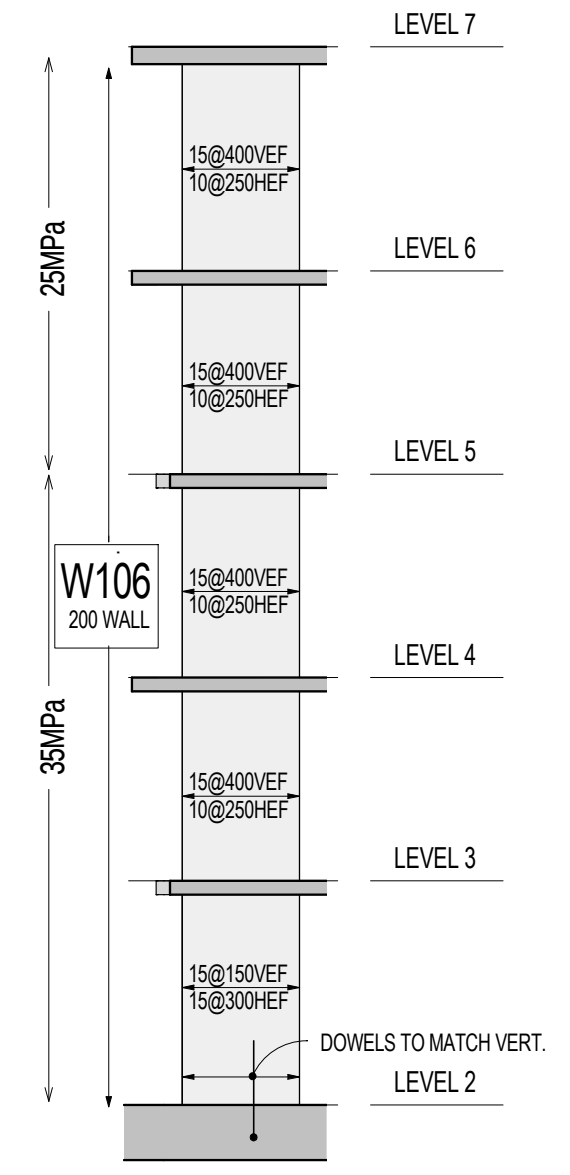
W106
200 WALL
25MPa
35MPa
LEVEL 7
LEVEL 6
LEVEL 5
LEVEL 4
LEVEL 3
LEVEL 2
DOWELS TO MATCH VERT.

W106 WALL ELEVATION
S3-08 1 : 100

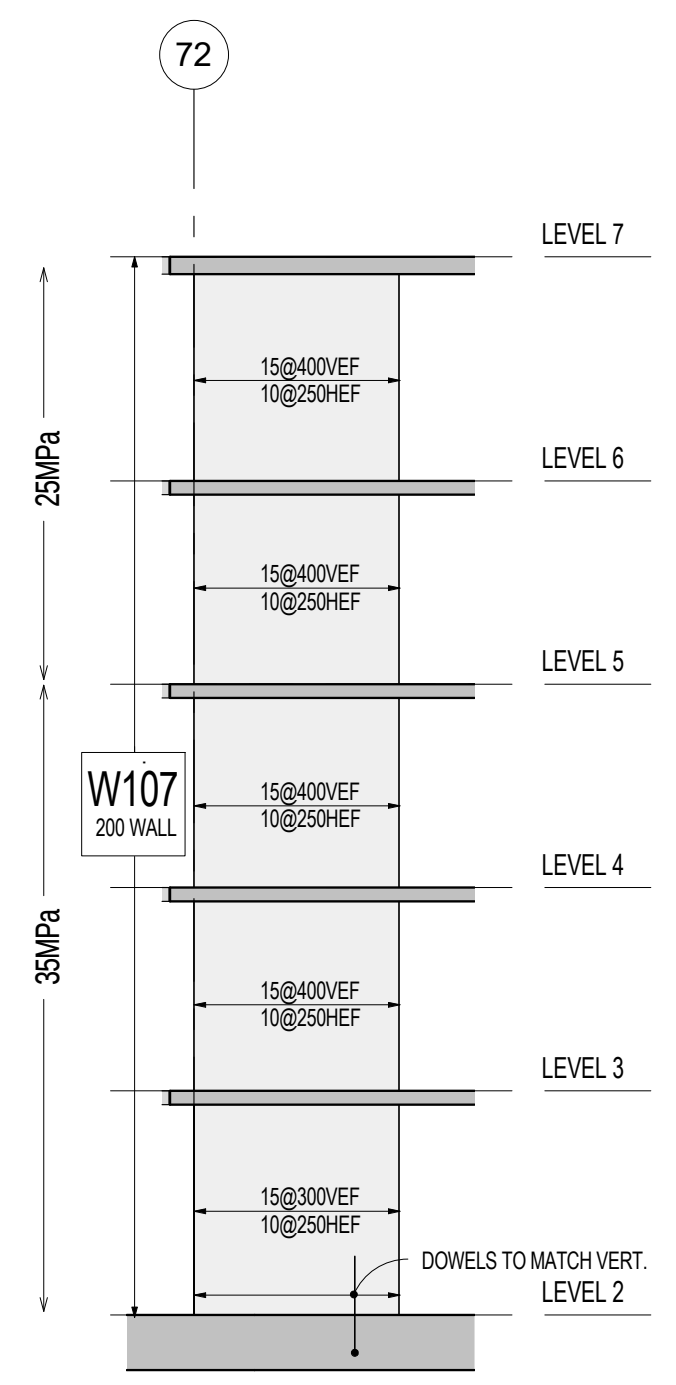
72
W107
200 WALL
25MPa
35MPa
LEVEL 7
LEVEL 6
LEVEL 5
LEVEL 4
LEVEL 3
LEVEL 2
DOWELS TO MATCH VERT.

W107 WALL ELEVATION
S3-08 1 : 100

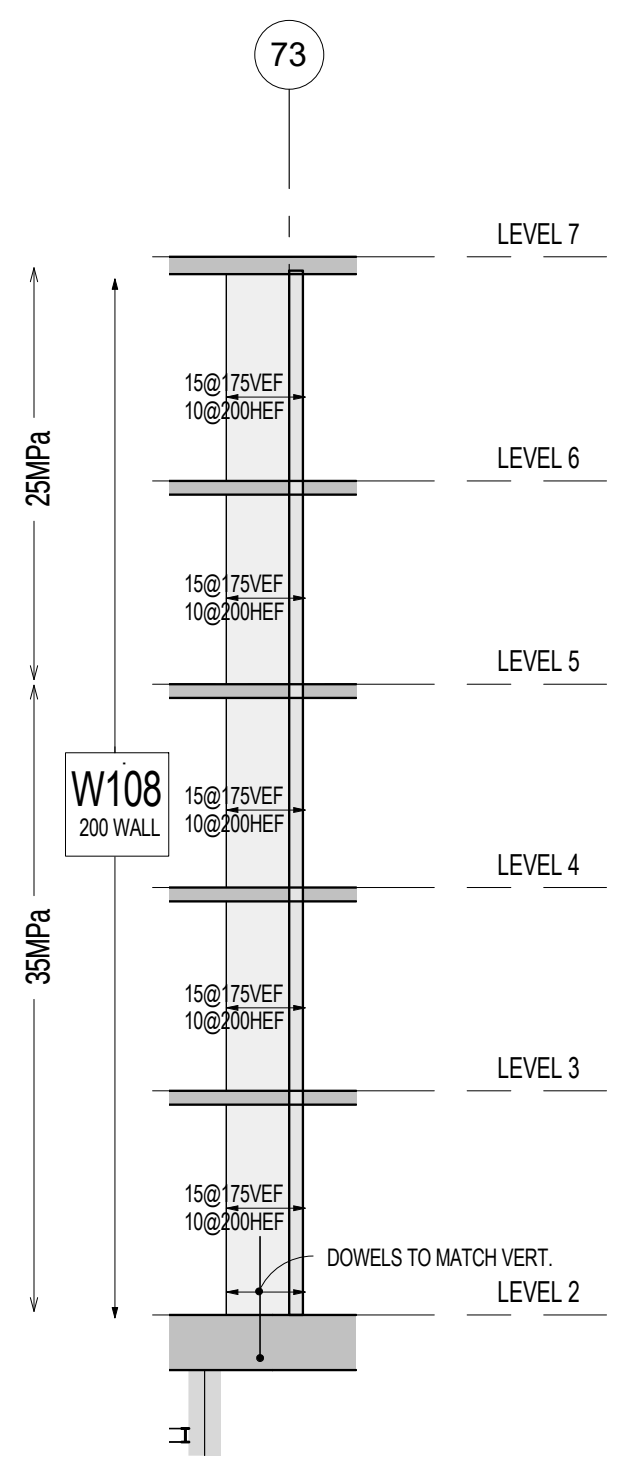
73
W108
200 WALL
25MPa
35MPa
LEVEL 7
LEVEL 6
LEVEL 5
LEVEL 4
LEVEL 3
LEVEL 2
DOWELS TO MATCH VERT.

W108 WALL ELEVATION
S3-08 1 : 100

REFER TO NOTES ON SHEET S3-01

Contractor Must Check And Verify All Dimensions On The Job.

Do Not Scale The Drawings.

All Drawings, Specifications And Related Documents Are The Copyright Of The Architect And Must Be Returned Upon Request.

Reproduction Of Drawings, Specifications And Related Documents In Part Or Whole Is Forbidden Without The Architects Written Permission.

This Drawing Is Not To Be Used For Construction Until Signed ByThe Architect.

Date:

DEC.18,2015 DEC.18,2015

stephenson ENGINEERING
2550 Victoria Park Ave. Suite 602
Toronto ON M2J 5A9 | Tel: (416) 635 9970
www.stephenson-eng.com | info@stephenson-eng.com

No	Revision	Date

No	Issued For	Date
7	ISSUED FOR STEEL TENDER	DEC.18,2015
4	BUILDING PERMIT RESUBMISSION	SEPT.21,2015
3	BUILDING PERMIT RESUBMISSION	JULY 22,2015
2	BUILDING PERMIT SUBMISSION	JUNE 12,2015
1	ISSUED FOR WT REVIEW	MAY 01,2015

AQUAVISTA
AT BAYSIDE TORONTO

Drawing Title
WALL ELEVATIONS

Project
Hines TRIDEL®
AQUAVISTA
Block 3 - R3 & R4
Merchant's Whart
Toronto, ON

Scale
1 : 100
Drawn by
DC
Checked by
BK/BBS
Project No.
20140031
Date
DEC.18,2015
Drawing No.
S3-08

Plot Date: 3/9/2016 10:02:29 AM

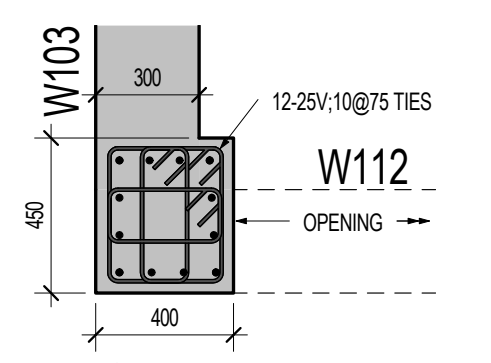
W103
W112
12-20V,10@75 TIES
OPENING
400

D1 DETAIL
S3-09 1 : 20

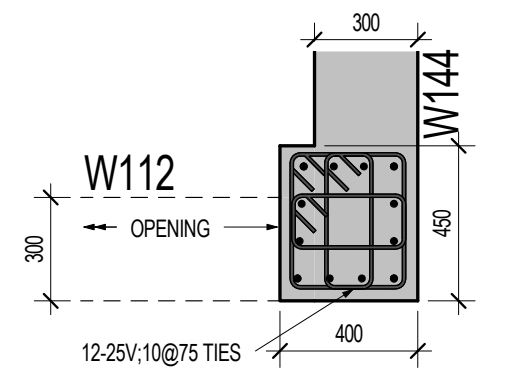
W112
W114
OPENING
12-25V,10@75 TIES
300
400

D2 DETAIL
S3-09 1 : 20

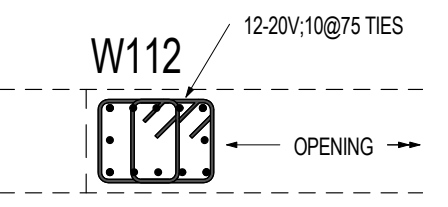
W112
12-20V,10@75 TIES
OPENING

D3 DETAIL
S3-09 1 : 20

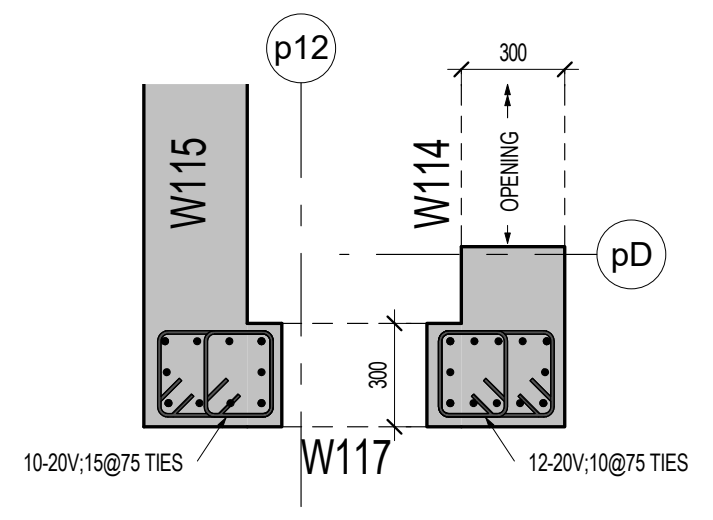
p12
W115
W114
OPENING
pD
W117
10-20V,10@75 TIES
12-20V,10@75 TIES
300

D4 DETAIL
S3-09 1 : 20

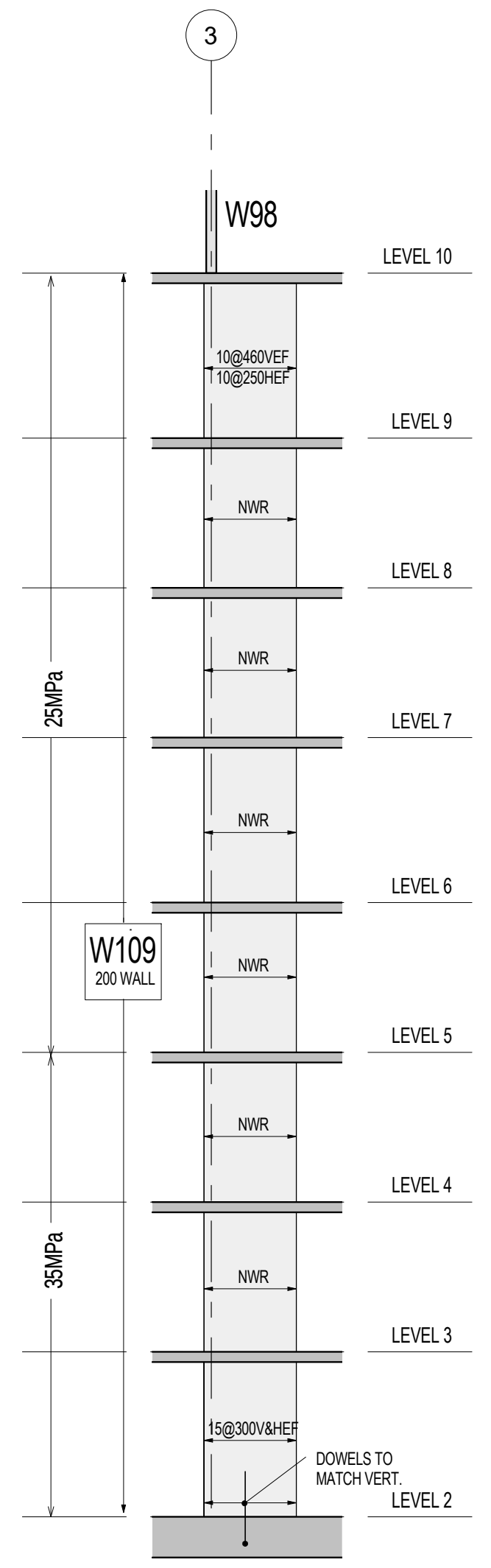
3
W98
LEVEL 10
LEVEL 9
LEVEL 8
LEVEL 7
LEVEL 6
LEVEL 5
LEVEL 4
LEVEL 3
LEVEL 2
W109
300 WALL
25MPa
35MPa
DOWELS TO MATCH VERT.

W109 WALL ELEVATION
S3-09 1 : 100

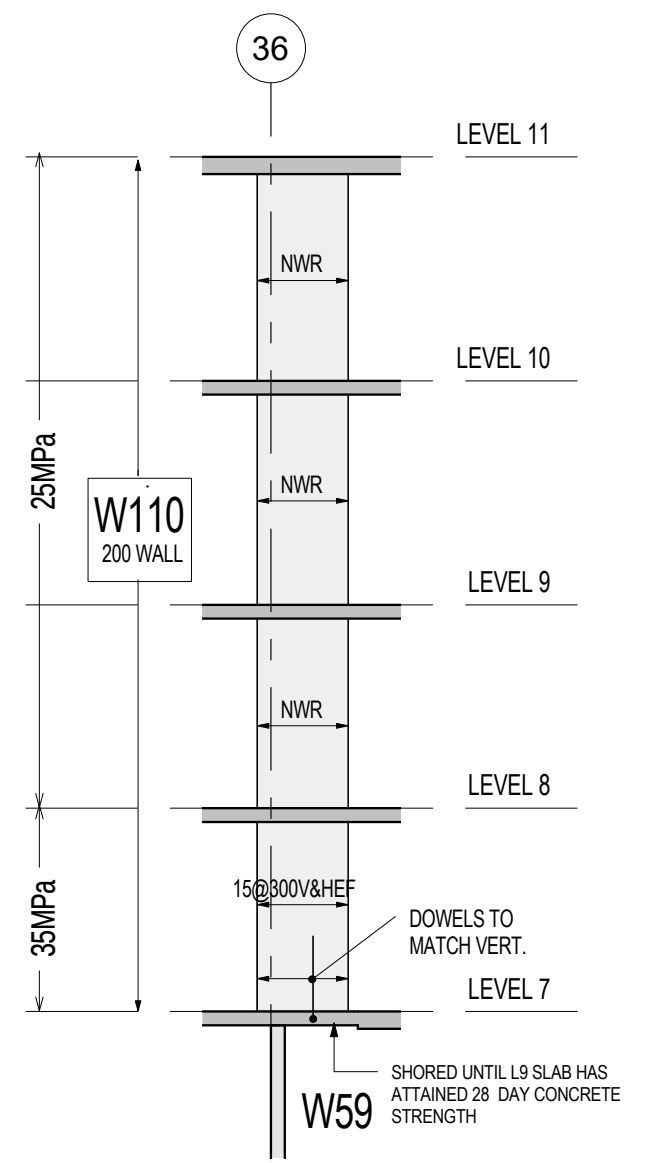
36
LEVEL 11
LEVEL 10
LEVEL 9
LEVEL 8
W110
200 WALL
25MPa
35MPa
DOWELS TO MATCH VERT.
W59
SHORED UNTIL L9 SLAB HAS ATTAINED 28 DAY CONCRETE STRENGTH

W110 WALL ELEVATION
S3-09 1 : 100

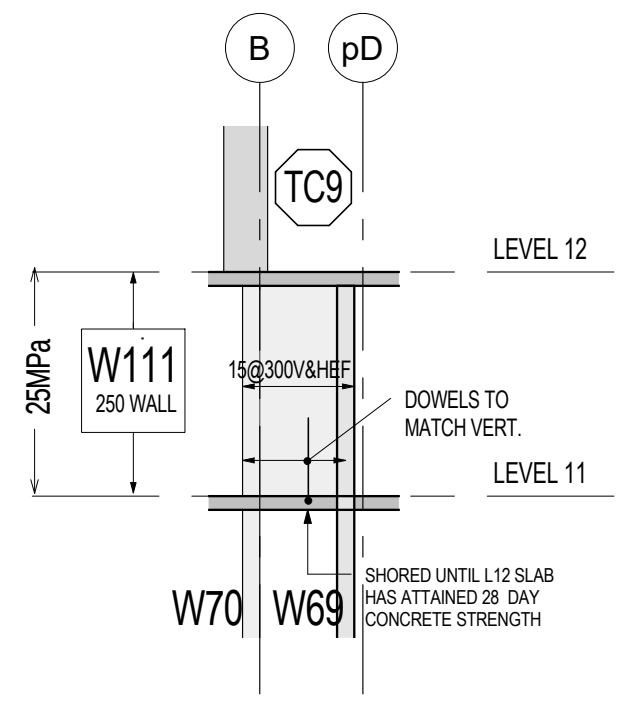
B
pD
TC9
LEVEL 12
W111
250 WALL
25MPa
DOWELS TO MATCH VERT.
LEVEL 11
W70
W69
SHORED UNTIL L12 SLAB HAS ATTAINED 28 DAY CONCRETE STRENGTH

W111 WALL ELEVATION
S3-09 1 : 100

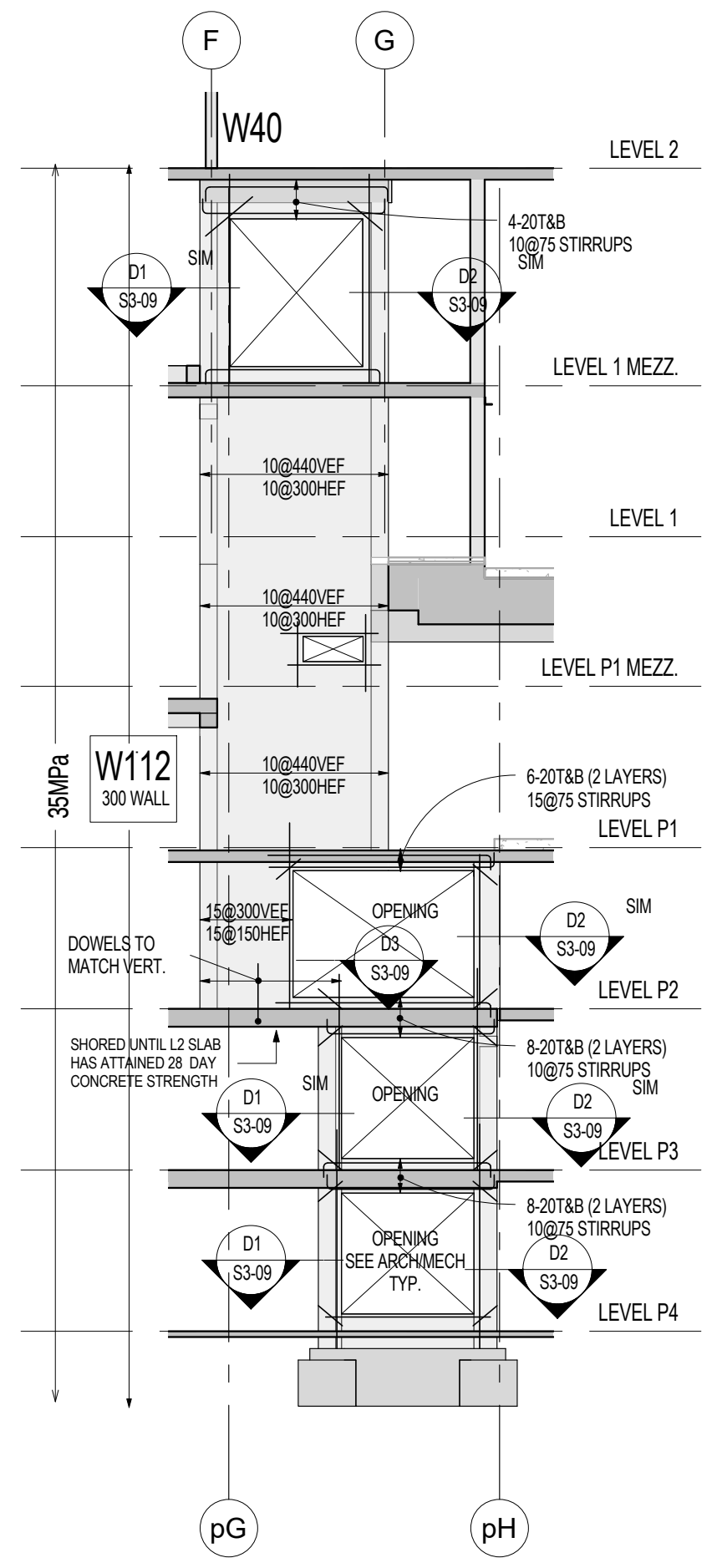
F
G
W40
LEVEL 2
LEVEL 1 MEZZ.
LEVEL 1
LEVEL P1 MEZZ.
LEVEL P1
LEVEL P2
LEVEL P3
LEVEL P4
W112
300 WALL
35MPa
OPENING
DOWELS TO MATCH VERT.
pG
pH

W112 WALL ELEVATION
S3-09 1 : 100

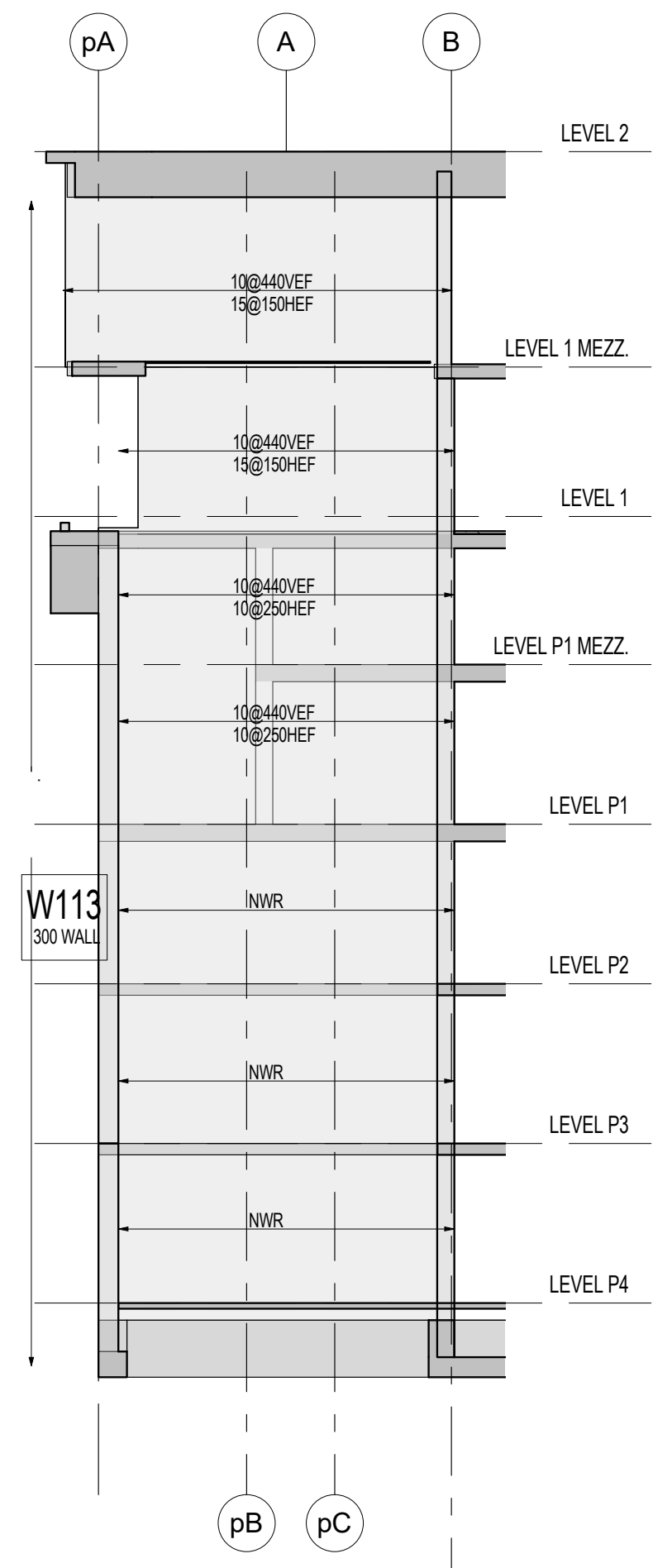
pA
A
B
LEVEL 2
LEVEL 1 MEZZ.
LEVEL 1
LEVEL P1 MEZZ.
LEVEL P1
LEVEL P2
LEVEL P3
LEVEL P4
W113
300 WALL
35MPa
pB
pC

W113 WALL ELEVATION
S3-09 1 : 100

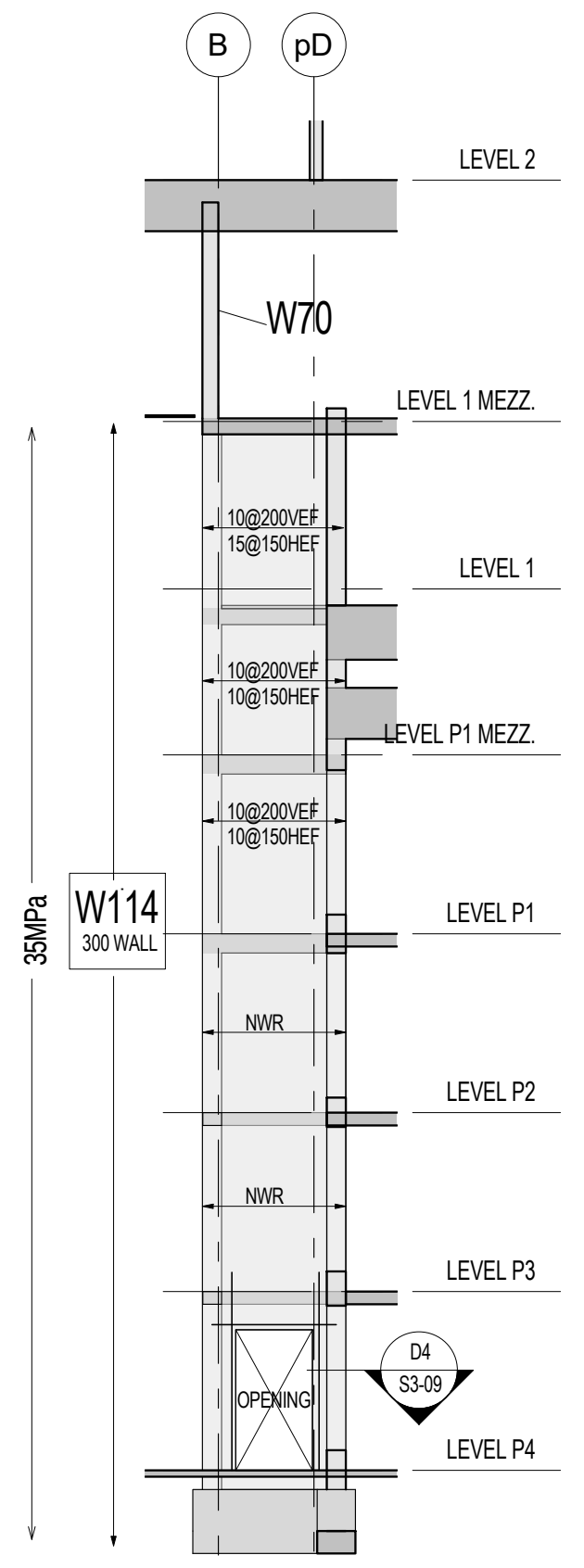
B
pD
W70
LEVEL 2
LEVEL 1 MEZZ.
LEVEL 1
LEVEL P1 MEZZ.
LEVEL P1
LEVEL P2
LEVEL P3
LEVEL P4
W114
300 WALL
35MPa
OPENING

W114 WALL ELEVATION
S3-09 1 : 100

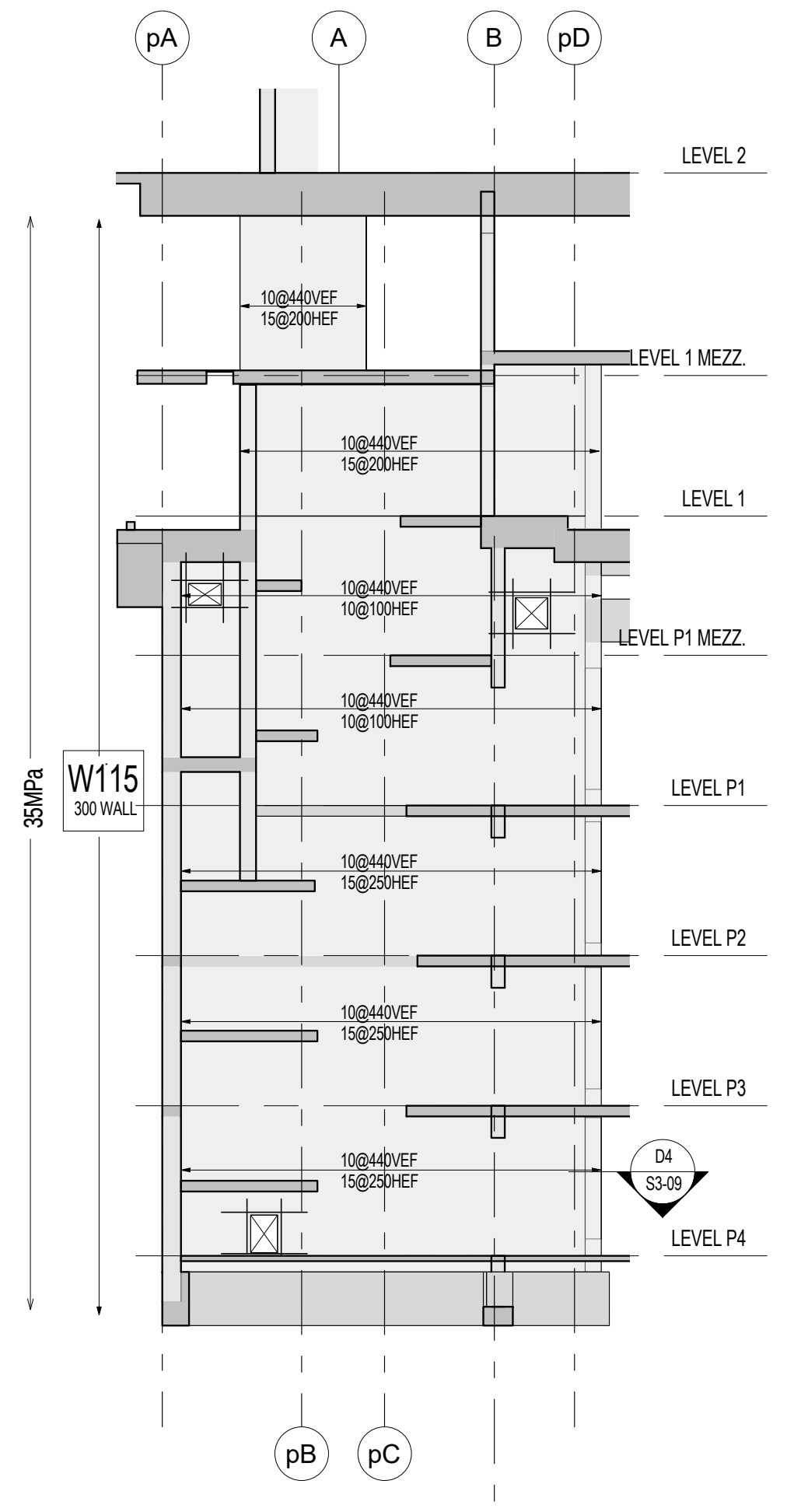
pA
A
B
pD
LEVEL 1 MEZZ.
LEVEL 1
LEVEL P1 MEZZ.
LEVEL P1
LEVEL P2
LEVEL P3
LEVEL P4
W115
300 WALL
35MPa
pB
pC

W115 WALL ELEVATION
S3-09 1 : 100

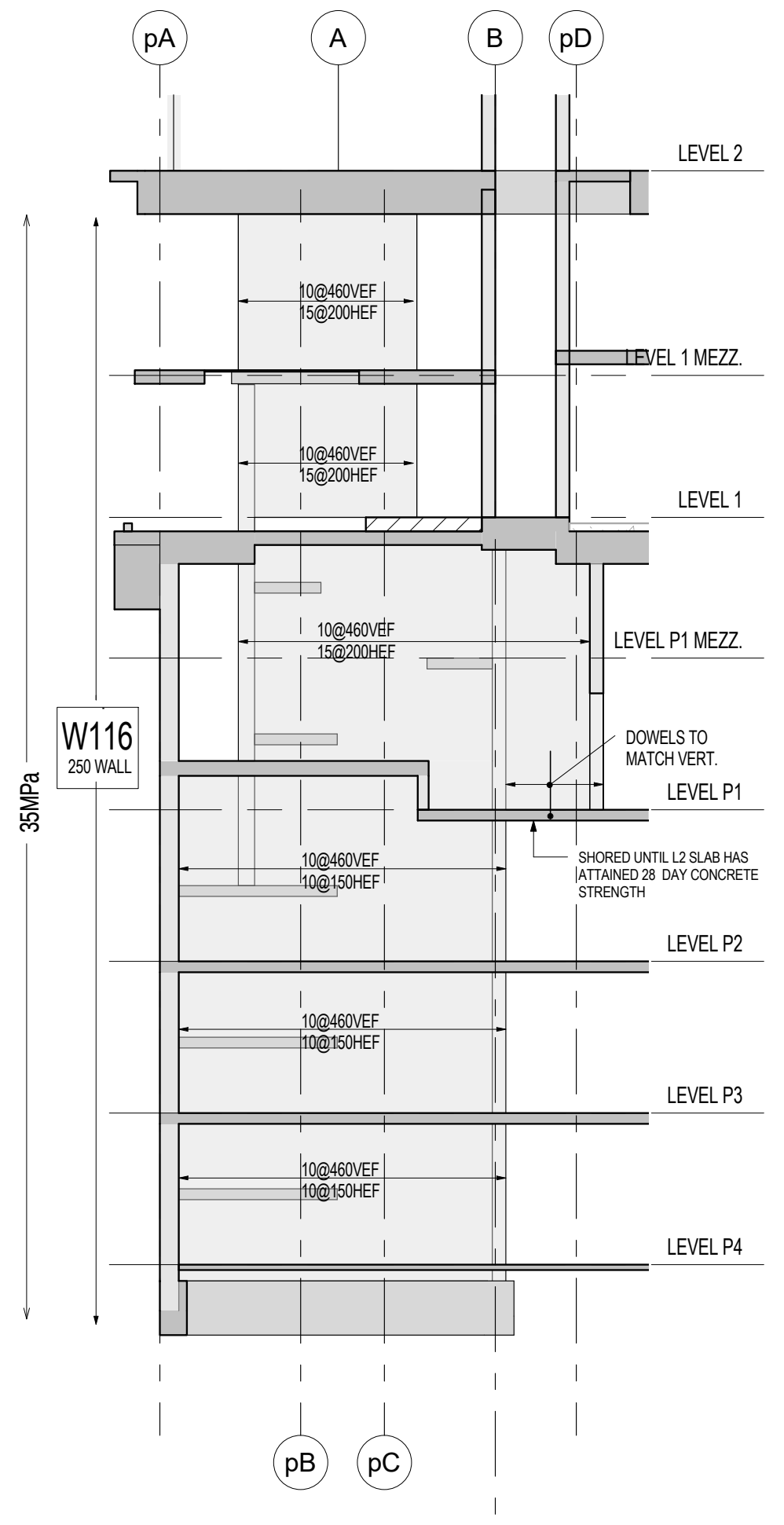
pA
A
B
pD
LEVEL 2
LEVEL 1 MEZZ.
LEVEL 1
LEVEL P1 MEZZ.
LEVEL P1
LEVEL P2
LEVEL P3
LEVEL P4
W116
250 WALL
35MPa
DOWELS TO MATCH VERT.
pB
pC

W116 WALL ELEVATION
S3-09 1 : 100

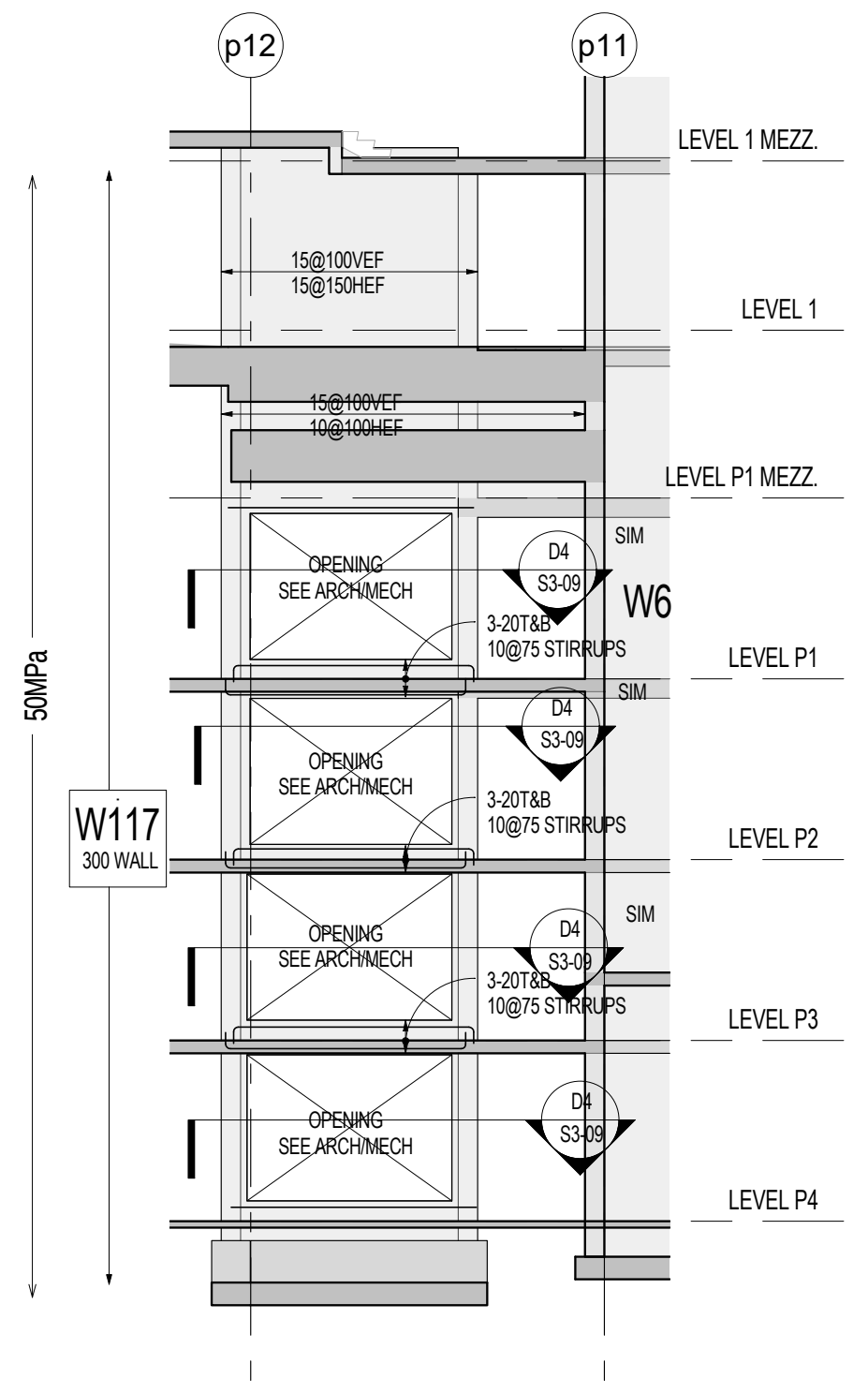
p12
p11
LEVEL 1 MEZZ.
LEVEL 1
LEVEL P1 MEZZ.
LEVEL P1
LEVEL P2
LEVEL P3
LEVEL P4
W117
300 WALL
50MPa
OPENING SEE ARCH/MECH
W6

W117 WALL ELEVATION
S3-09 1 : 100

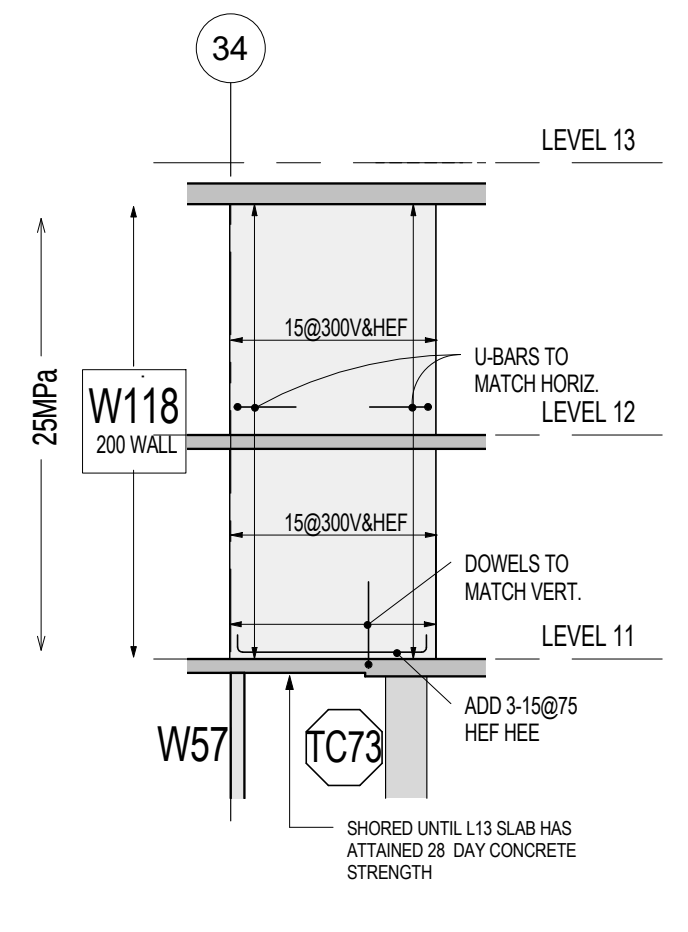
34
LEVEL 13
LEVEL 12
LEVEL 11
W118
200 WALL
25MPa
DOWELS TO MATCH VERT.
W57
TC73

W118 WALL ELEVATION
S3-09 1 : 100

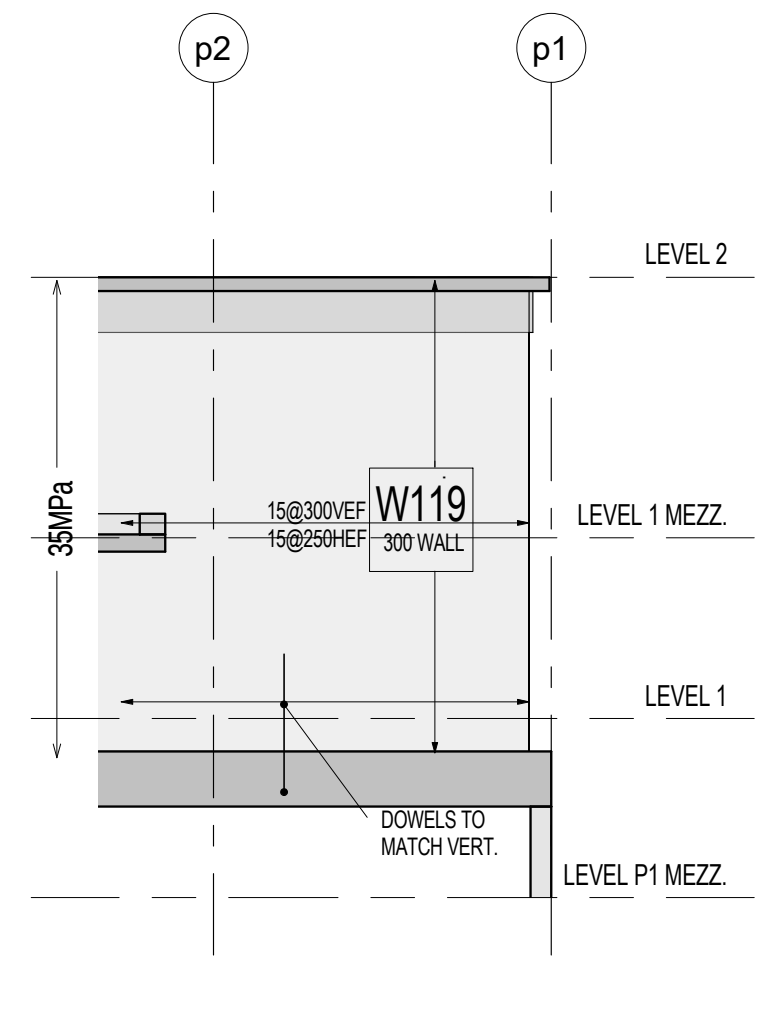
p2
p1
LEVEL 2
LEVEL 1 MEZZ.
LEVEL 1
LEVEL P1 MEZZ.
W119
300 WALL
35MPa
DOWELS TO MATCH VERT.

W119 WALL ELEVATION
S3-09 1 : 100

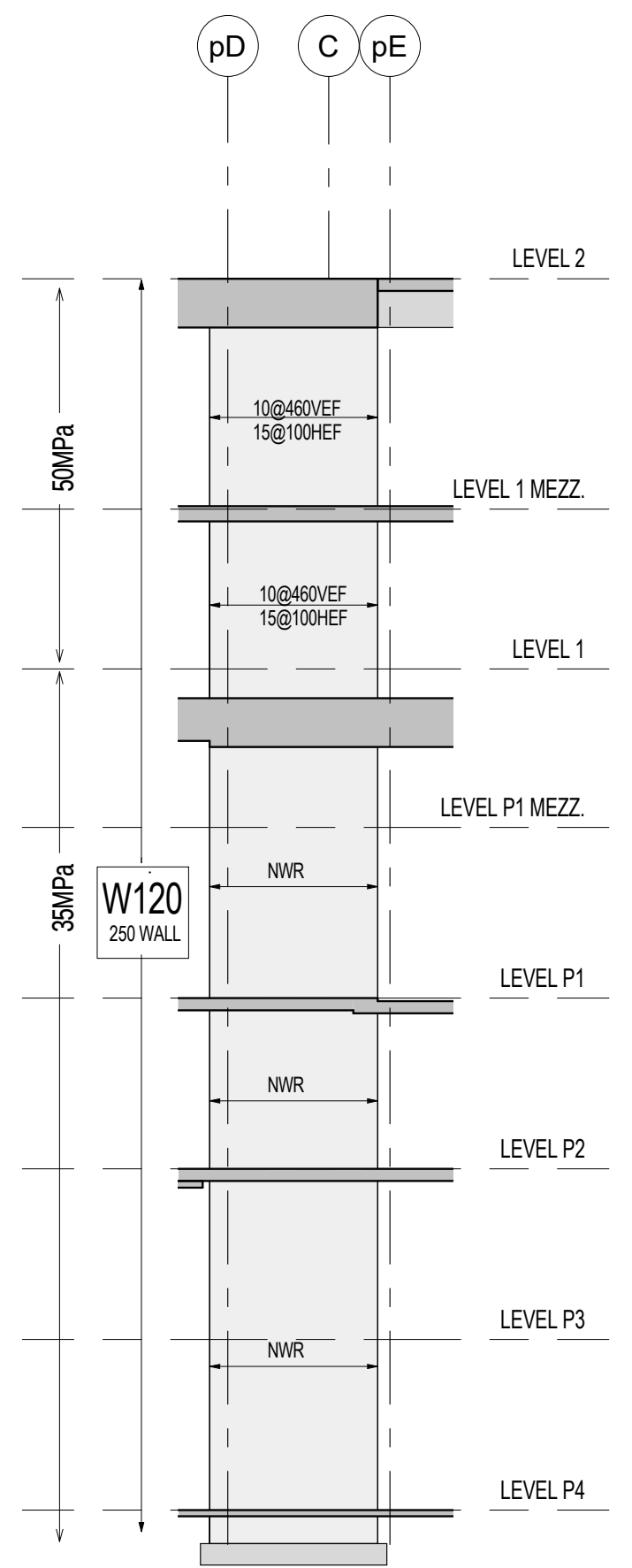
pD
C
pE
LEVEL 2
LEVEL 1 MEZZ.
LEVEL 1
LEVEL P1 MEZZ.
LEVEL P1
LEVEL P2
LEVEL P3
LEVEL P4
W120
250 WALL
50MPa
35MPa

W120 WALL ELEVATION
S3-09 1 : 100

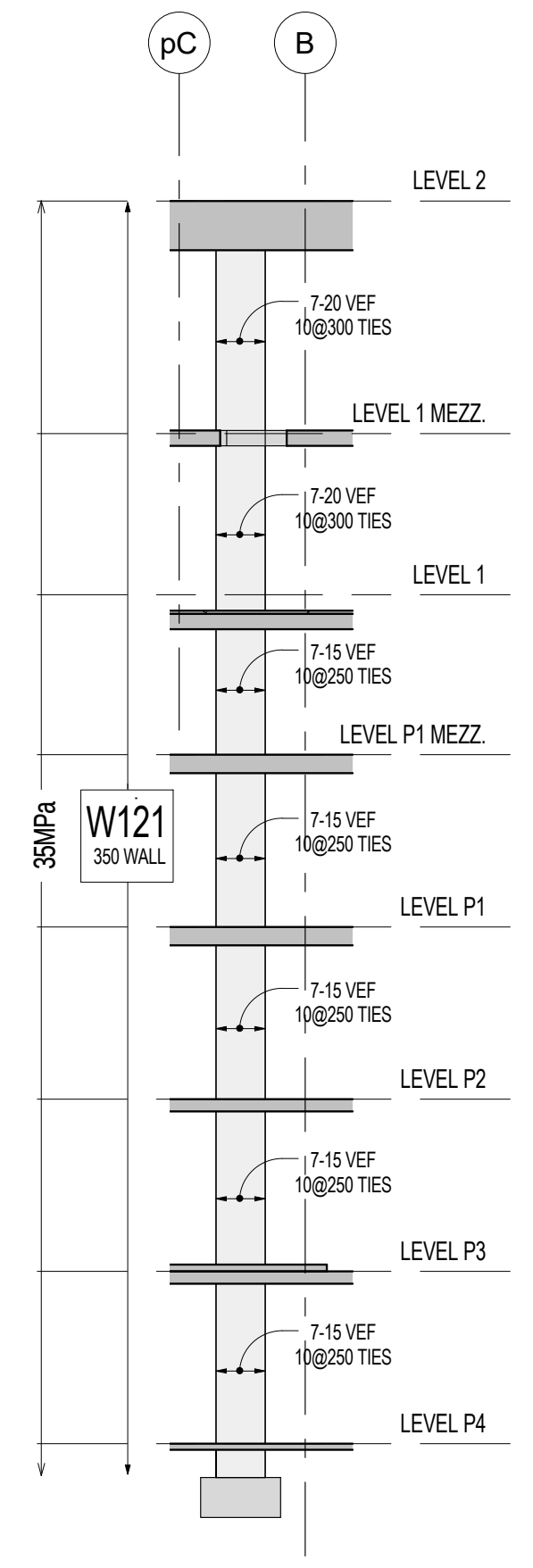
pC
B
LEVEL 2
LEVEL 1 MEZZ.
LEVEL 1
LEVEL P1 MEZZ.
LEVEL P1
LEVEL P2
LEVEL P3
LEVEL P4
W121
300 WALL
35MPa

W121 WALL ELEVATION
S3-09 1 : 100

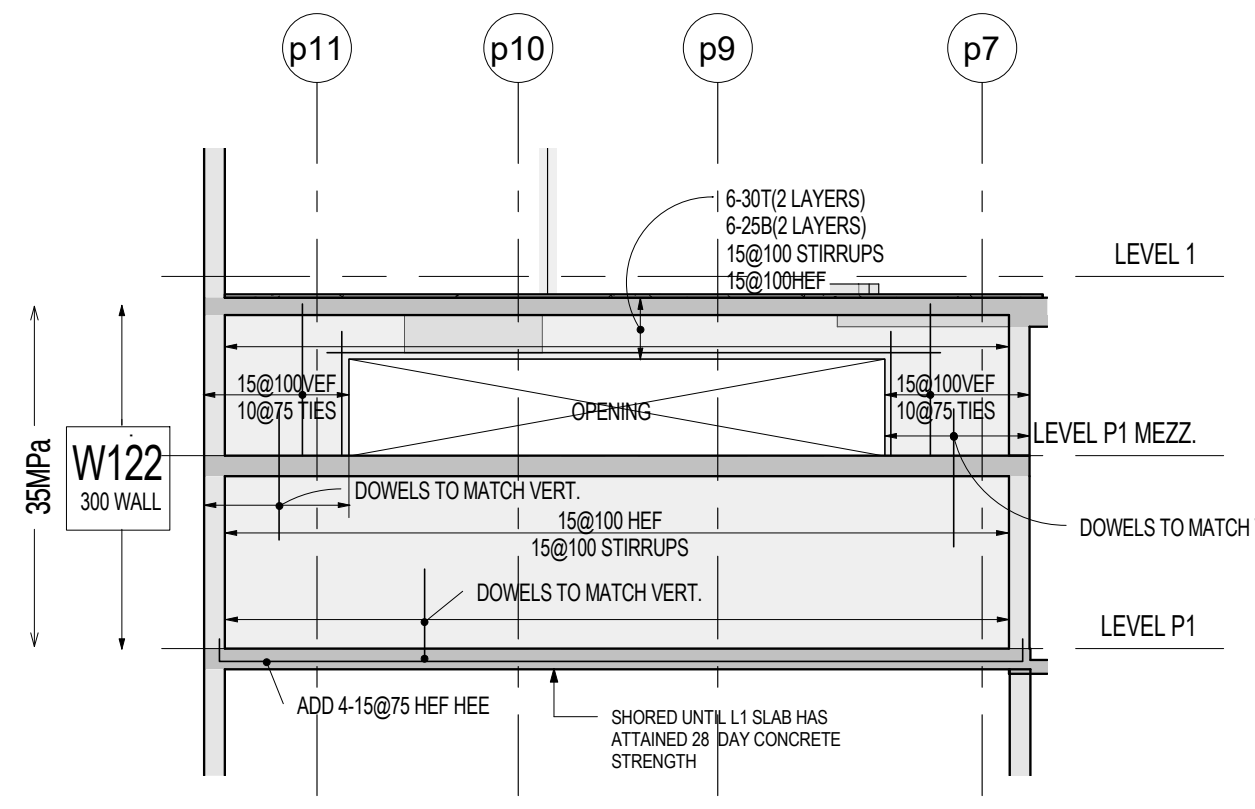
p11
p10
p9
p7
LEVEL 1
LEVEL P1 MEZZ.
LEVEL P1
W122
OPENING
DOWELS TO MATCH VERT.
35MPa

W122 WALL ELEVATION
S3-09 1 : 100

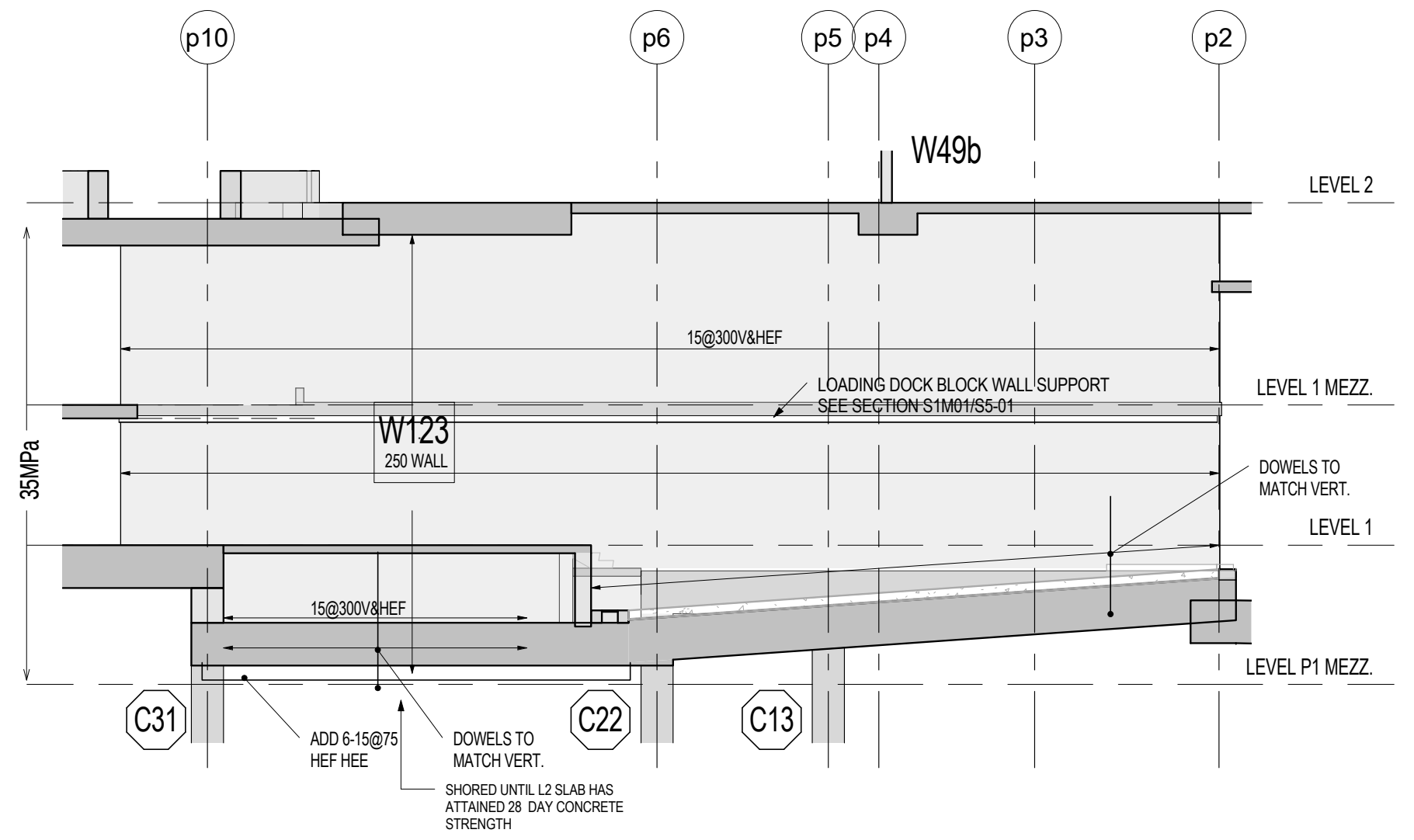
p10
p6
p5
p4
p3
p2
W49b
LEVEL 2
LEVEL 1 MEZZ.
LEVEL 1
LEVEL P1 MEZZ.
W123
250 WALL
LOADING DOCK BLOCK WALL SUPPORT
DOWELS TO MATCH VERT.
C31
C22
C13

W123 WALL ELEVATION
S3-09 1 : 100

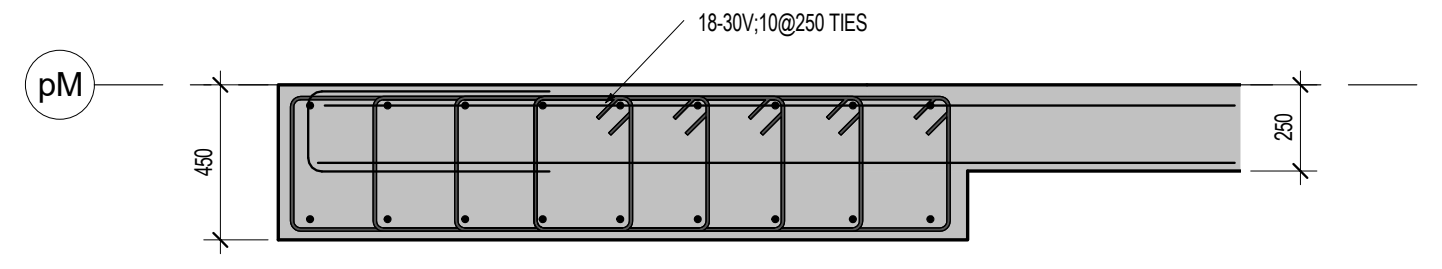
pM
16-30V,10@250 TIES
400
250

D5 DETAIL
S3-09 1 : 20

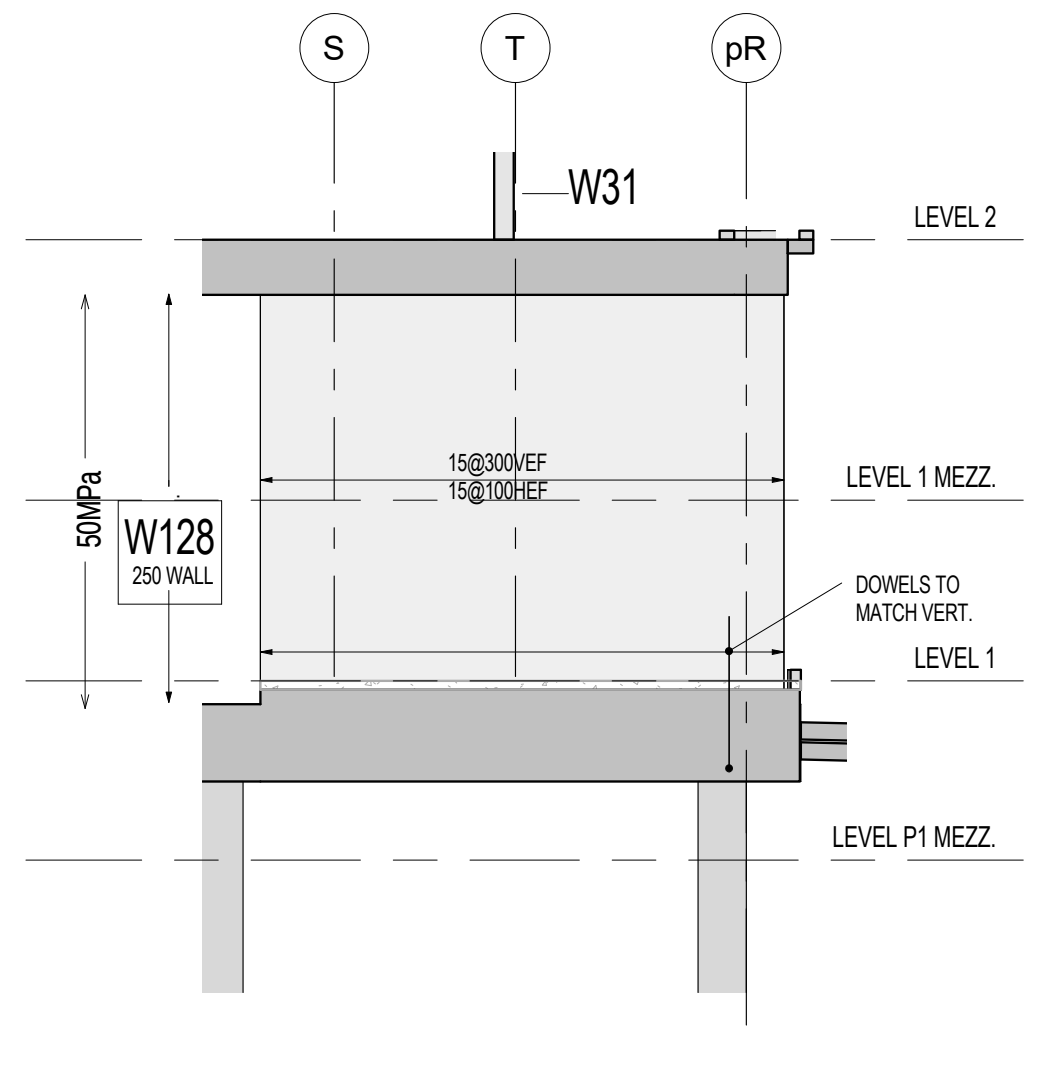
S
T
pR
W31
LEVEL 2
LEVEL 1 MEZZ.
LEVEL 1
LEVEL P1 MEZZ.
W128
250 WALL
50MPa
DOWELS TO MATCH VERT.

W128 WALL ELEVATION
S3-09 1 : 100

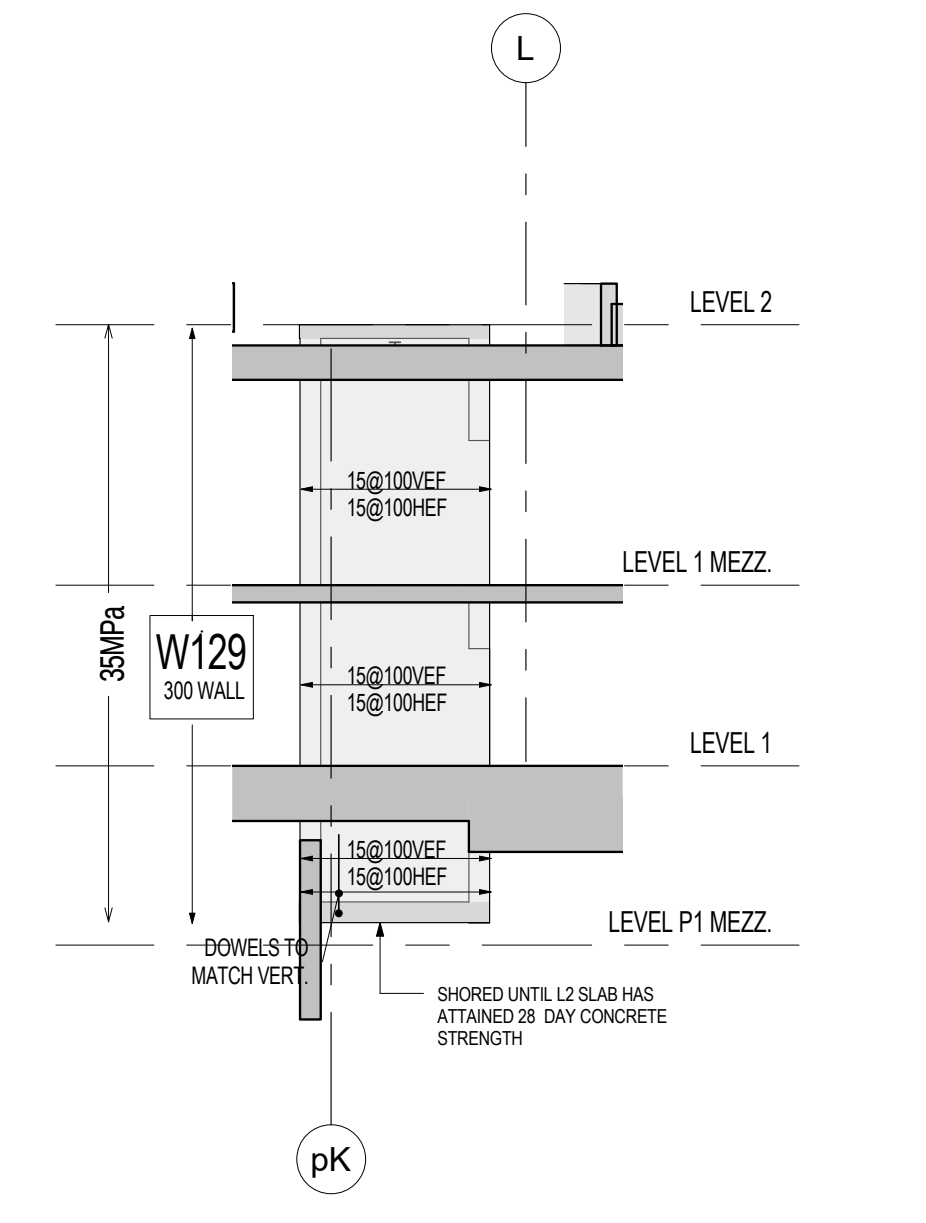
L
LEVEL 2
LEVEL 1 MEZZ.
LEVEL 1
LEVEL P1 MEZZ.
W129
300 WALL
35MPa
DOWELS TO MATCH VERT.
pK

W129 WALL ELEVATION
S3-09 1 : 100

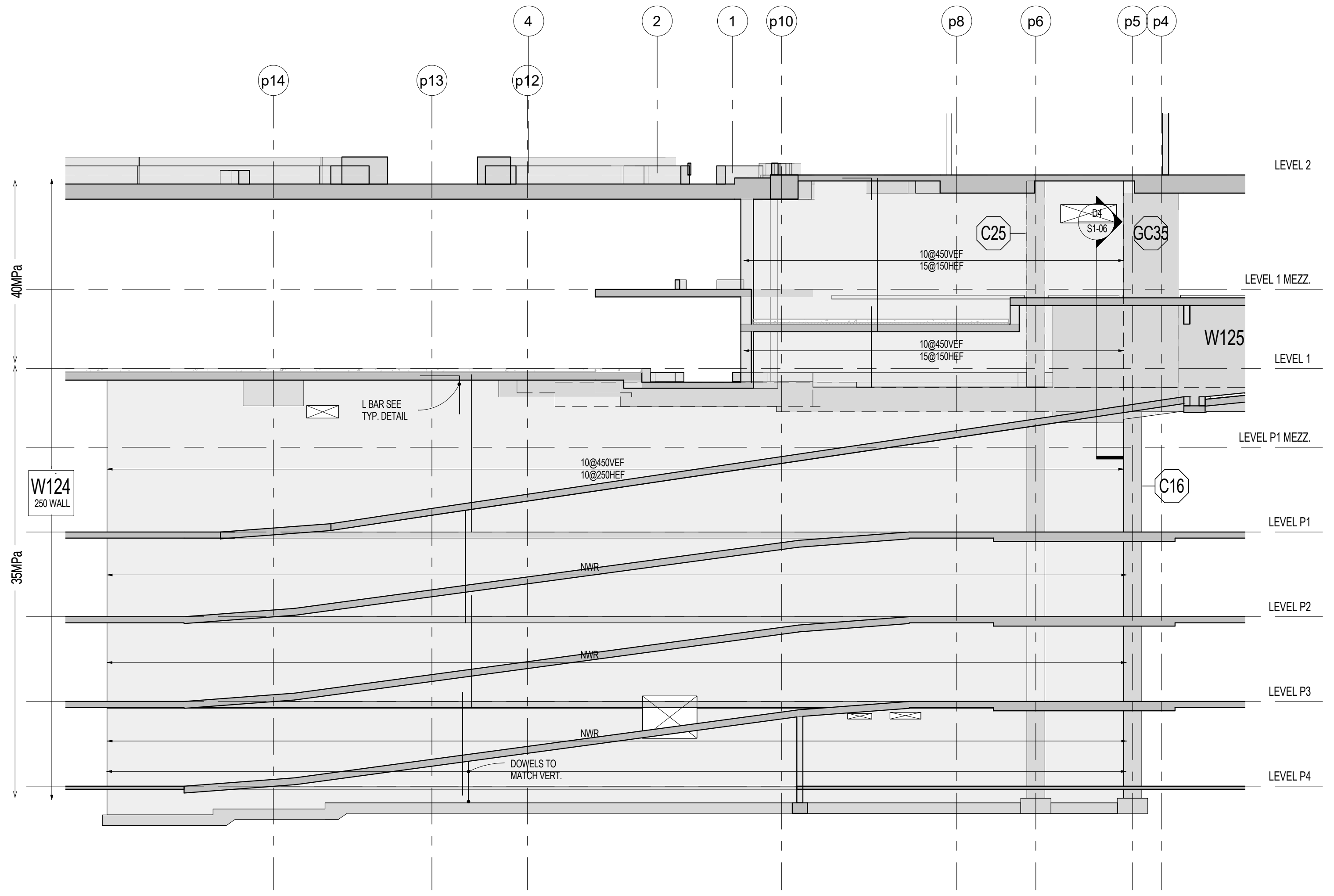
4
2
1
p10
p8
p6
p5
p4
p14
p13
p12
LEVEL 2
LEVEL 1 MEZZ.
LEVEL 1
LEVEL P1 MEZZ.
LEVEL P1
LEVEL P2
LEVEL P3
LEVEL P4
C25
C35
W125
C16
W124
250 WALL
40MPa
35MPa
DOWELS TO MATCH VERT.

W124 WALL ELEVATION
S3-09 1 : 100

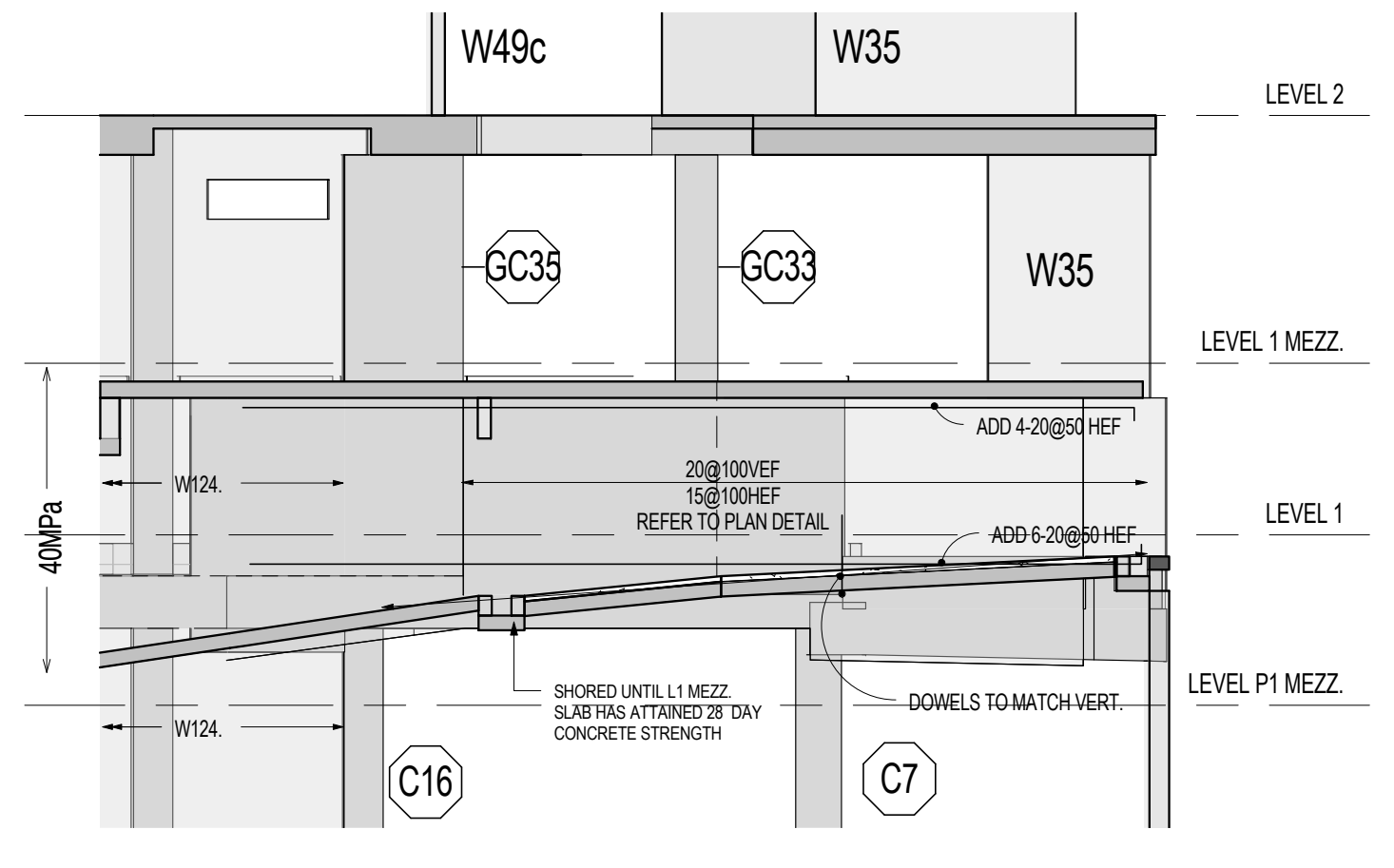
W49c
W35
GC35
GC33
W35
LEVEL 2
LEVEL 1 MEZZ.
LEVEL 1
LEVEL P1 MEZZ.
40MPa
REFER TO PLAN DETAIL
DOWELS TO MATCH VERT.
C16
C7

W125 WALL ELEVATION
S3-09 1 : 100

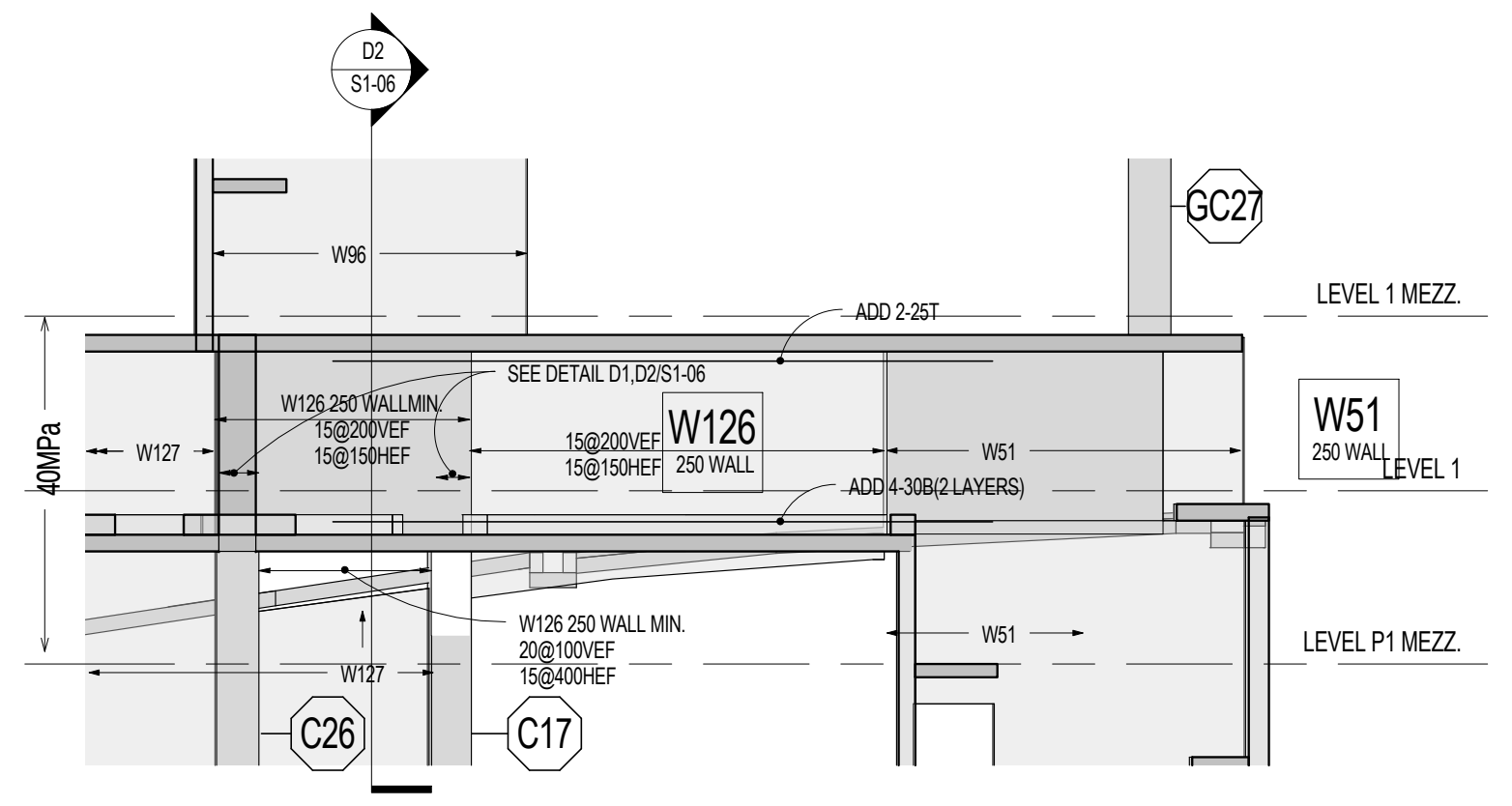
GC27
LEVEL 1 MEZZ.
W126
250 WALL
W51
250 WALL
LEVEL P1 MEZZ.
40MPa
C26
C17

W126 WALL ELEVATION
S3-09 1 : 100

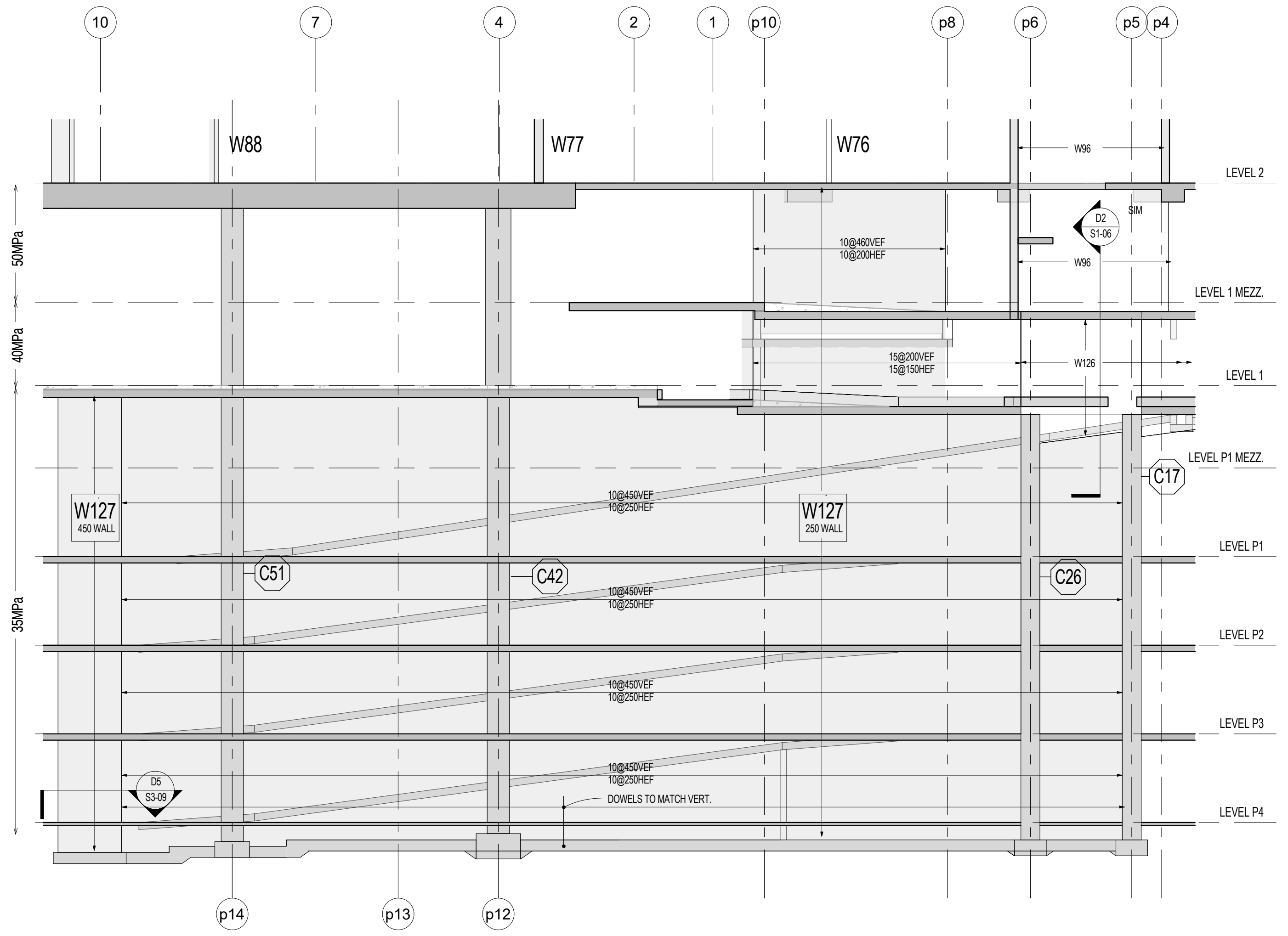
10
7
4
2
1
p10
p8
p6
p5
p4
W88
W77
W76
LEVEL 2
LEVEL 1 MEZZ.
LEVEL 1
LEVEL P1 MEZZ.
LEVEL P1
LEVEL P2
LEVEL P3
LEVEL P4
W127
400 WALL
W127
250 WALL
C51
C42
C26
C17
50MPa
40MPa
35MPa
DOWELS TO MATCH VERT.
p14
p13
p12

W127 WALL ELEVATION
S3-09 1 : 100

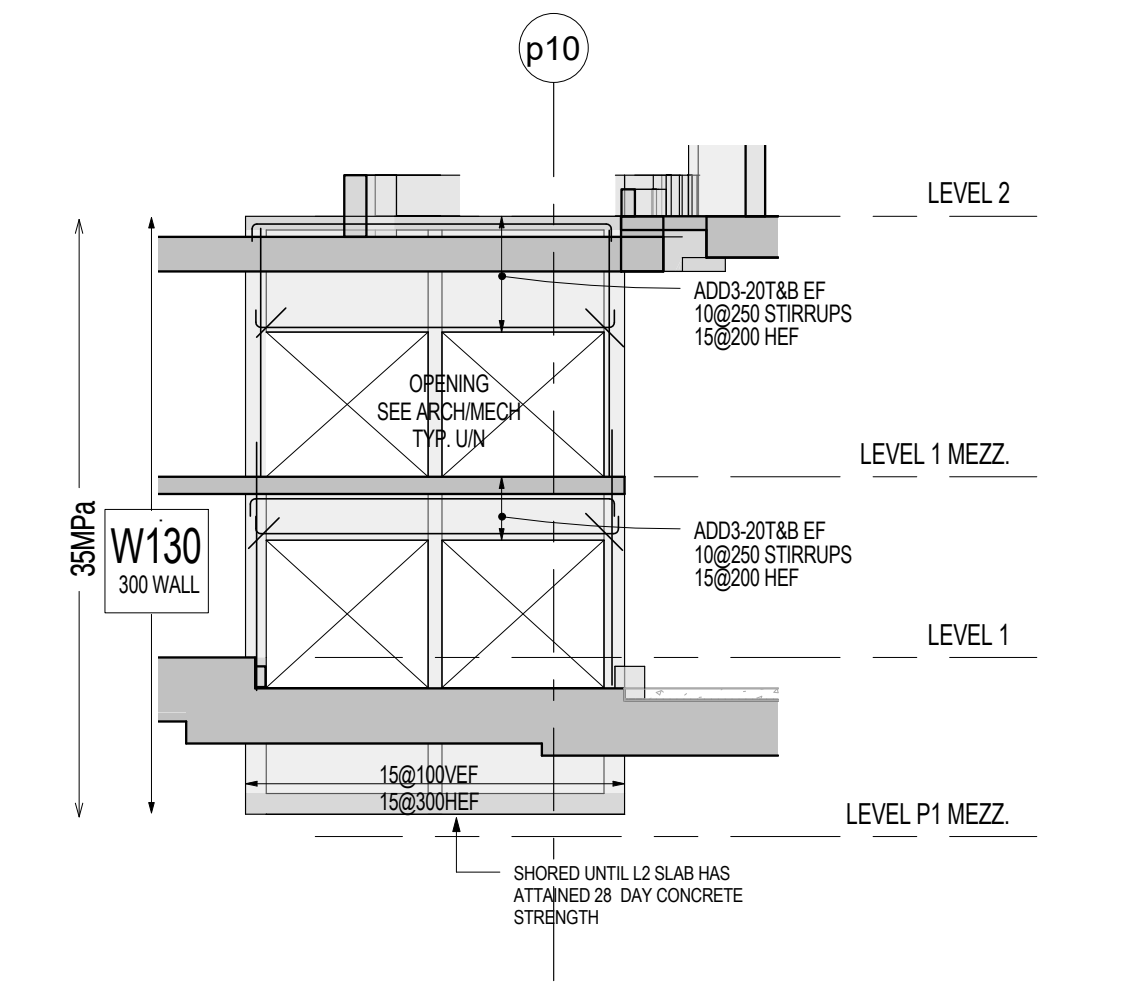
p10
LEVEL 2
LEVEL 1 MEZZ.
LEVEL 1
LEVEL P1 MEZZ.
W130
300 WALL
35MPa
OPENING SEE ARCH/MECH

W130 WALL ELEVATION
S3-09 1 : 100

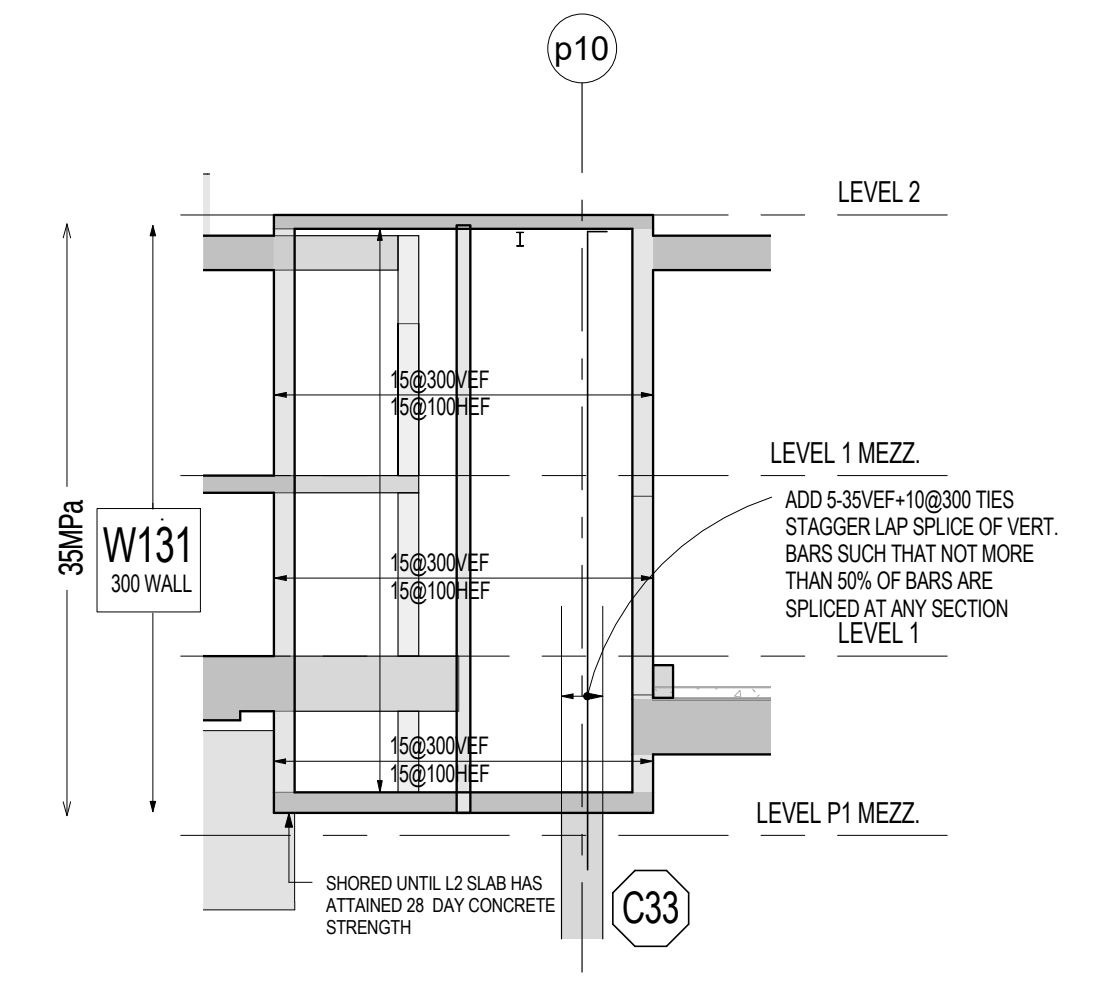
p10
LEVEL 2
LEVEL 1 MEZZ.
LEVEL 1
LEVEL P1 MEZZ.
W131
300 WALL
35MPa
C33

W131 WALL ELEVATION
S3-09 1 : 100

REFER TO NOTES ON SHEET S3-01

Plot Date: 3/9/2016 10:02:36 AM

Contractor Must Check And Verify All Dimensions On The Job.

Do Not Scale The Drawings.

All Drawings, Specifications And Related Documents Are The Copyright Of The Architect And Must Be Returned Upon Request.

Reproduction Of Drawings, Specifications And Related Documents In Part Or Whole Is Forbidden Without The Architects Written Permission.

This Drawing Is Not To Be Used For Construction Until Signed ByThe Architect.

Date:

DEC.18,2015 DEC.18,2015

stephenson
ENGINEERING
2550 Victoria Park Ave. Suite 602
Toronto ON M2J 5A9 | Tel: (416) 635 9970
www.stephenson-eng.com | info@stephenson-eng.com

No	Revision	Date

No	Issued For	Date
7	ISSUED FOR STEEL TENDER	DEC.18,2015
4	BUILDING PERMIT RESUBMISSION	SEPT.21,2015
3	BUILDING PERMIT RESUBMISSION	JULY 22,2015
2	BUILDING PERMIT SUBMISSION	JUNE 12,2015
1	ISSUED FOR WT REVIEW	MAY 01,2015

AQUAVISTA
AT BAYSIDE TORONTO

Drawing Title
WALL ELEVATIONS

Project
Hines TRIDEL®
AQUAVISTA
Block 3 - R3 & R4
Merchant's Whart
Toronto, ON

Scale
As indicated
Drawn by
DC
Checked by
BK/BBS
Project No.
20140031
Date
DEC.18,2015
Drawing No.
S3-09

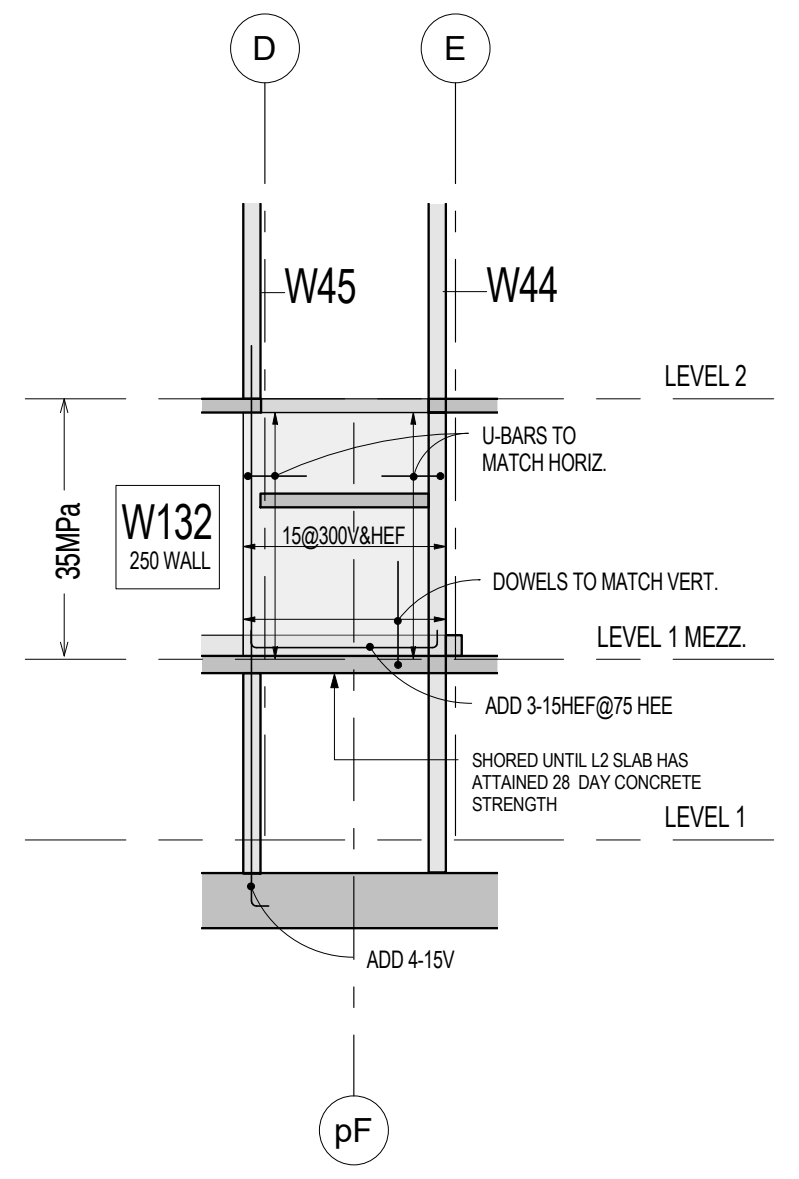
W45
W44
W132
250 WALL
LEVEL 2
LEVEL 1 MEZZ.
LEVEL 1
35MPa

W132 WALL ELEVATION
S3-10 1 : 100

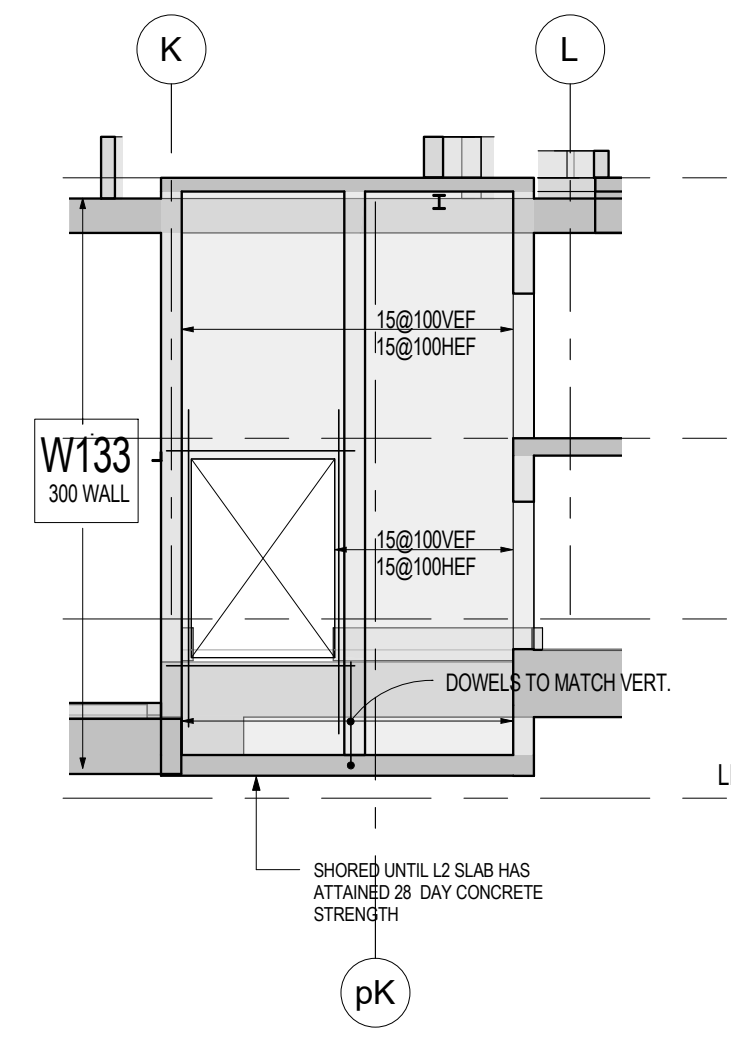
W133
300 WALL
LEVEL 2
LEVEL 1 MEZZ.
LEVEL 1
LEVEL P1 MEZZ.
DOWELS TO MATCH VERT.
35MPa

W133 WALL ELEVATION
S3-10 1 : 100

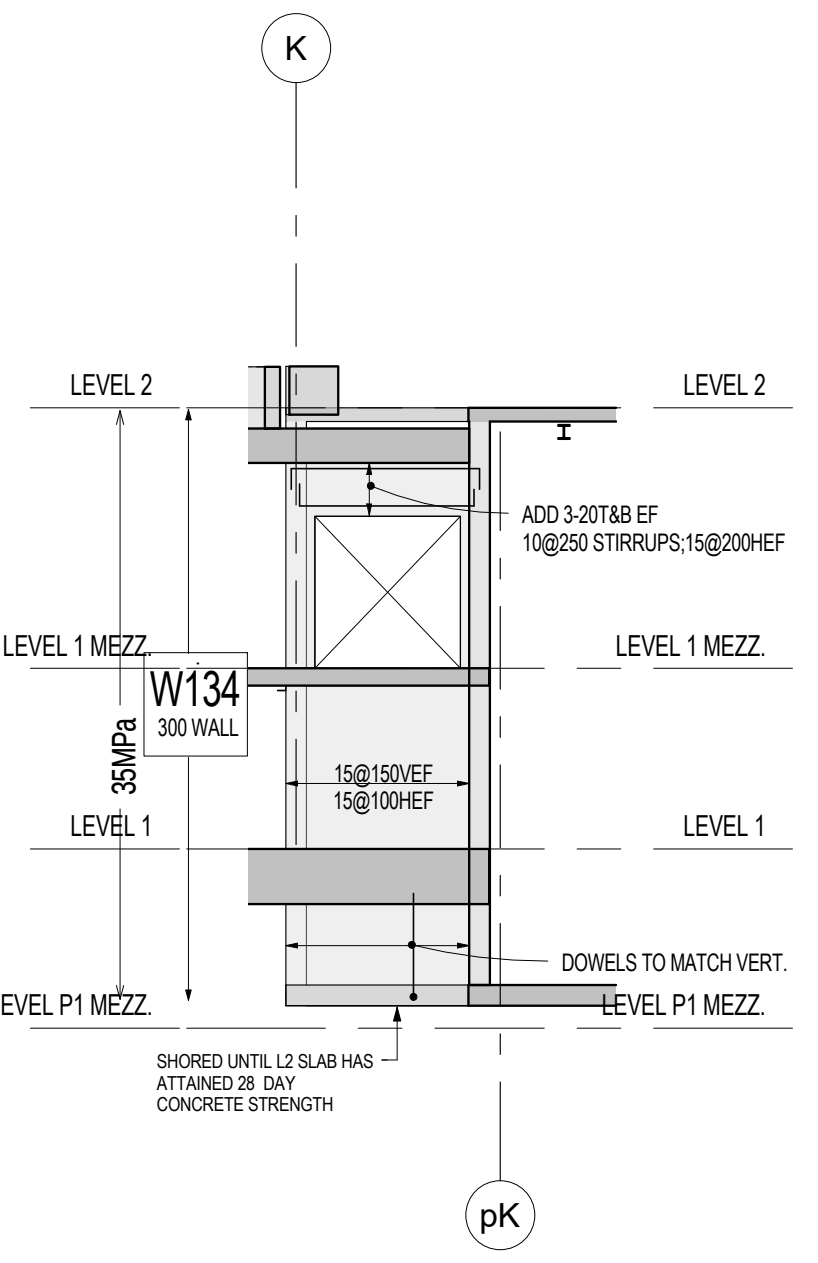
W134
300 WALL
LEVEL 2
LEVEL 1 MEZZ.
LEVEL 1
LEVEL P1 MEZZ.
DOWELS TO MATCH VERT.
35MPa

W134 WALL ELEVATION
S3-10 1 : 100

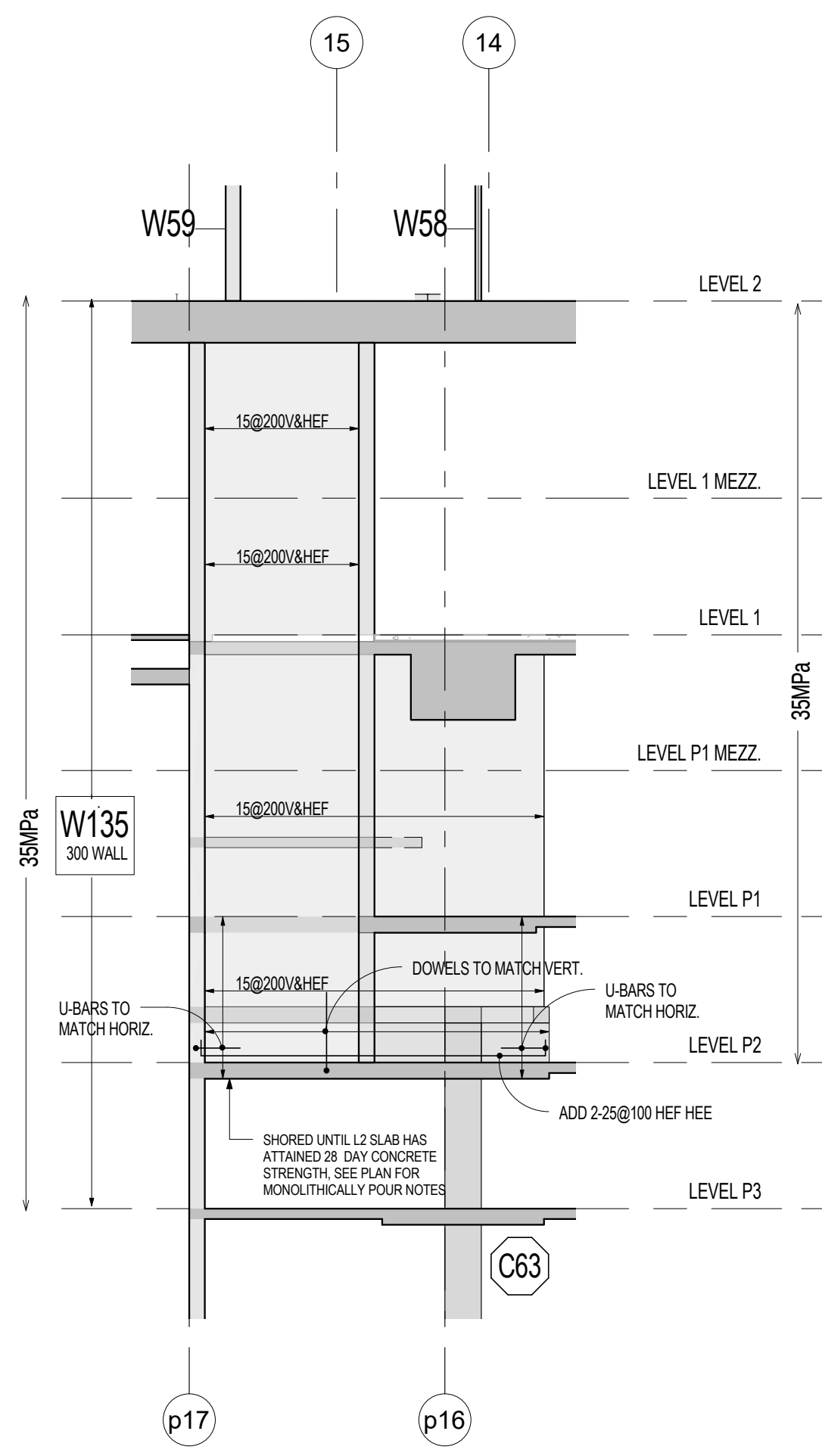
W59
W58
W135
300 WALL
LEVEL 2
LEVEL 1 MEZZ.
LEVEL 1
LEVEL P1 MEZZ.
LEVEL P1
LEVEL P2
LEVEL P3
DOWELS TO MATCH VERT.
U-BARS TO MATCH HORIZ.
C63
35MPa

W135 WALL ELEVATION
S3-10 1 : 100

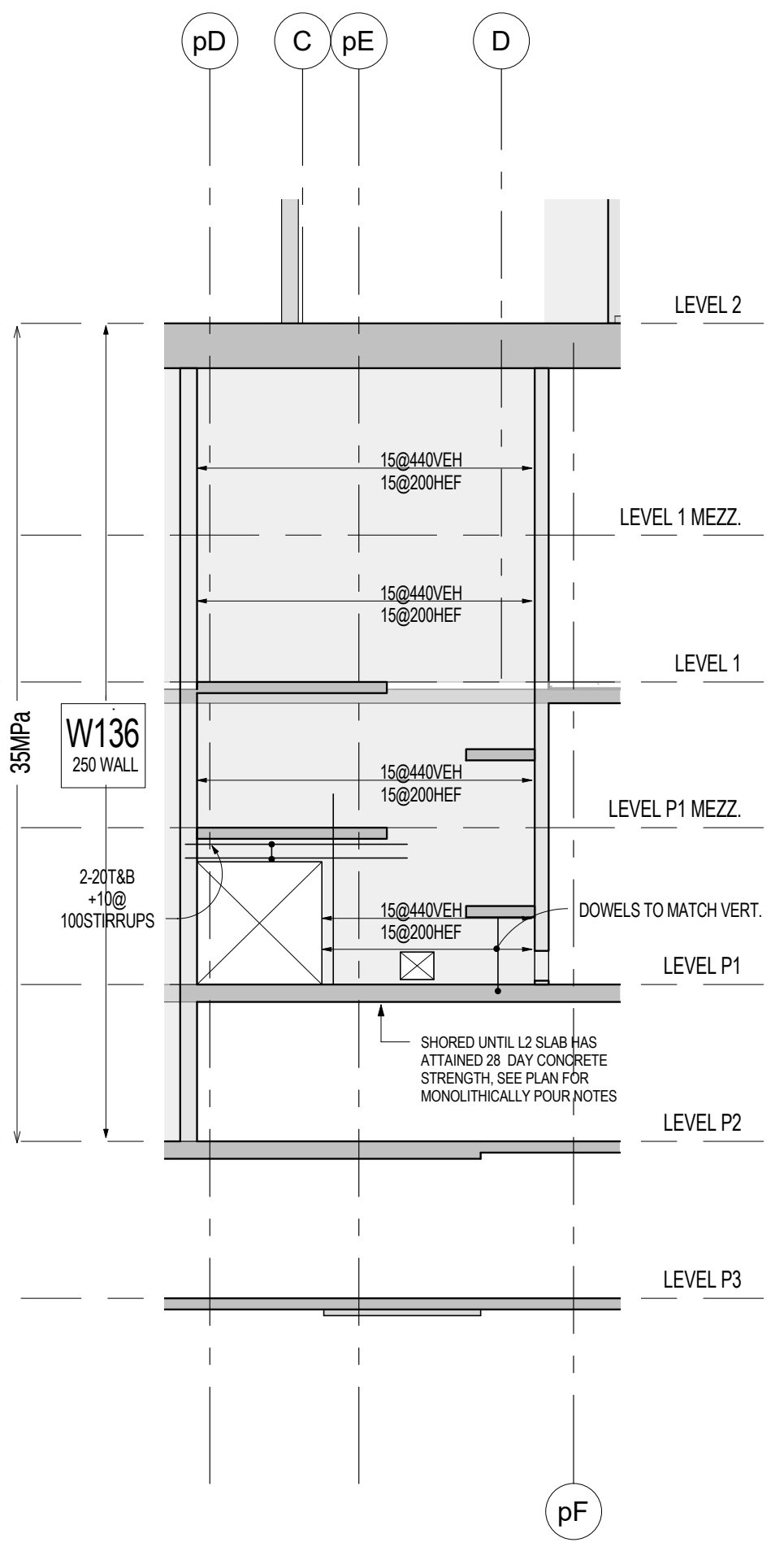
W136
250 WALL
LEVEL 2
LEVEL 1 MEZZ.
LEVEL 1
LEVEL P1 MEZZ.
LEVEL P1
LEVEL P2
LEVEL P3
DOWELS TO MATCH VERT.
35MPa

W136 WALL ELEVATION
S3-10 1 : 100

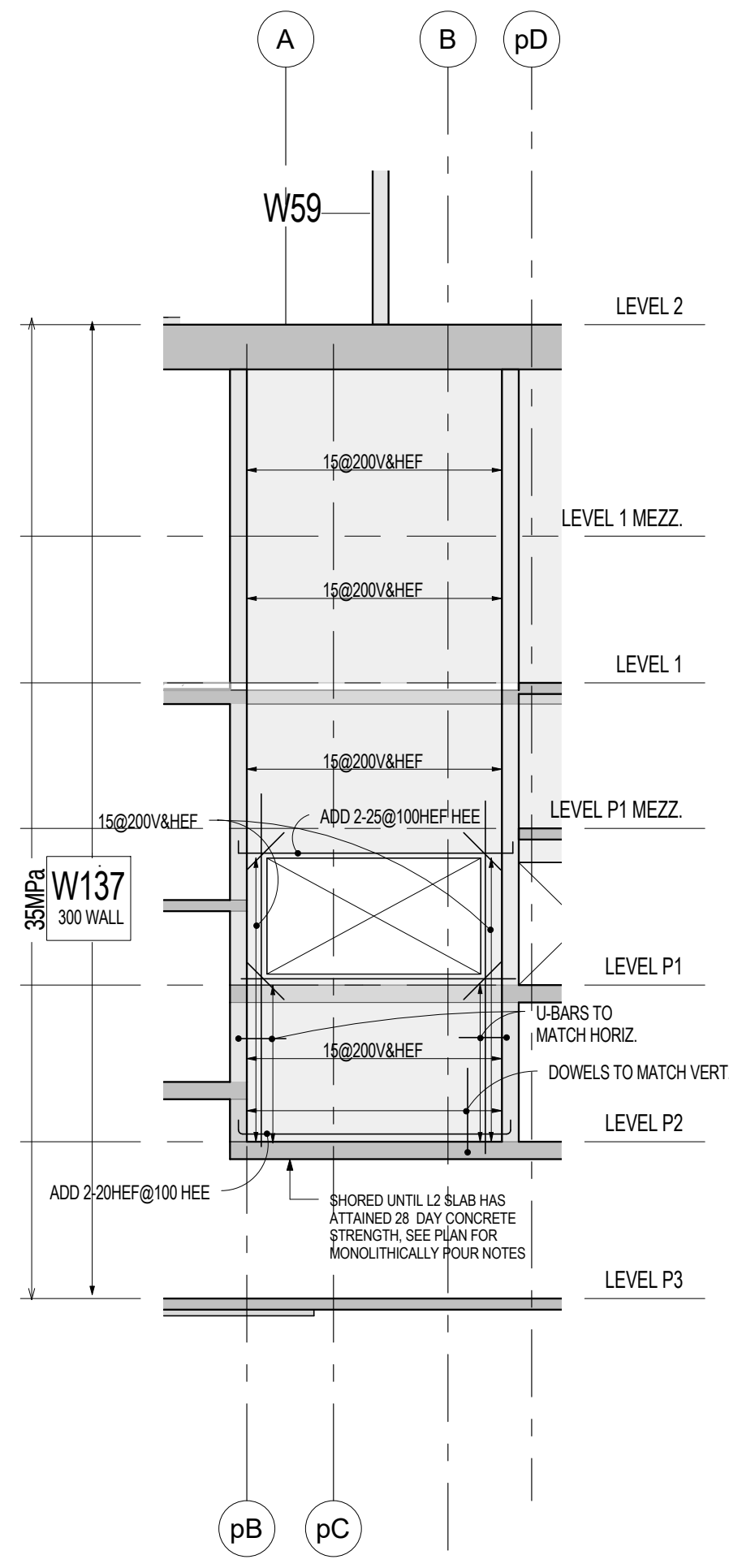
W59
W137
300 WALL
LEVEL 2
LEVEL 1 MEZZ.
LEVEL 1
LEVEL P1 MEZZ.
LEVEL P1
LEVEL P2
LEVEL P3
DOWELS TO MATCH VERT.
35MPa

W137 WALL ELEVATION
S3-10 1 : 100

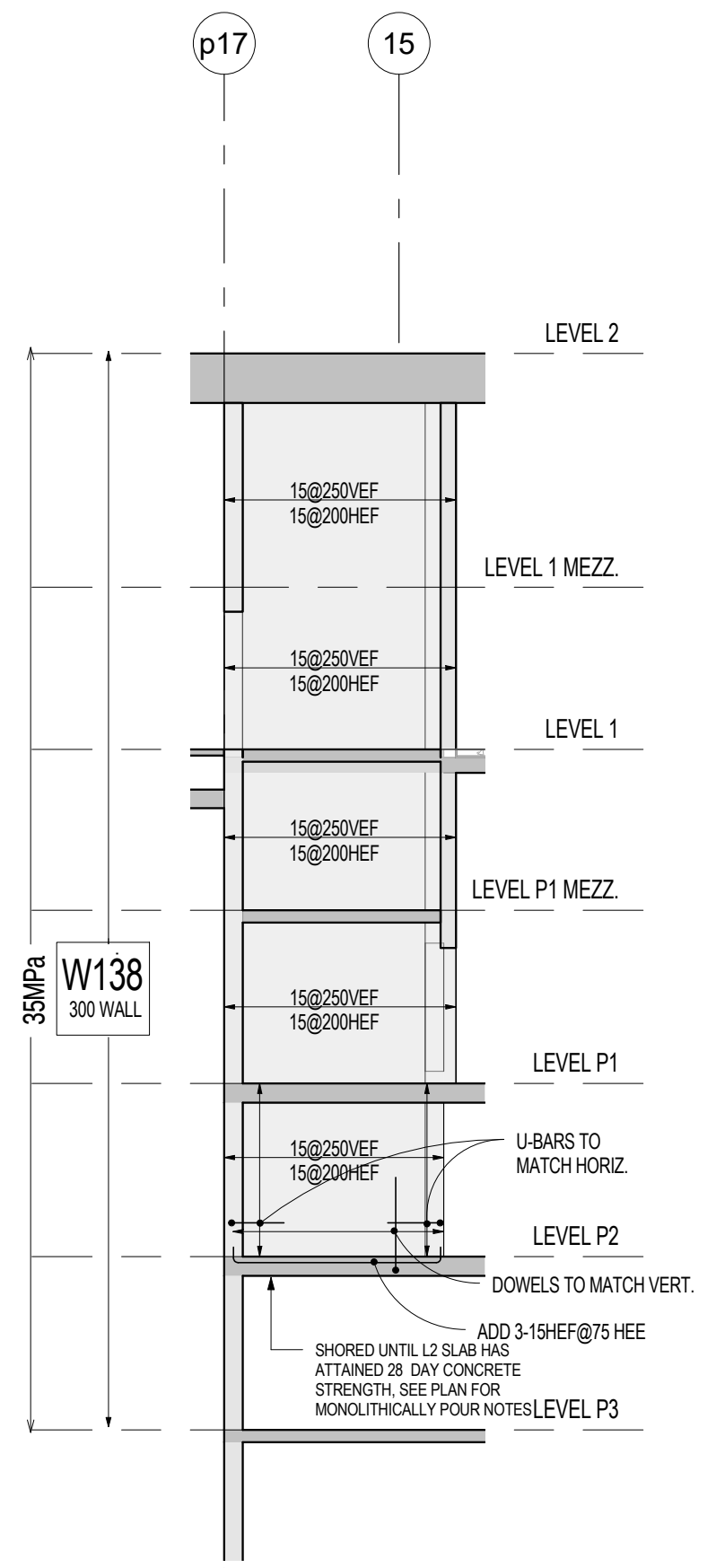
W138
300 WALL
LEVEL 2
LEVEL 1 MEZZ.
LEVEL 1
LEVEL P1 MEZZ.
LEVEL P1
LEVEL P2
LEVEL P3
35MPa

W138 WALL ELEVATION
S3-10 1 : 100

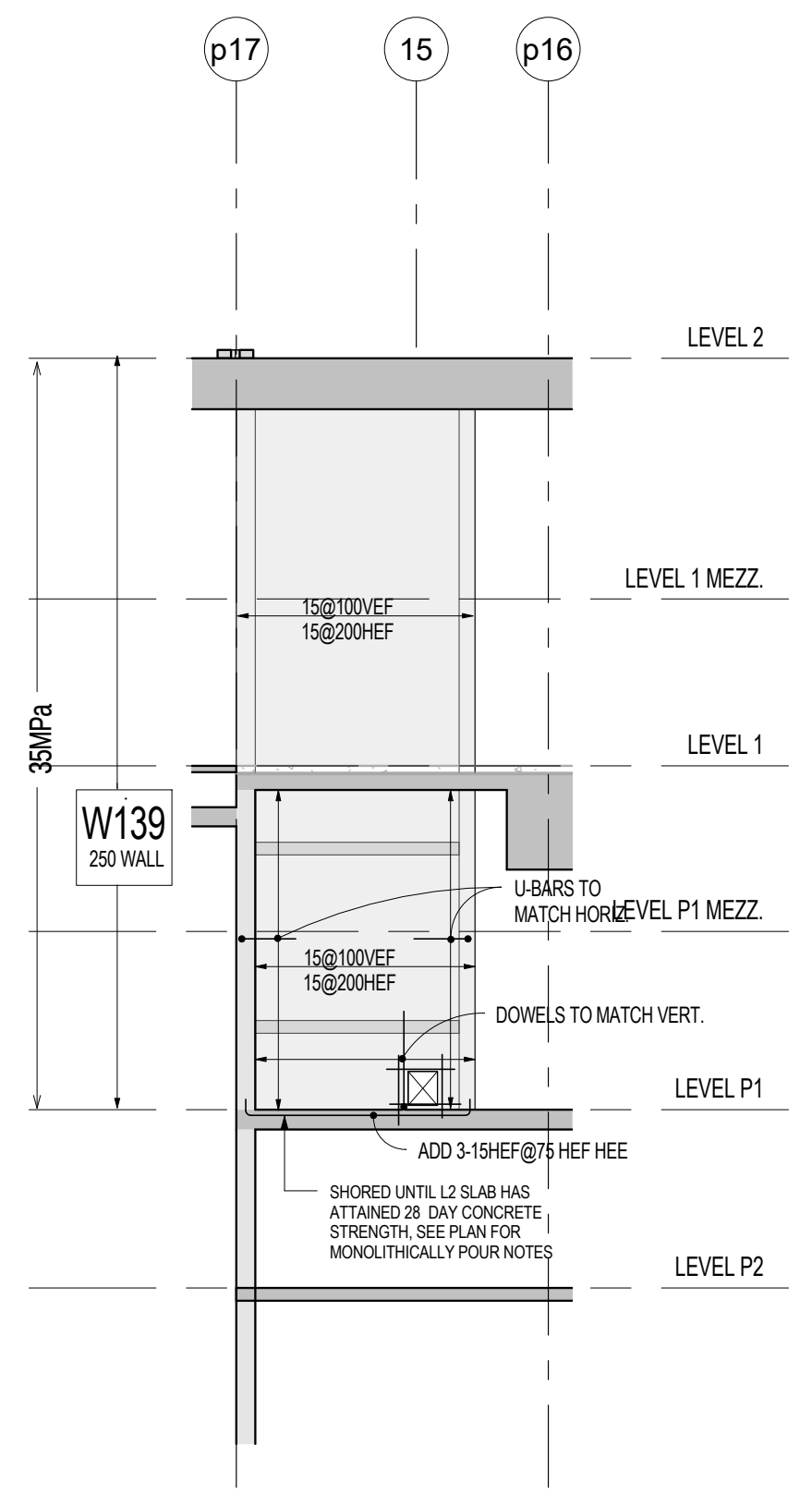
W139
250 WALL
LEVEL 2
LEVEL 1 MEZZ.
LEVEL 1
LEVEL P1 MEZZ.
LEVEL P1
LEVEL P2
DOWELS TO MATCH VERT.

W139 WALL ELEVATION
S3-10 1 : 100

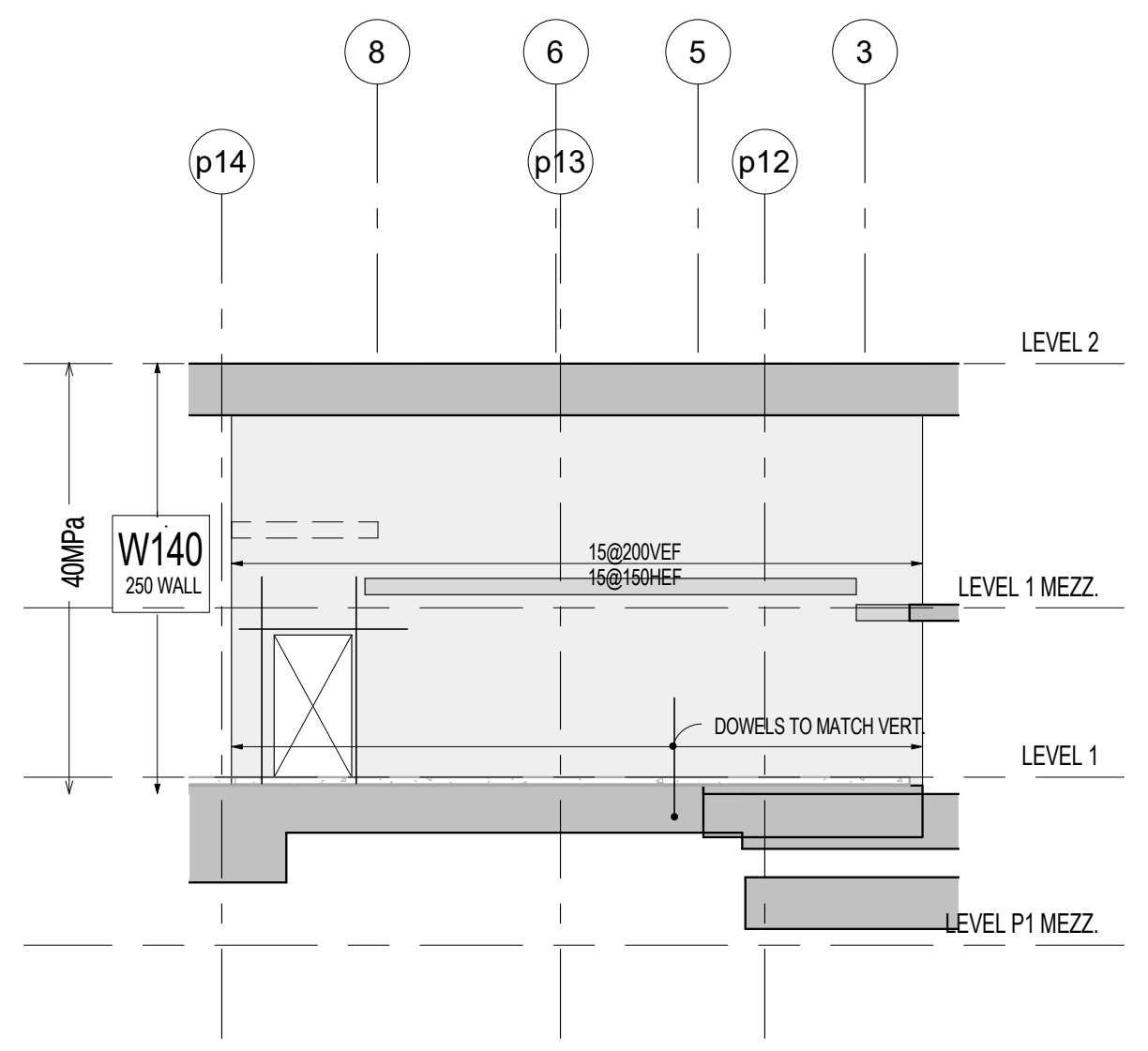
W140
250 WALL
LEVEL 2
LEVEL 1 MEZZ.
LEVEL 1
LEVEL P1 MEZZ.
DOWELS TO MATCH VERT.
40MPa

W140 WALL ELEVATION
S3-10 1 : 100

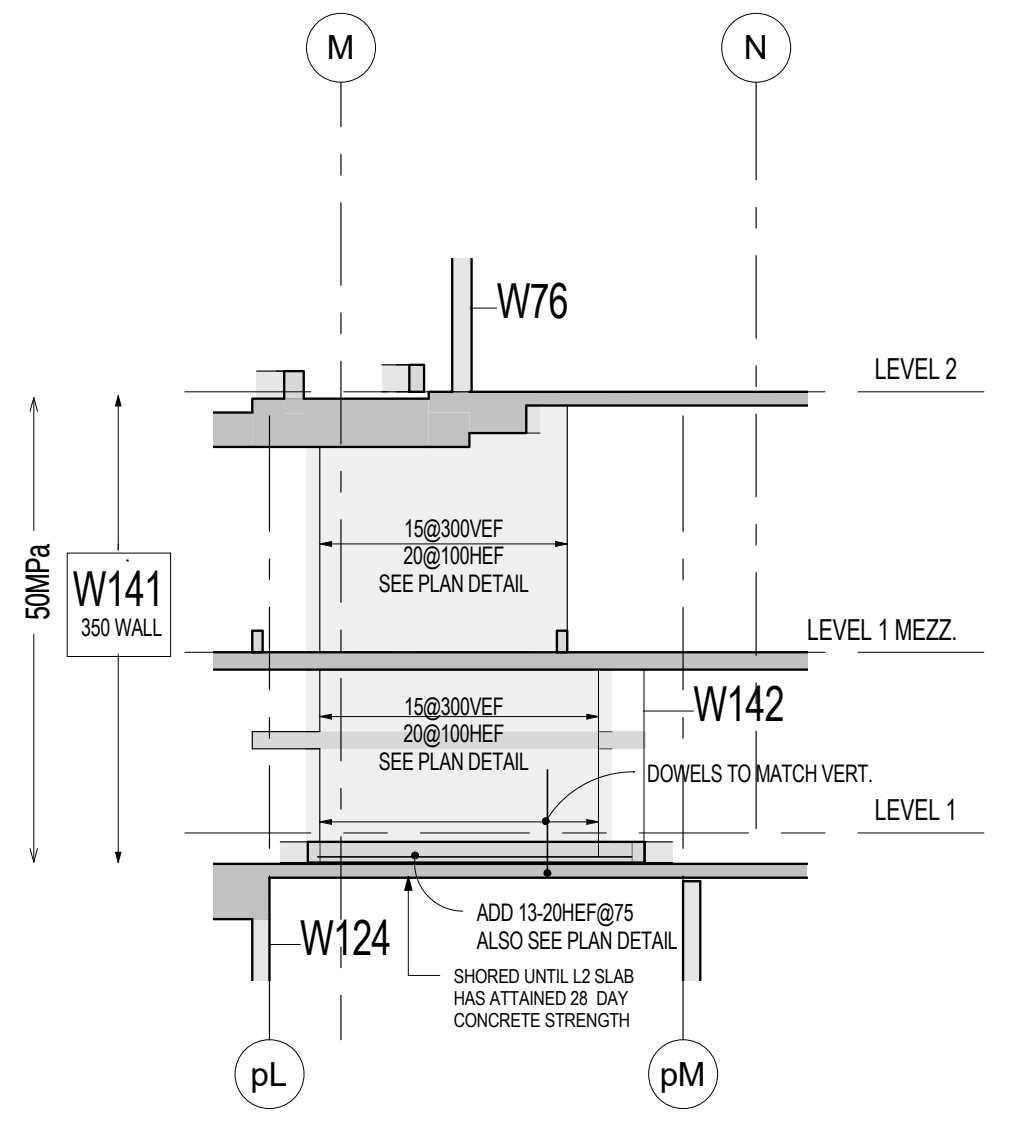
W76
W141
300 WALL
W142
W124
LEVEL 2
LEVEL 1 MEZZ.
LEVEL 1
50MPa

W141 WALL ELEVATION
S3-10 1 : 100

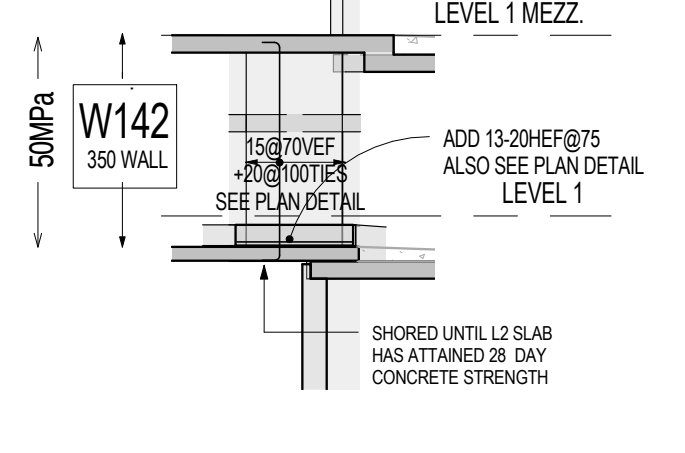
W142
300 WALL
LEVEL 1
50MPa

W142 WALL ELEVATION
S3-10 1 : 100

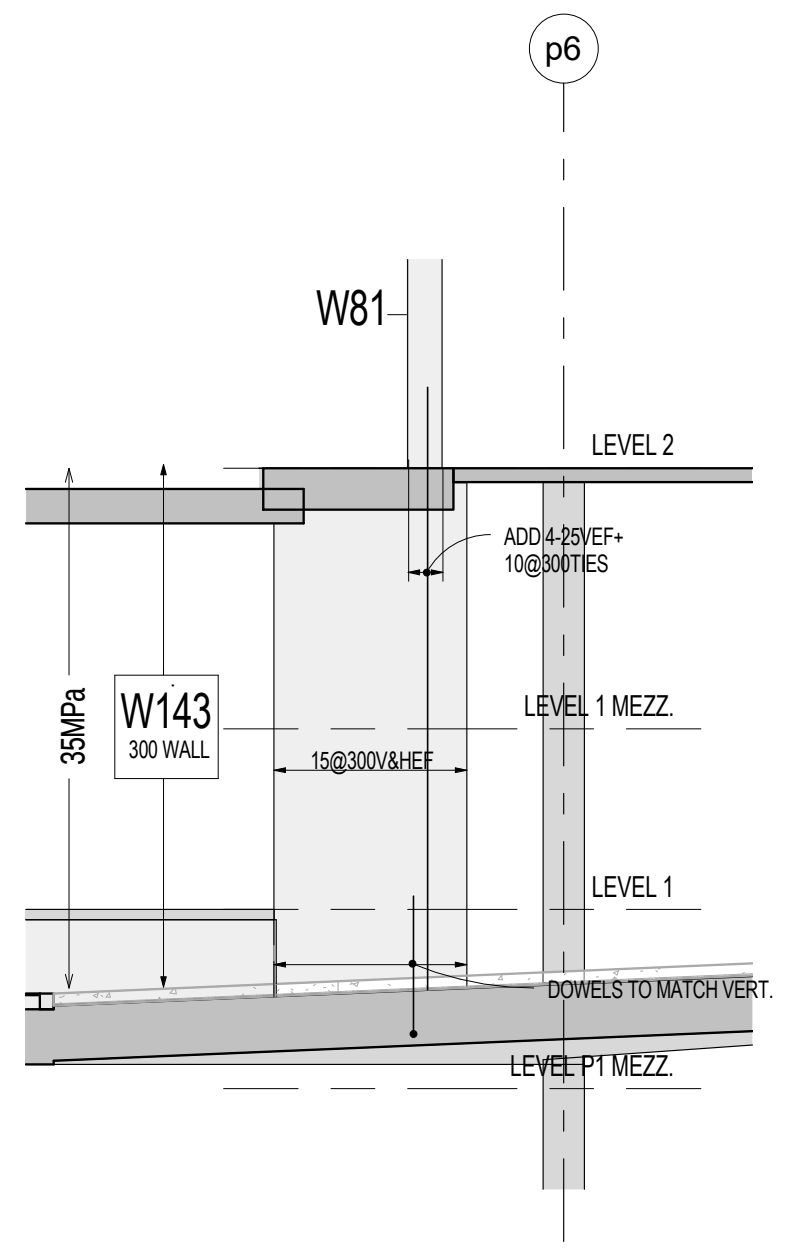
W81
W143
300 WALL
LEVEL 2
LEVEL 1 MEZZ.
LEVEL 1
LEVEL P1 MEZZ.
DOWELS TO MATCH VERT.
35MPa

W143 WALL ELEVATION
S3-10 1 : 100

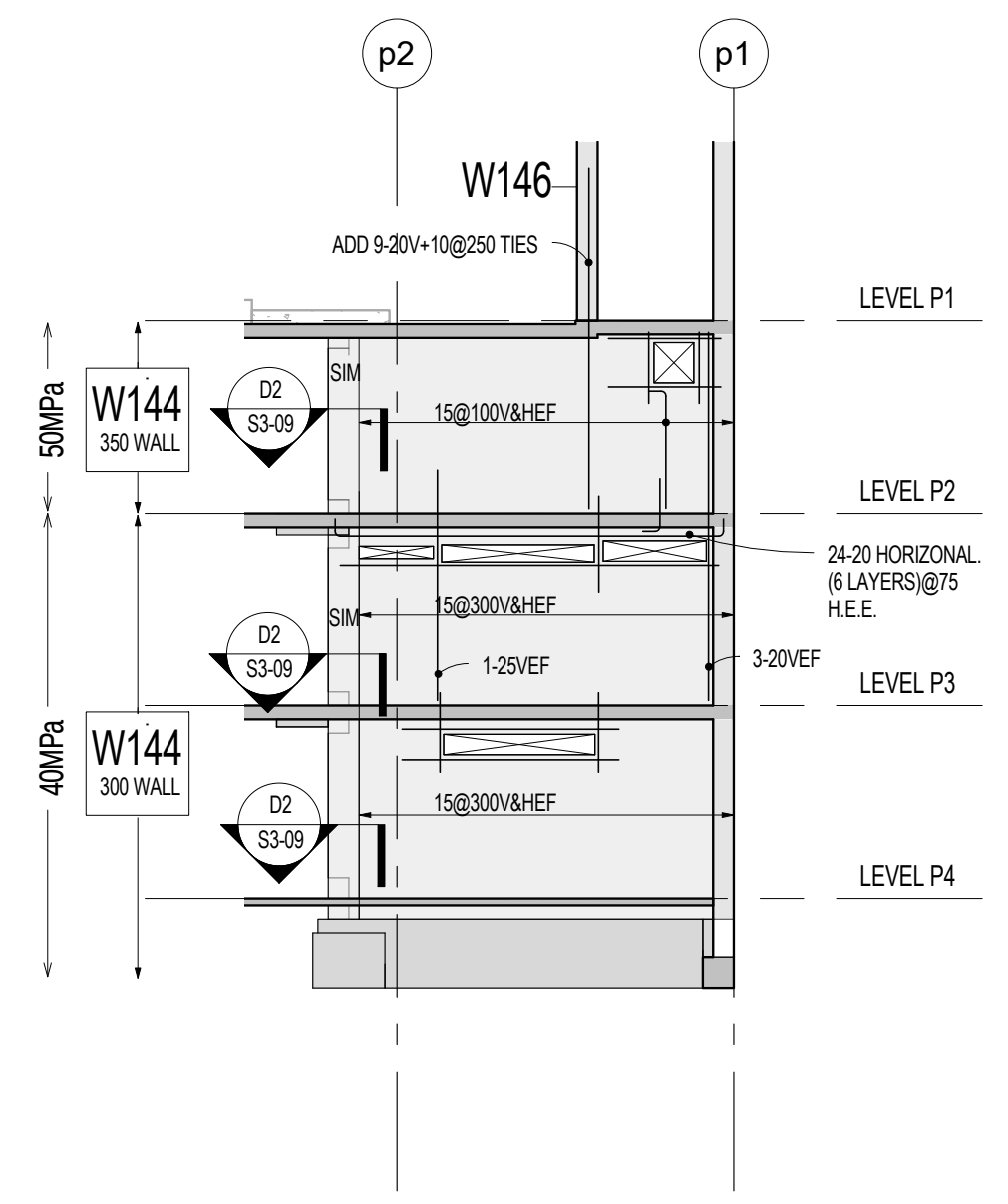
W146
W144
300 WALL
LEVEL P1
LEVEL P2
LEVEL P3
LEVEL P4
50MPa
40MPa

W144 WALL ELEVATION
S3-10 1 : 100

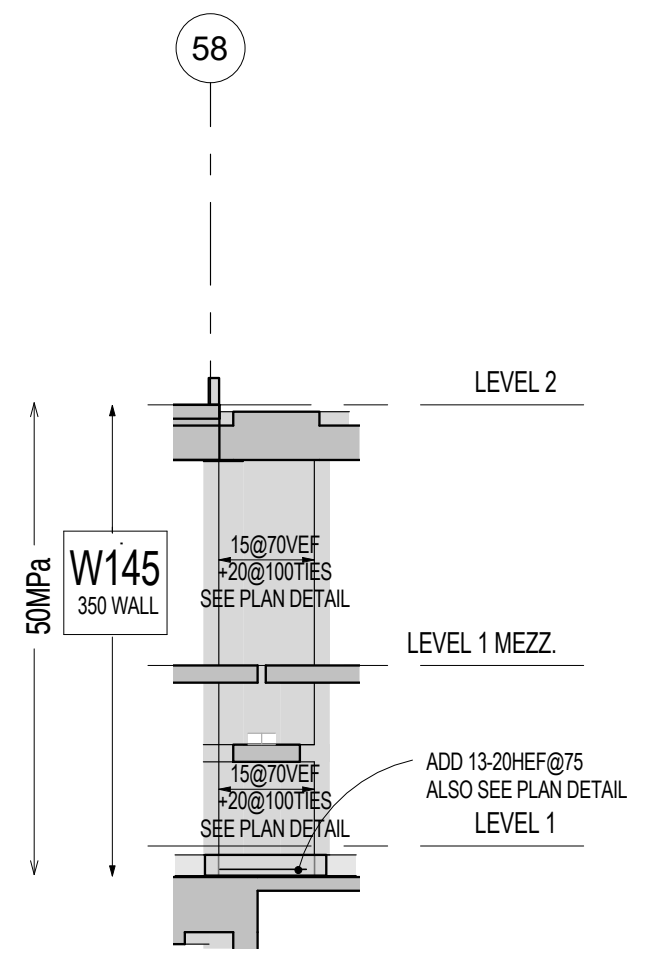
W145
300 WALL
LEVEL 2
LEVEL 1 MEZZ.
LEVEL 1
50MPa

W145 WALL ELEVATION
S3-10 1 : 100

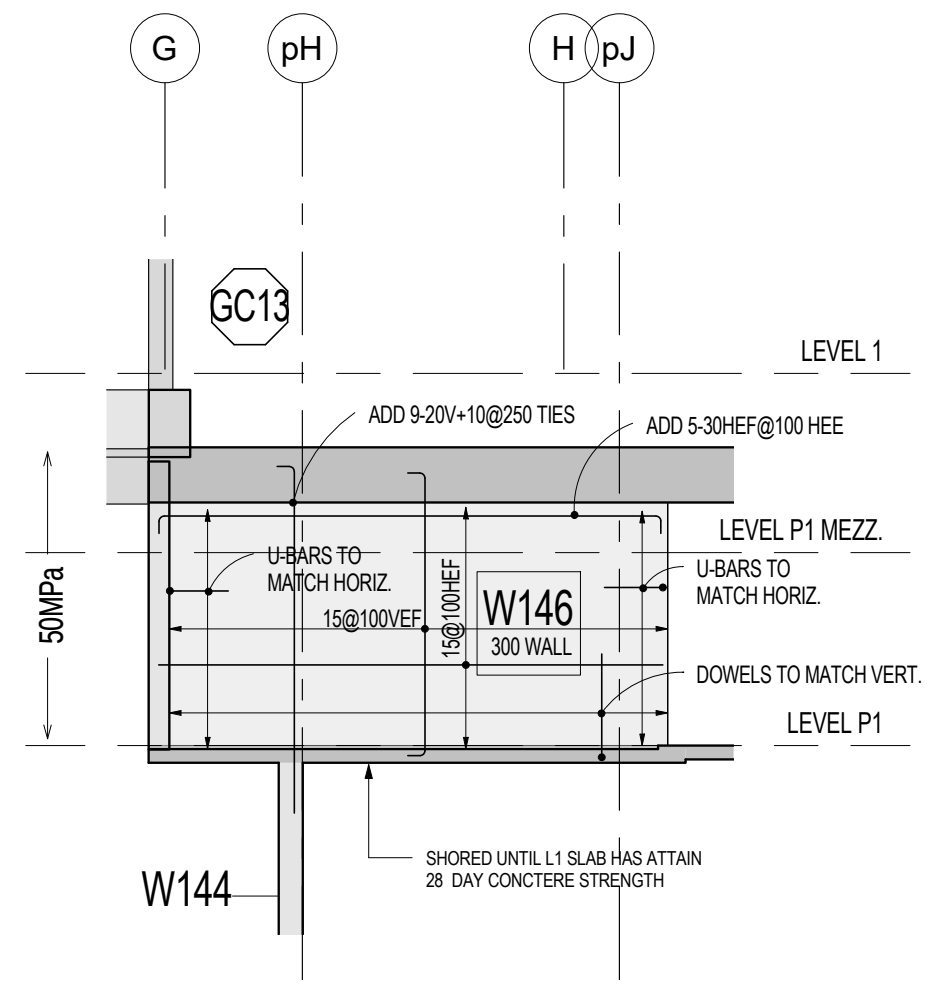
GC13
W146
300 WALL
W144
LEVEL 1
LEVEL P1 MEZZ.
LEVEL P1
DOWELS TO MATCH VERT.
50MPa

W146 WALL ELEVATION
S3-10 1 : 100

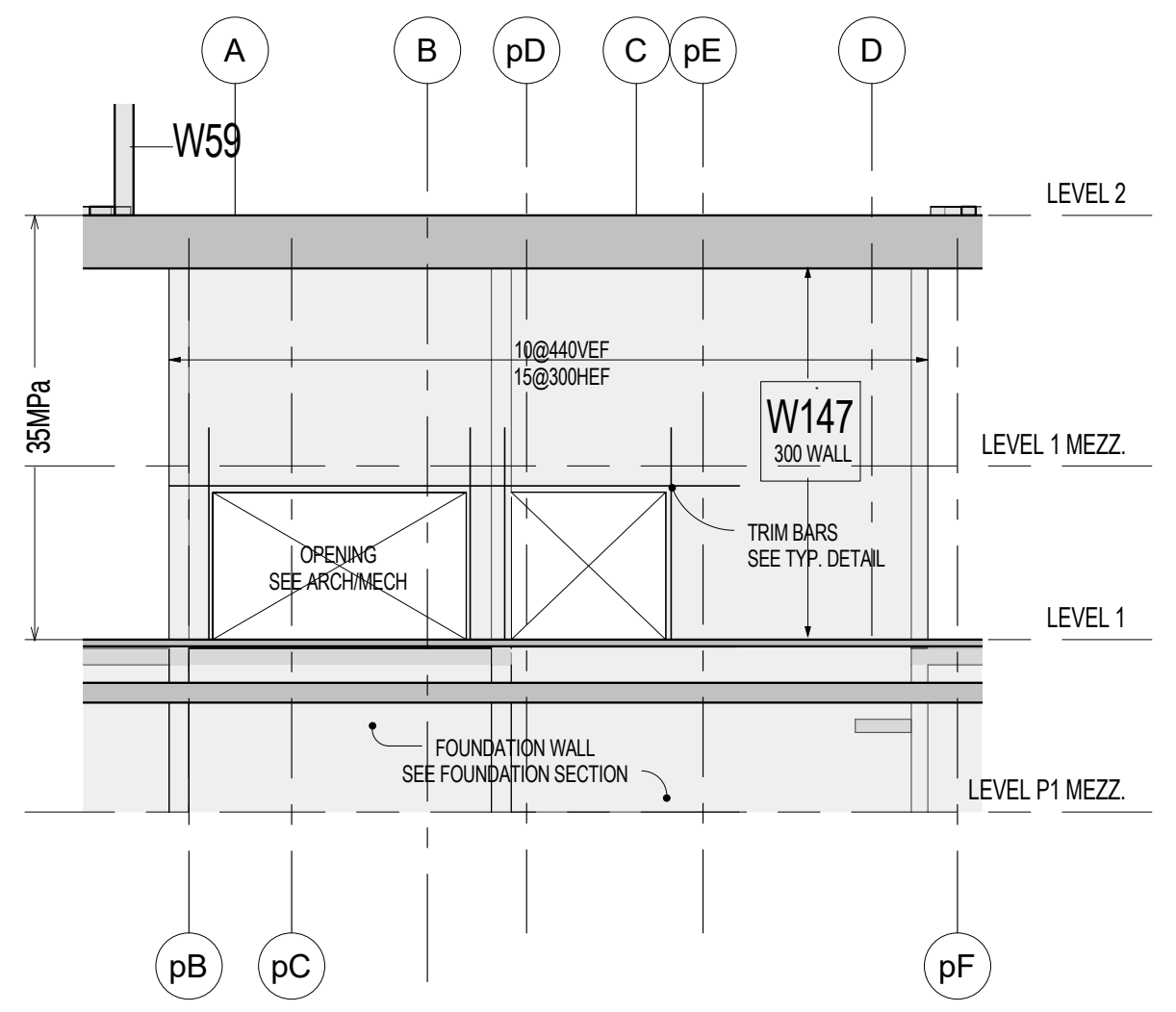
W59
W147
300 WALL
LEVEL 2
LEVEL 1 MEZZ.
LEVEL 1
LEVEL P1 MEZZ.
OPENING
FOUNDATION WALL SEE FOUNDATION SECTION
35MPa

W147 WALL ELEVATION
S3-10 1 : 100

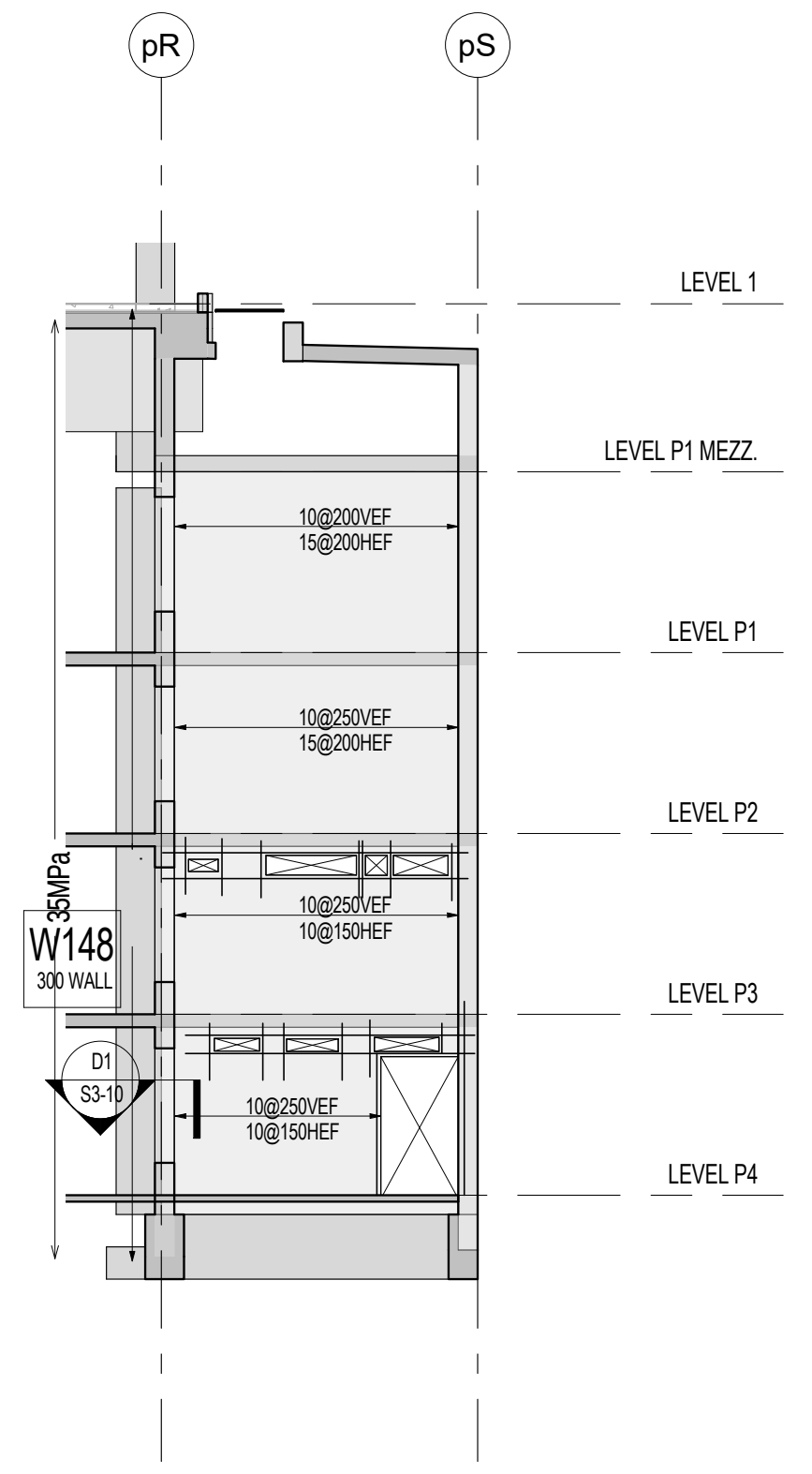
W148
300 WALL
LEVEL 1
LEVEL P1 MEZZ.
LEVEL P1
LEVEL P2
LEVEL P3
LEVEL P4

W148 WALL ELEVATION
S3-10 1 : 100

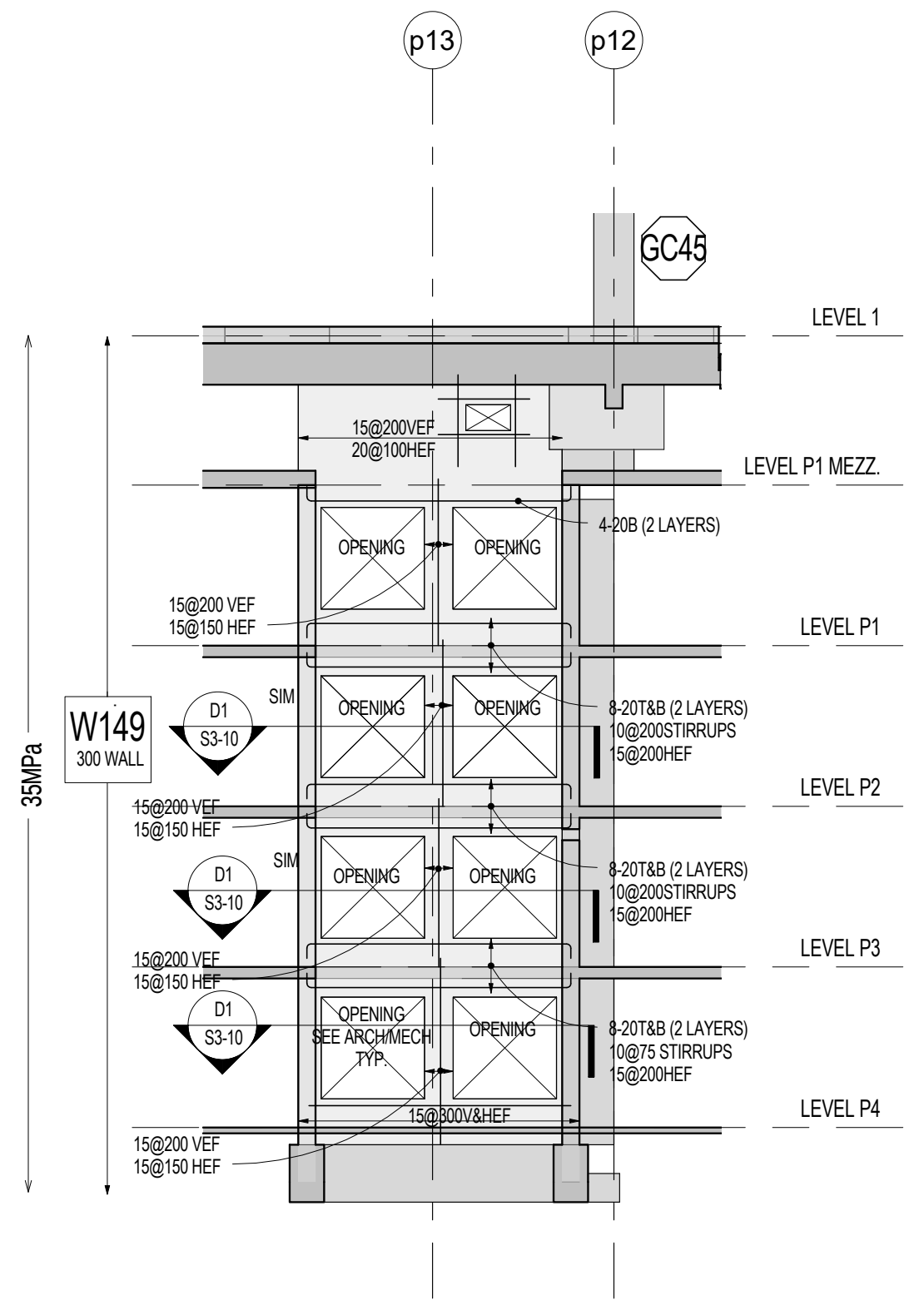
GC45
W149
300 WALL
LEVEL 1
LEVEL P1 MEZZ.
LEVEL P1
LEVEL P2
LEVEL P3
LEVEL P4
OPENING
35MPa

W149 WALL ELEVATION
S3-10 1 : 100

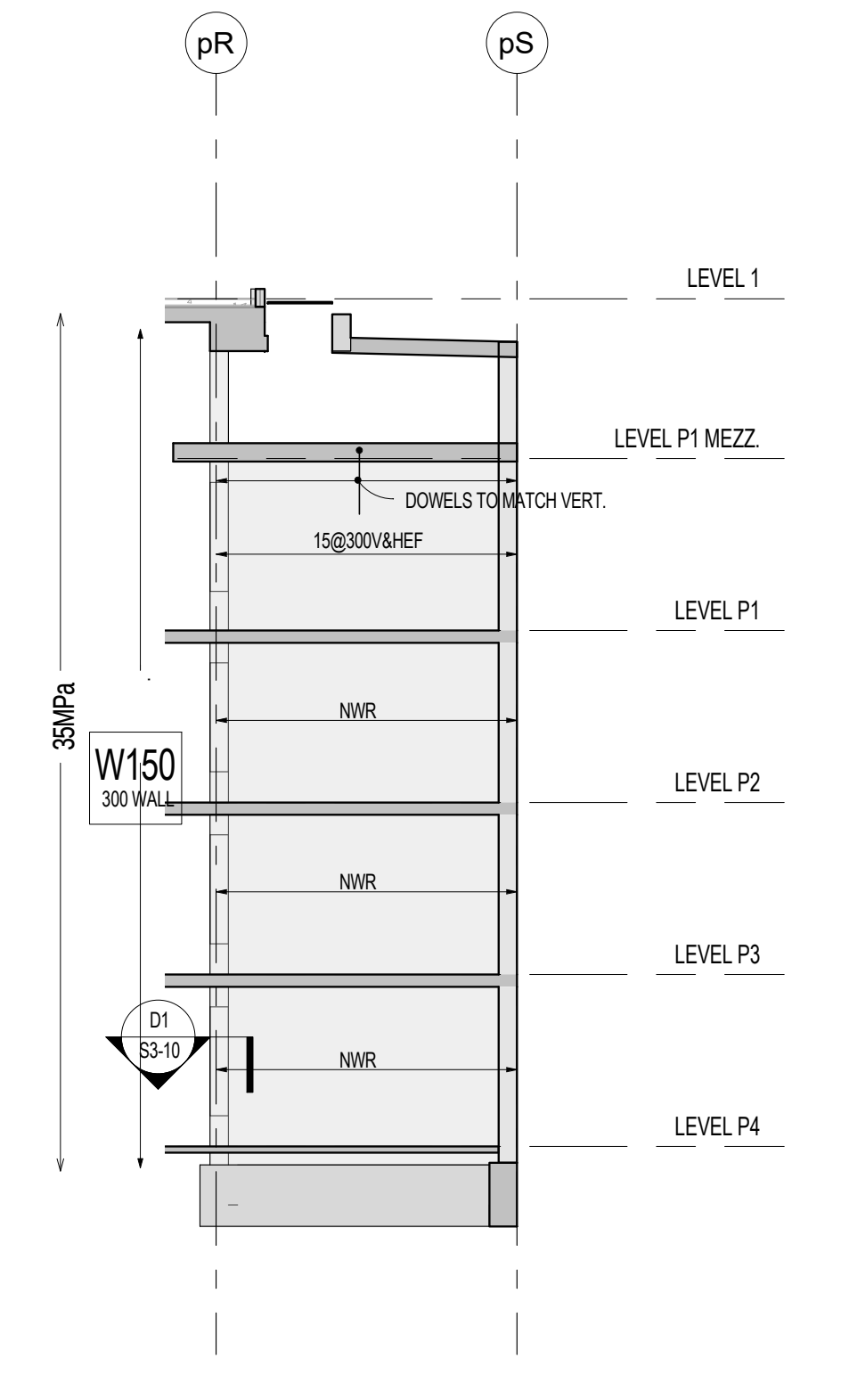
W150
300 WALL
LEVEL 1
LEVEL P1 MEZZ.
LEVEL P1
LEVEL P2
LEVEL P3
LEVEL P4
DOWELS TO MATCH VERT.

W150 WALL ELEVATION
S3-10 1 : 100

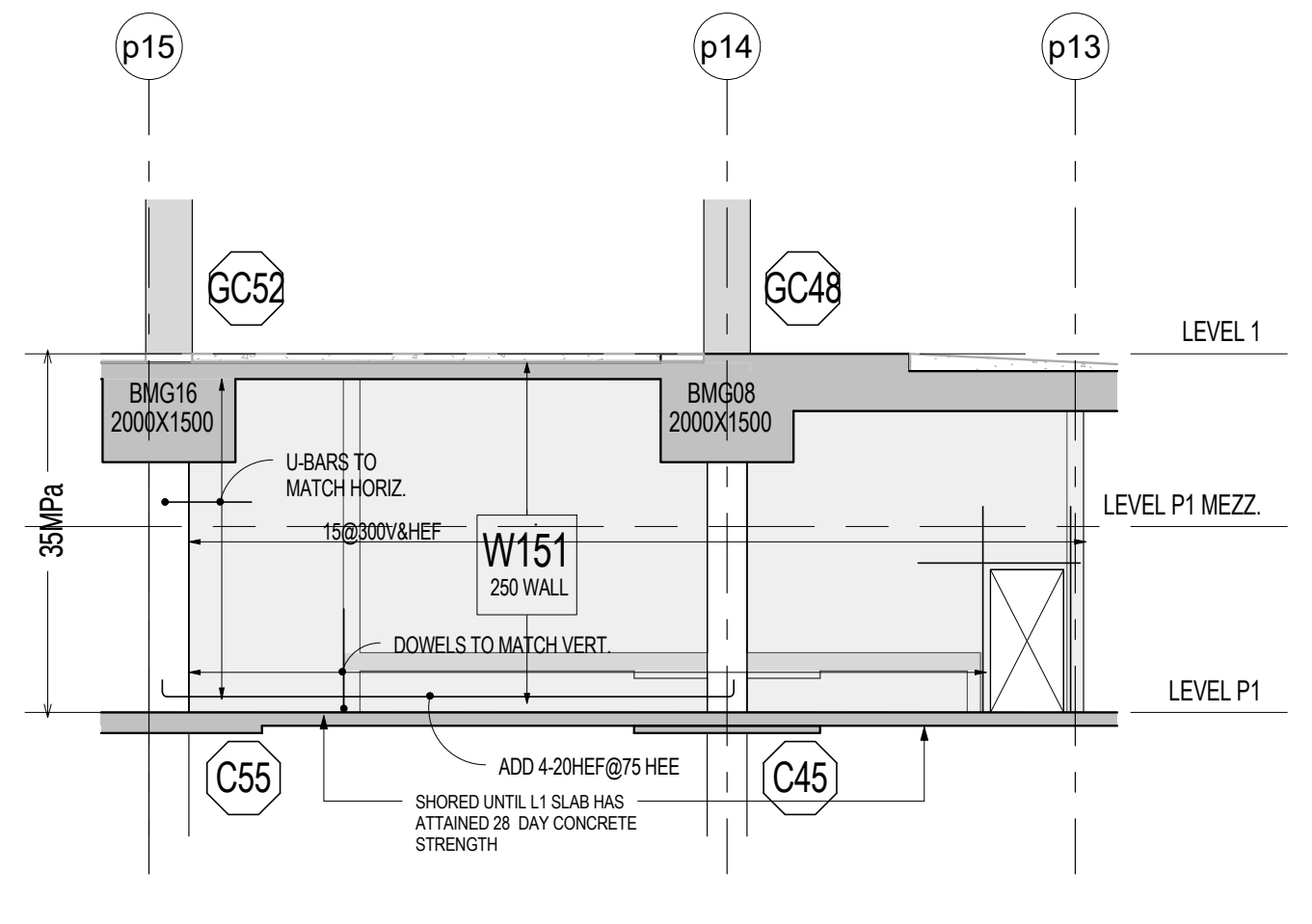
GC52
GC48
W151
250 WALL
C55
C45
LEVEL 1
LEVEL P1 MEZZ.
LEVEL P1
DOWELS TO MATCH VERT.
35MPa

W151 WALL ELEVATION
S3-10 1 : 100

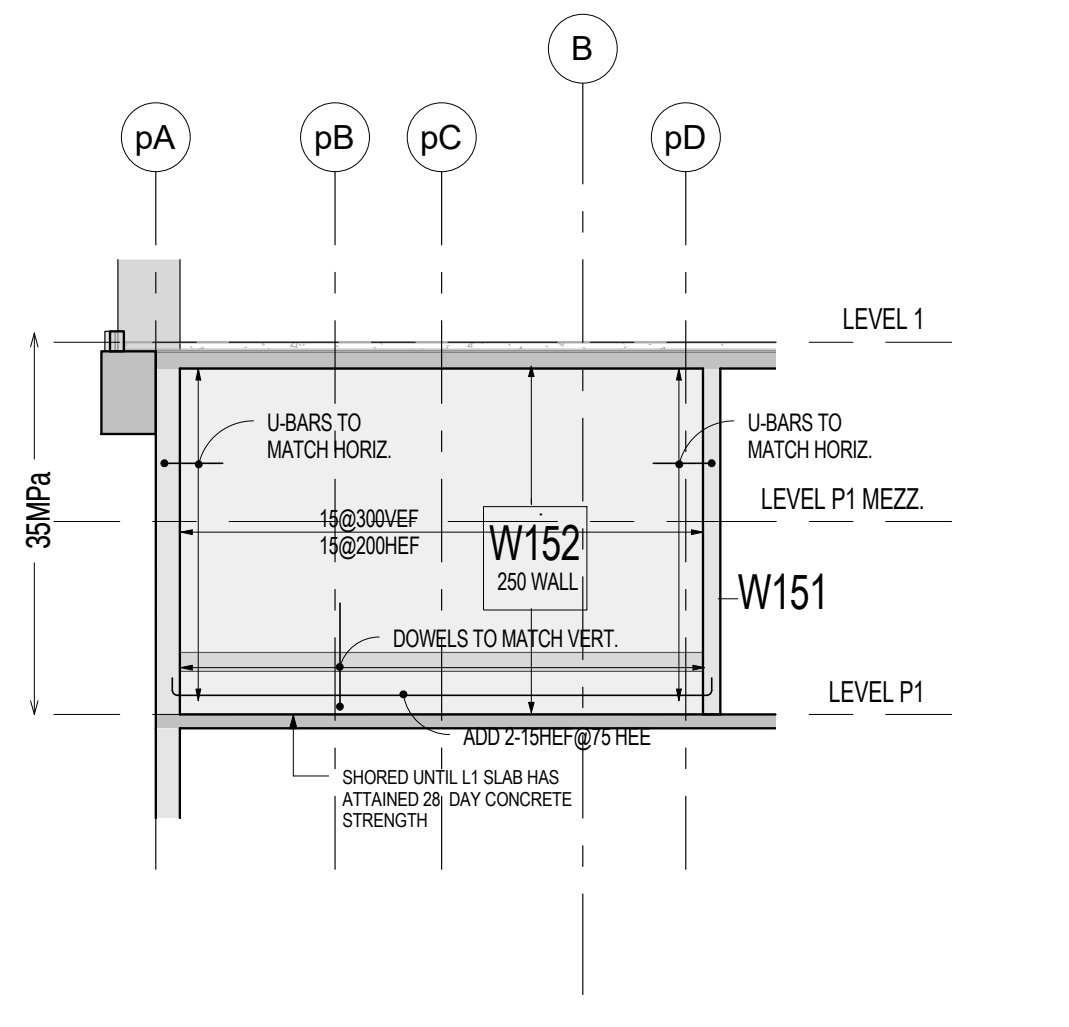
W152
250 WALL
W151
LEVEL 1
LEVEL P1 MEZZ.
LEVEL P1
DOWELS TO MATCH VERT.
35MPa

W152 WALL ELEVATION
S3-10 1 : 100

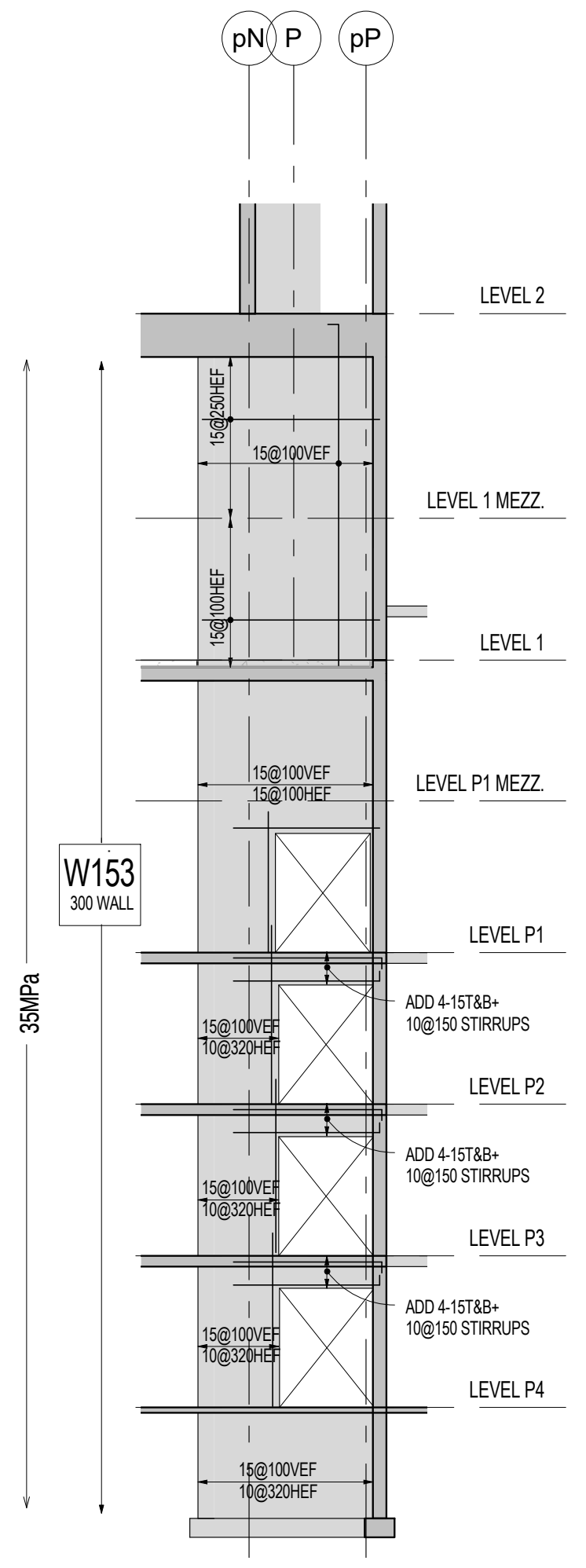
W153
300 WALL
LEVEL 2
LEVEL 1 MEZZ.
LEVEL 1
LEVEL P1 MEZZ.
LEVEL P1
LEVEL P2
LEVEL P3
LEVEL P4
35MPa

W153 WALL ELEVATION
S3-10 1 : 100

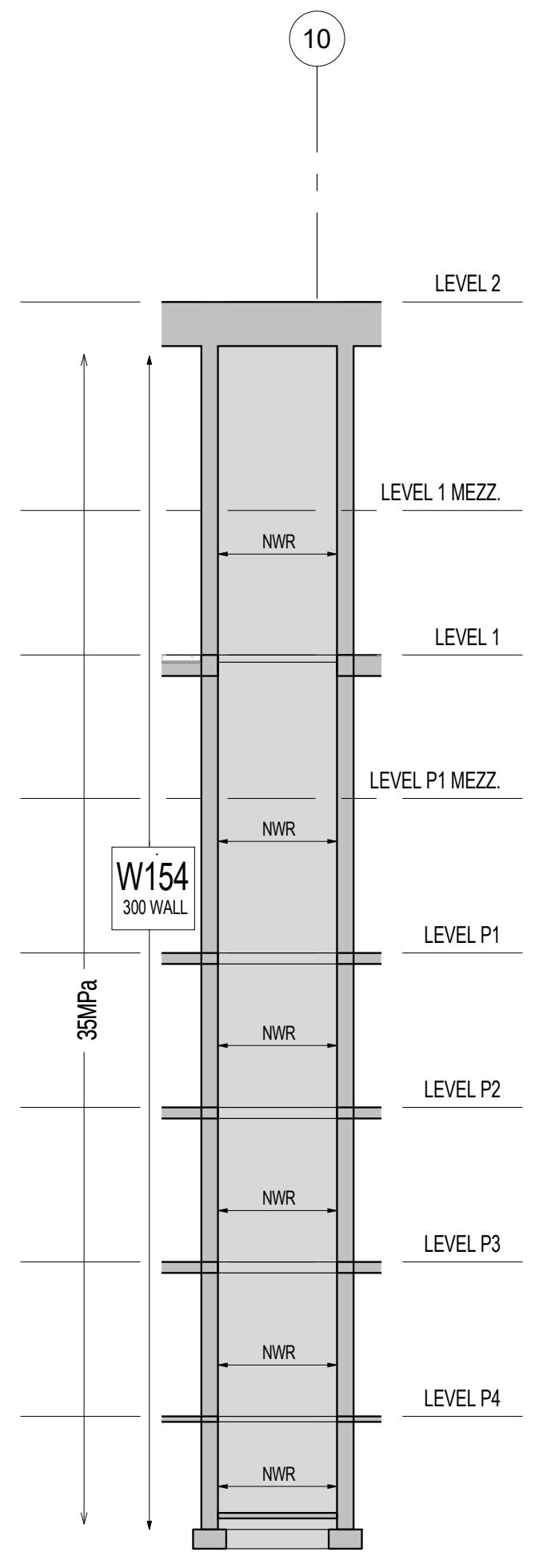
W154
300 WALL
LEVEL 2
LEVEL 1 MEZZ.
LEVEL 1
LEVEL P1 MEZZ.
LEVEL P1
LEVEL P2
LEVEL P3
LEVEL P4

W154 WALL ELEVATION
S3-10 1 : 100

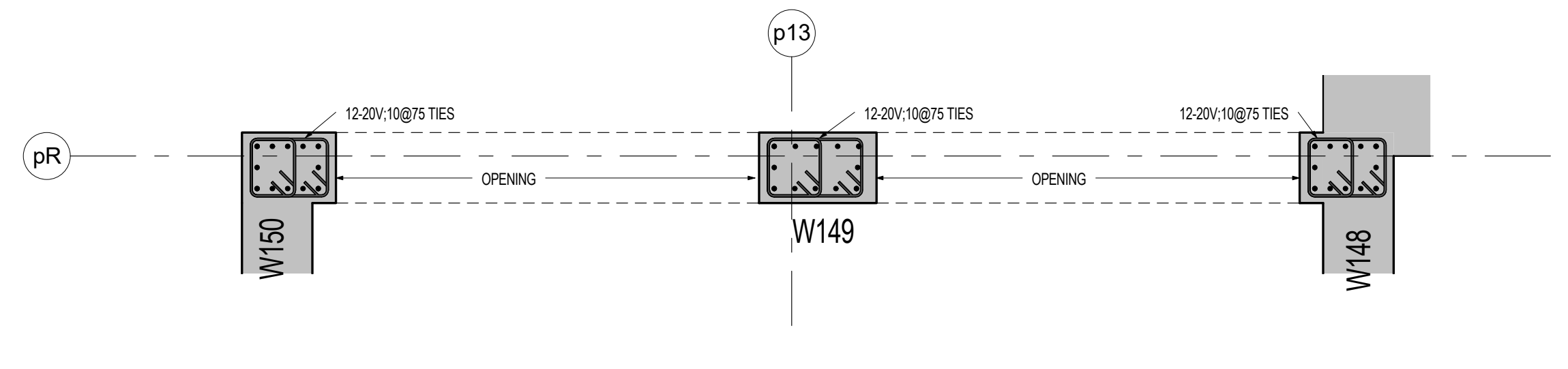
pR
p13
OPENING
OPENING
W150
W149
W148

D1 DETAIL
S3-10 1 : 20

REFER TO NOTES ON SHEET S3-01

Contractor Must Check And Verify All Dimensions On The Job.

Do Not Scale The Drawings.

All Drawings, Specifications And Related Documents Are The Copyright Of The Architect And Must Be Returned Upon Request.

Reproduction Of Drawings, Specifications And Related Documents In Part Or Whole Is Forbidden Without The Architects Written Permission.

This Drawing Is Not To Be Used For Construction Until Signed ByThe Architect.

Date:

DEC.18,2015 DEC.18,2015

stephenson ENGINEERING
2550 Victoria Park Ave. Suite 602
Toronto ON M2J 5A9 | Tel: (416) 635 9970
www.stephenson-eng.com | info@stephenson-eng.com

No	Revision	Date

No	Issued For	Date
7	ISSUED FOR STEEL TENDER	DEC.18,2015
4	BUILDING PERMIT RESUBMISSION	SEPT.21,2015
3	BUILDING PERMIT RESUBMISSION	JULY 22,2015
2	BUILDING PERMIT SUBMISSION	JUNE 12,2015
1	ISSUED FOR WT REVIEW	MAY 01,2015

AQUAVISTA
AT BAYSIDE TORONTO

Drawing Title
WALL ELEVATIONS

Project
Hines TRIDEL
AQUAVISTA
Block 3 - R3 & R4
Merchant's Whart
Toronto, ON

Scale
As indicated
Drawn by
DC
Checked by
BK/BBS
Project No.
20140031
Date
DEC.18,2015
Drawing No.
S3-10

Plot Date: 3/9/2016 10:02:42 AM

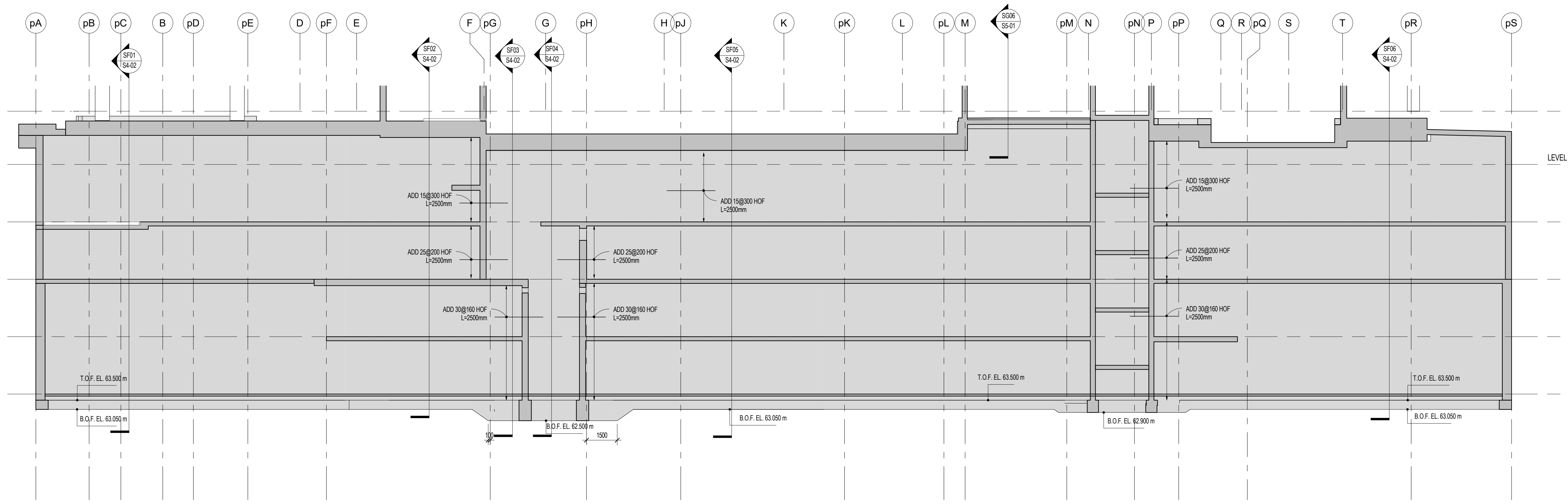
pA
pB
pC
B
pD
pE
D
pF
E
F
pG
G
pH
H
pJ
K
pK
L
pL
M
pM
N
pN
P
pP
Q
R
pQ
S
T
pR
pS
LEVEL 1
LEVEL P1 MEZZ
LEVEL P1
LEVEL P2
LEVEL P3
LEVEL P4
ADD 15@300 HOF L=2500mm
ADD 25@200 HOF L=2500mm
ADD 30@160 HOF L=2500mm
T.O.F. EL. 63.500 m
B.O.F. EL. 63.050 m
B.O.F. EL. 62.500 m
B.O.F. EL. 62.900 m
1500

WEST FOUNDATION ELEVATION
1 : 100

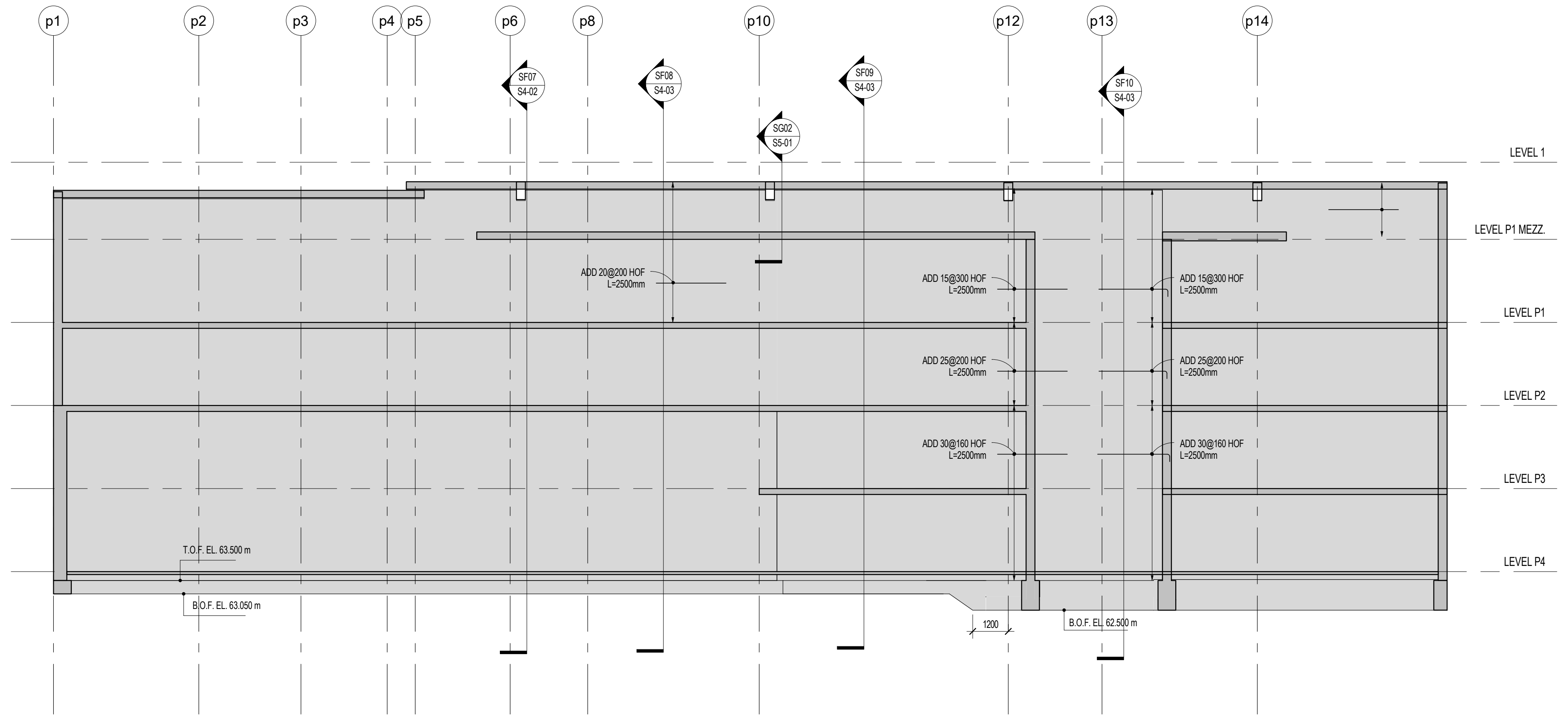
p1
p2
p3
p4
p5
p6
p8
p10
p12
p13
p14
LEVEL 1
LEVEL P1 MEZZ
LEVEL P1
LEVEL P2
LEVEL P3
LEVEL P4
ADD 15@300 HOF L=2500mm
ADD 25@200 HOF L=2500mm
ADD 30@160 HOF L=2500mm
T.O.F. EL. 63.500 m
B.O.F. EL. 63.050 m
B.O.F. EL. 62.500 m
1200

NORTH FOUNDATION ELEVATION 1
1 : 100

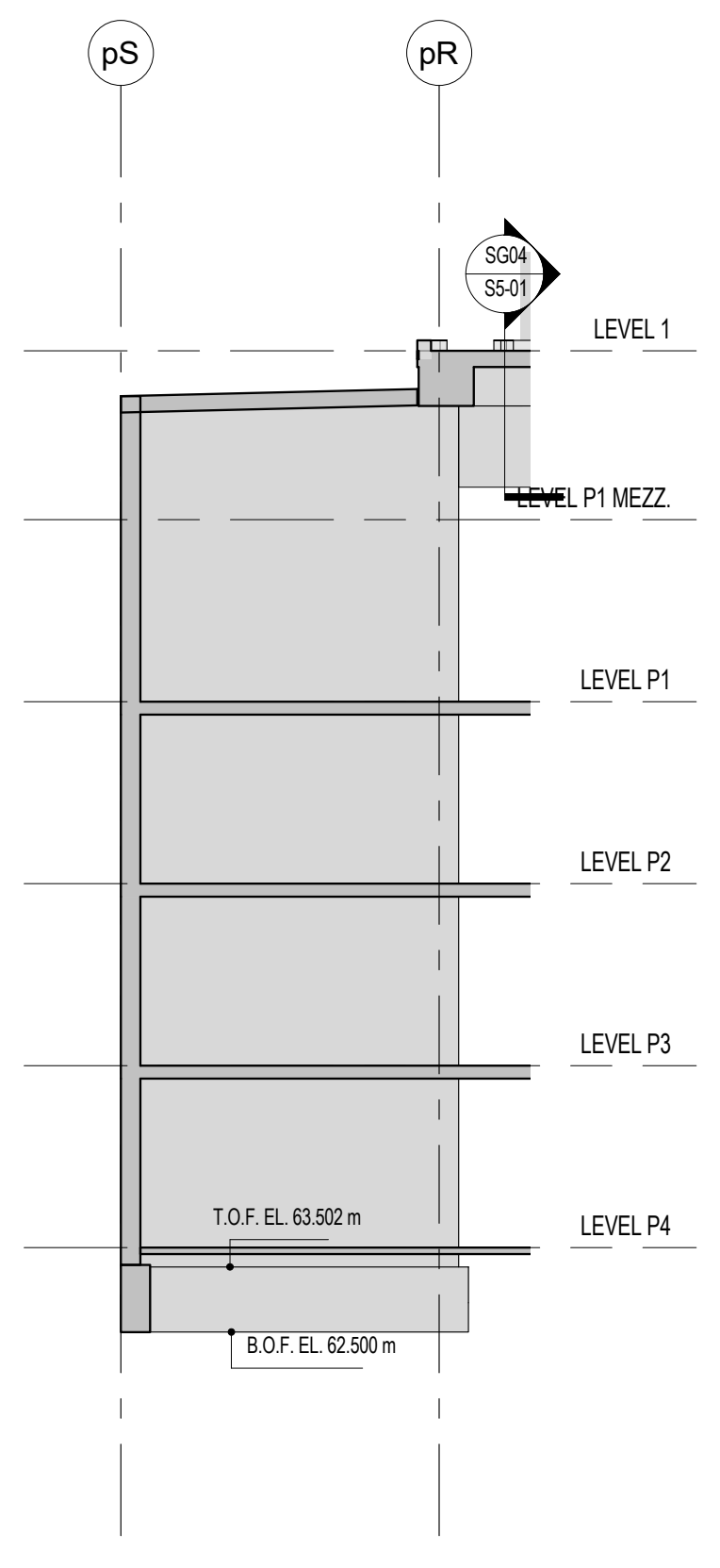
pS
pR
LEVEL 1
LEVEL P1 MEZZ
LEVEL P1
LEVEL P2
LEVEL P3
LEVEL P4
T.O.F. EL. 63.500 m
B.O.F. EL. 62.500 m

NORTH FOUNDATION ELEVATION 2
1 : 100

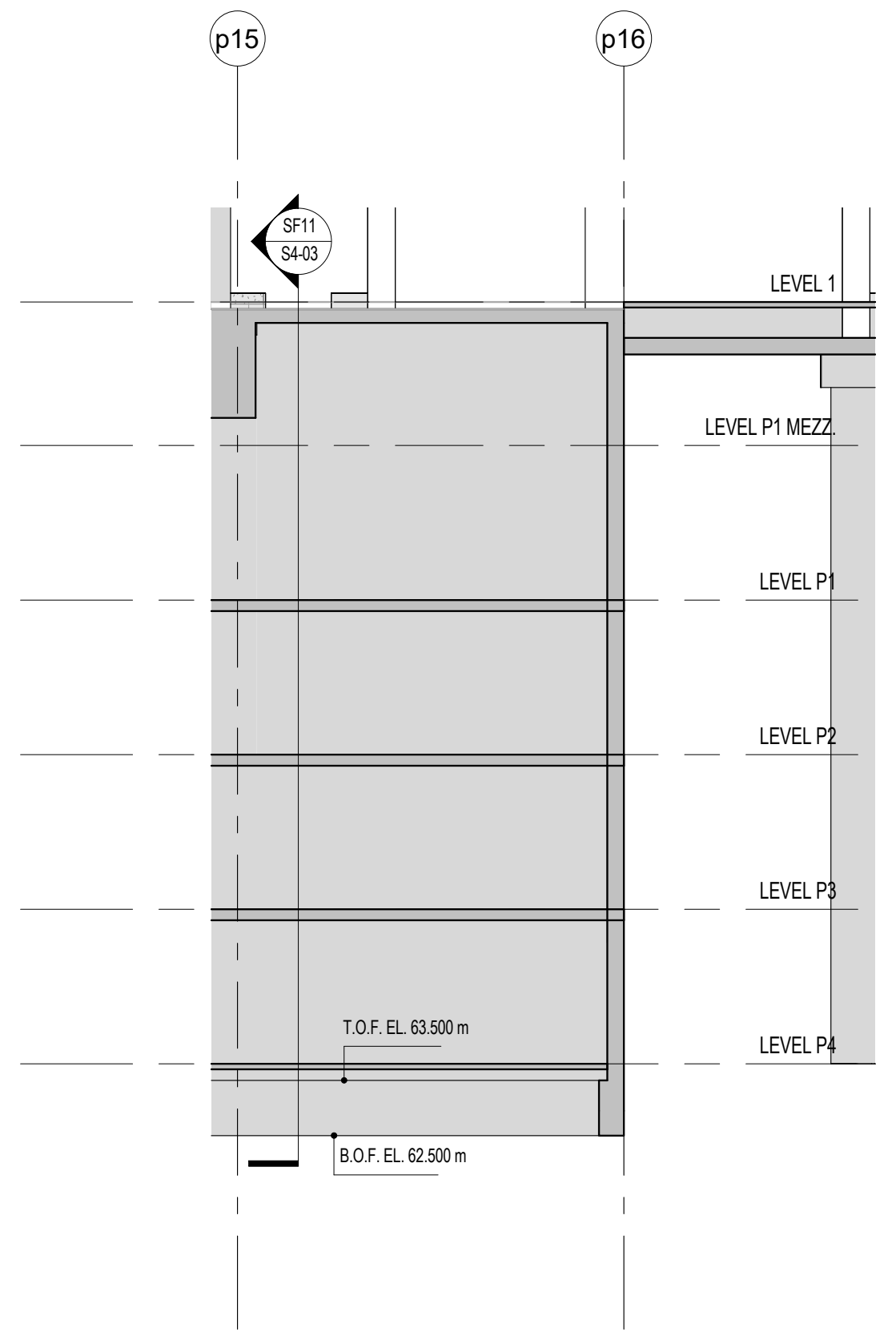
p15
p16
LEVEL 1
LEVEL P1 MEZZ
LEVEL P1
LEVEL P2
LEVEL P3
LEVEL P4
T.O.F. EL. 63.500 m
B.O.F. EL. 62.500 m

NORTH FOUNDATION ELEVATION 3
1 : 100

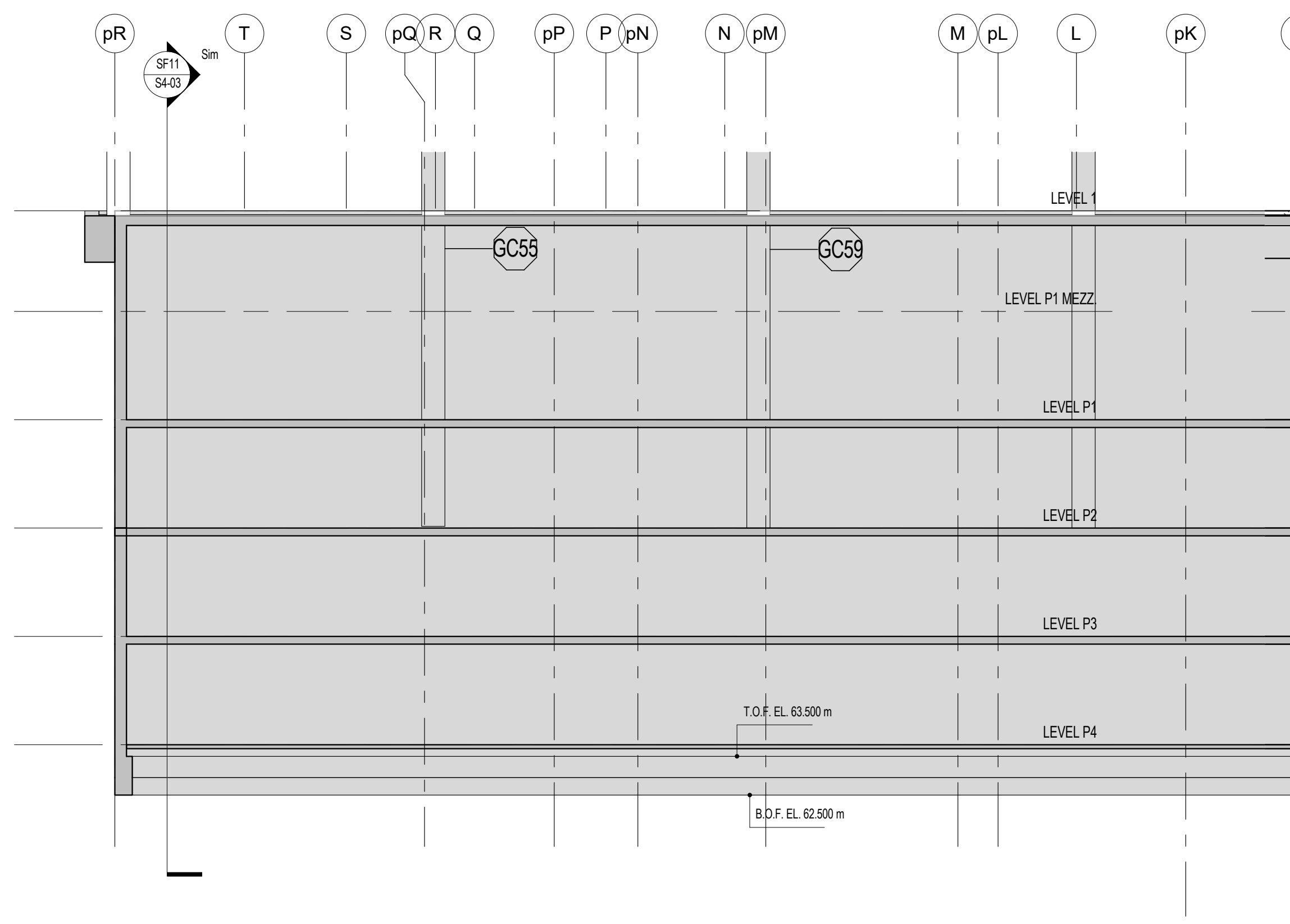
pR
T
S
pQ
R
Q
pP
P
pN
N
pM
M
pL
L
pK
GC55
GC59
LEVEL 1
LEVEL P1 MEZZ
LEVEL P1
LEVEL P2
LEVEL P3
LEVEL P4
T.O.F. EL. 63.500 m
B.O.F. EL. 62.500 m

EAST FOUNDATION ELEVATION 1
1 : 100

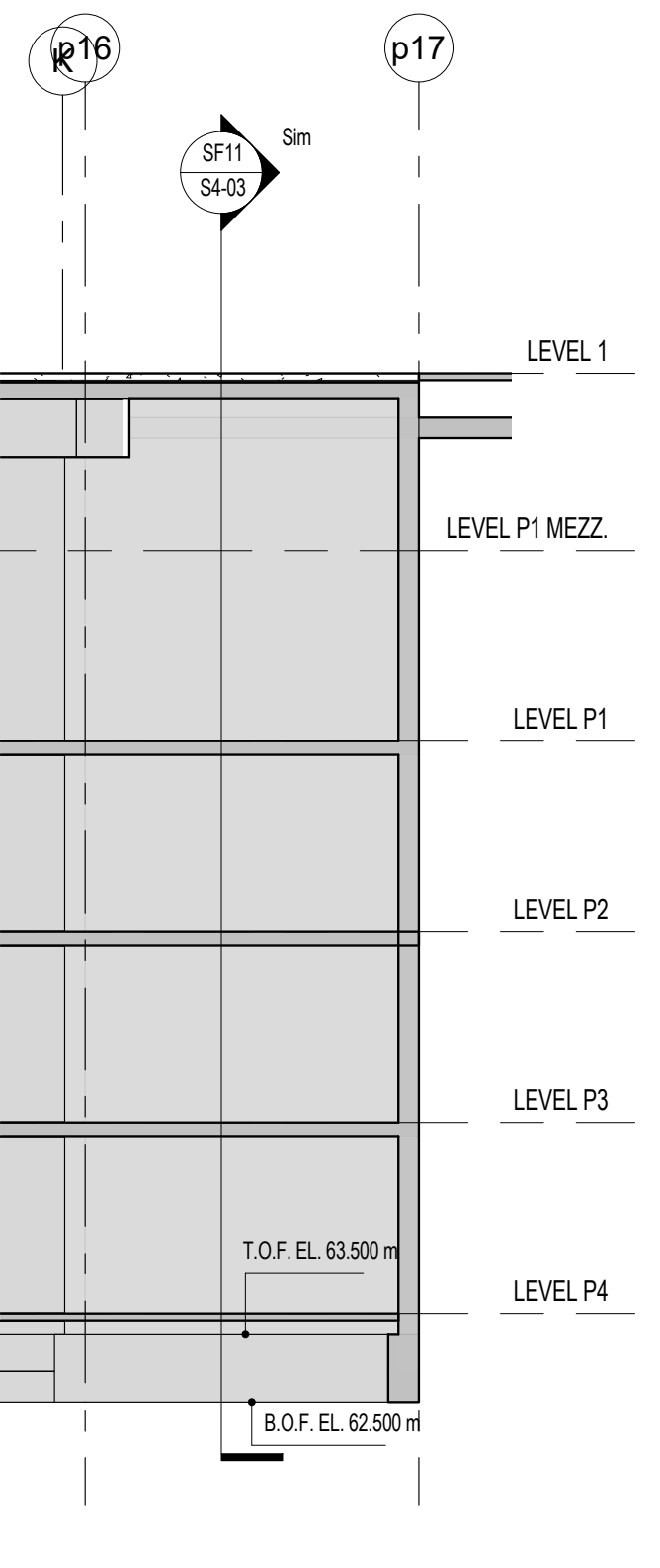
p16
p17
LEVEL 1
LEVEL P1 MEZZ
LEVEL P1
LEVEL P2
LEVEL P3
LEVEL P4
T.O.F. EL. 63.500 m
B.O.F. EL. 62.500 m

EAST FOUNDATION ELEVATION 2
1 : 100

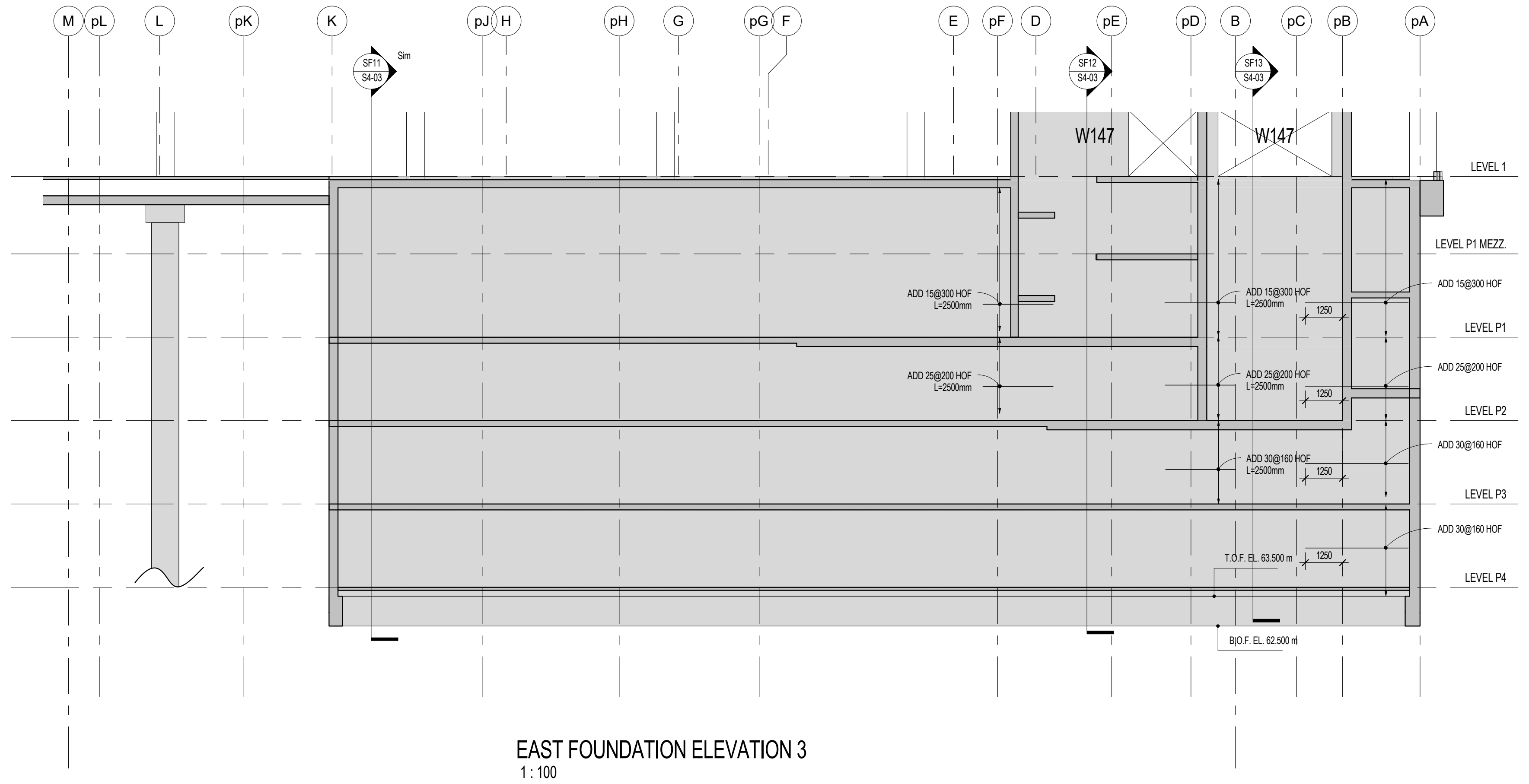
M
pL
L
pK
K
pJ
H
pH
G
pG
F
E
pF
D
pE
pD
B
pC
pB
pA
W147
W147
LEVEL 1
LEVEL P1 MEZZ
LEVEL P1
LEVEL P2
LEVEL P3
LEVEL P4
ADD 15@300 HOF L=2500mm
ADD 25@200 HOF L=2500mm
ADD 30@160 HOF L=2500mm
1250
T.O.F. EL. 63.500 m
B.O.F. EL. 62.500 m

EAST FOUNDATION ELEVATION 3
1 : 100

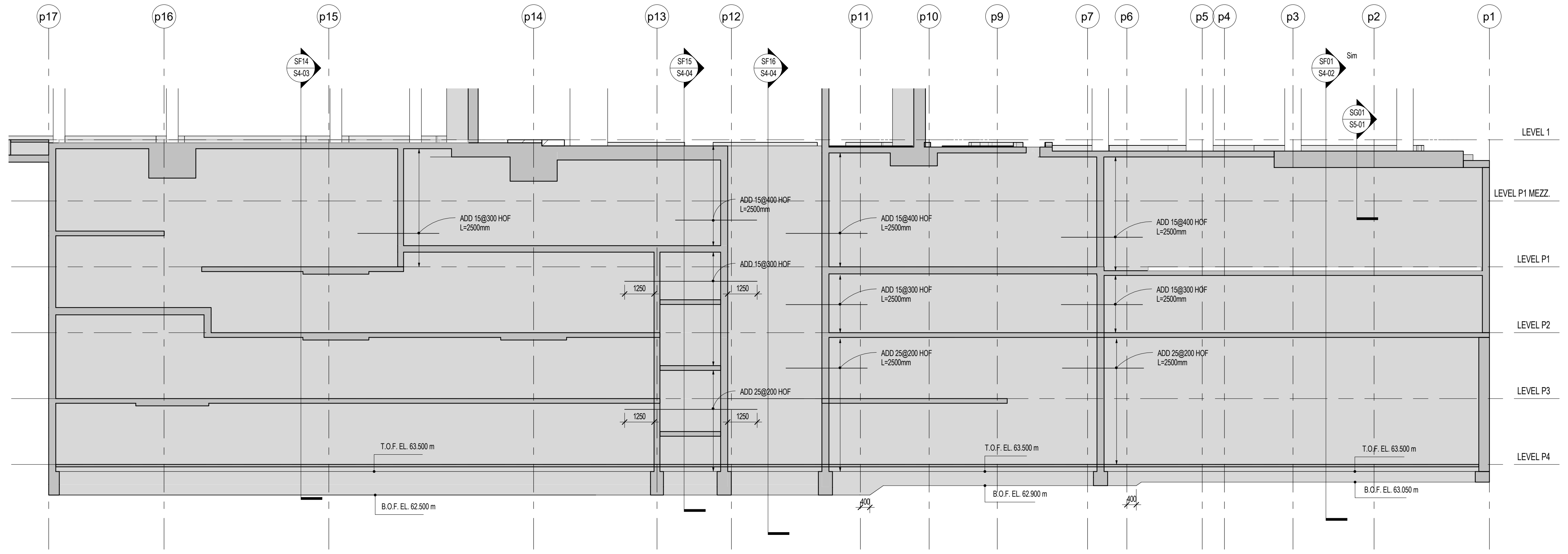
p17
p16
p15
p14
p13
p12
p11
p10
p9
p7
p6
p5
p4
p3
p2
p1
LEVEL 1
LEVEL P1 MEZZ
LEVEL P1
LEVEL P2
LEVEL P3
LEVEL P4
ADD 15@300 HOF L=2500mm
ADD 25@200 HOF L=2500mm
1250
T.O.F. EL. 63.500 m
B.O.F. EL. 62.500 m
B.O.F. EL. 62.900 m
B.O.F. EL. 63.050 m

SOUTH FOUNDATION ELEVATION
1 : 100

1. REFER TO TYPICAL DETAILS T-C56A AND TC56B FOR TLS (TENSION LAP SPLICE) AND CLS (COMPRESSION LAP SPLICE) LENGTHS.
2. OVERALL LENGTH OF REINFORCEMENT SHOULD ACCOUNT FOR VARIATIONS IN TOP OF FOOTING ELEVATION WHILE STILL MEETING THE MINIMUM LAP SPLICES INDICATED. VARIATIONS IN FOOTING ELEVATION DURING CONSTRUCTION WILL REQUIRE MODIFICATION TO REINFORCEMENT TO ACCOMMODATE ACCORDINGLY.

Contractor Must Check And Verify All Dimensions On The Job.

Do Not Scale The Drawings.

All Drawings, Specifications And Related Documents Are The Copyright Of The Architect And Must Be Returned Upon Request.

Reproduction Of Drawings, Specifications And Related Documents In Part Or Whole Is Forbidden Without The Architects Written Permission.

This Drawing Is Not To Be Used For Construction Until Signed ByThe Architect.

Date:

DEC.18,2015 DEC.18,2015

stephenson
ENGINEERING
2550 Victoria Park Ave. Suite 602
Toronto ON M2J 5A9 | Tel: (416) 635 9970
www.stephenson-eng.com | info@stephenson-eng.com

No	Revision	Date

No	Issued For	Date
7	ISSUED FOR STEEL TENDER	DEC.18,2015
4	BUILDING PERMIT RESUBMISSION	SEPT.21,2015
3	BUILDING PERMIT RESUBMISSION	JULY 22,2015
2	BUILDING PERMIT SUBMISSION	JUNE 12,2015
1	ISSUED FOR WT REVIEW	MAY 01,2015

AQUAVISTA
AT BAYSIDE TORONTO

Drawing Title
FOUNDATION
ELEVATIONS

Project
Hines TRIDEL
AQUAVISTA
Block 3 - R3 & R4
Merchant's Whart
Toronto, ON

Scale
As indicated
Drawn by
DC
Checked by
IA/BBS
Project No.
20140031
Date
DEC.18,2015
Drawing No.
S4-01

1. REFER TO TYPICAL DETAILS T-C56A AND TC56B FOR TLS (TENSION LAP SPLICE) AND CLS (COMPRESSION LAP SPLICE) LENGTHS.
2. OVERALL LENGTH OF REINFORCEMENT SHOULD ACCOUNT FOR VARIATIONS IN TOP OF FOOTING ELEVATION WHILE STILL MEETING THE MINIMUM LAP SPLICES INDICATED. VARIATIONS IN FOOTING ELEVATION DURING CONSTRUCTION WILL REQUIRE MODIFICATION TO REINFORCEMENT TO ACCOMMODATE ACCORDINGLY.

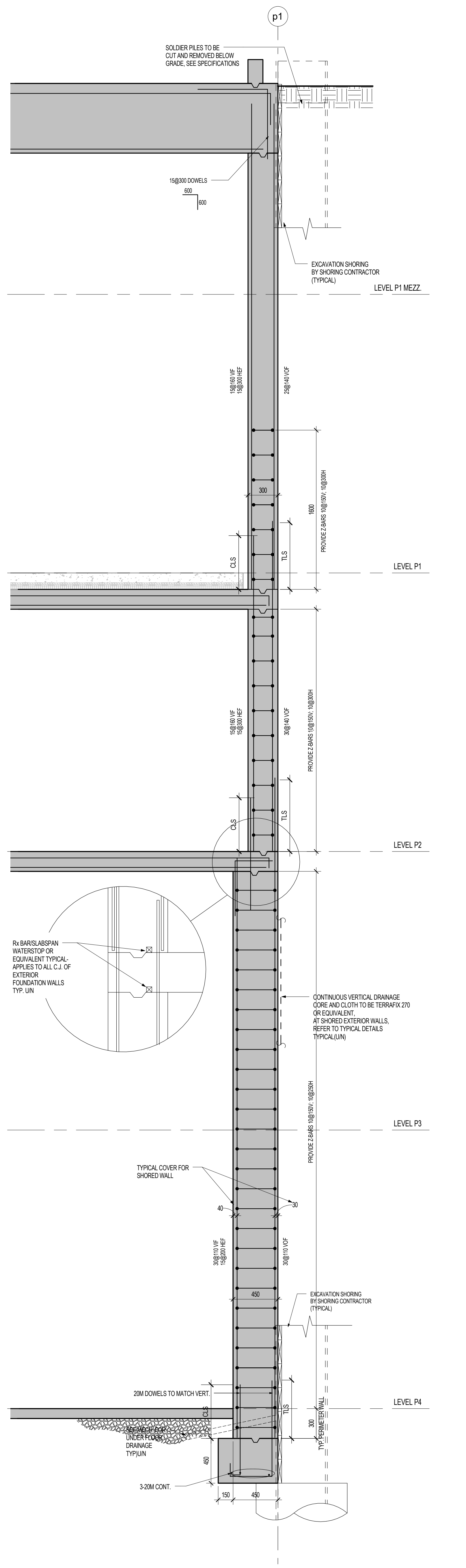
p1
SOLDIER PILES TO BE CUT AND REMOVED BELOW GRADE, SEE SPECIFICATIONS
15@300 DOWELS
600
600
EXCAVATION SHORING BY SHORING CONTRACTOR (TYPICAL)
LEVEL P1 MEZZ.
15@160 VIF
15@300 HEF
25@140 VOF
300
1600
PROVIDE Z-BARS 10@150V; 10@300H
CLS
TLS
LEVEL P1
15@160 VIF
15@300 HEF
30@140 VOF
PROVIDE Z-BARS 10@150V; 10@300H
LEVEL P2
Rx BAR/SLABSPAN WATERSTOP OR EQUIVALENT TYPICAL- APPLIES TO ALL C.J. OF EXTERIOR FOUNDATION WALLS TYP. U/N
CONTINUOUS VERTICAL DRAINAGE CORE AND CLOTH TO BE TERRAFIX 270 OR EQUIVALENT, AT SHORED EXTERIOR WALLS, REFER TO TYPICAL DETAILS TYPICAL(U/N)
PROVIDE Z-BARS 10@150V; 10@250H
LEVEL P3
TYPICAL COVER FOR SHORED WALL
40
30
30@110 VIF
15@200 HEF
30@110 VOF
450
EXCAVATION SHORING BY SHORING CONTRACTOR (TYPICAL)
20M DOWELS TO MATCH VERT.
LEVEL P4
CLS
TLS
300
TYP. PERIMETER WALL
SEE MECH. FOR UNDER FLOOR DRAINAGE TYP)U/N
450
3-20M CONT.
150
450

SF01
S4-02
SECTION
1 : 20

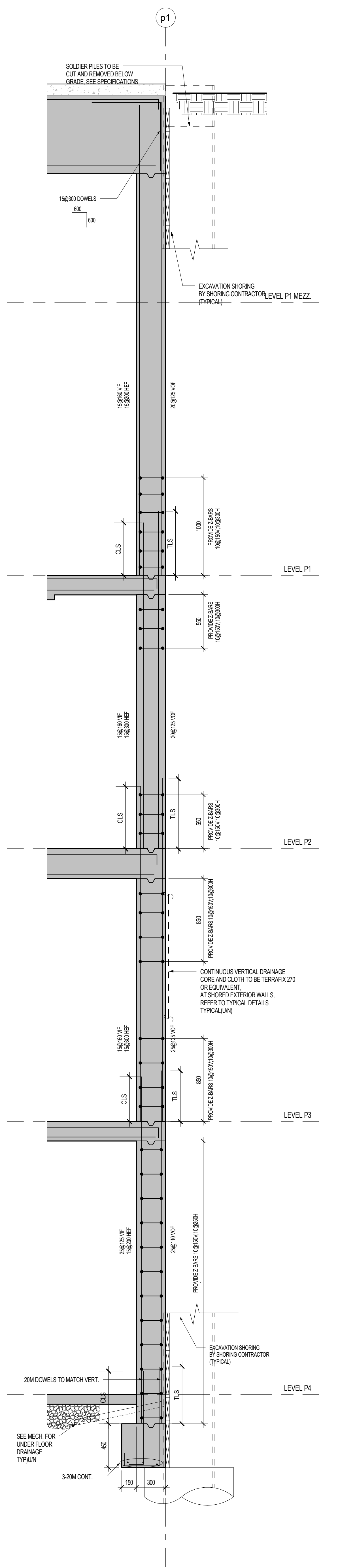
p1
SOLDIER PILES TO BE CUT AND REMOVED BELOW GRADE, SEE SPECIFICATIONS
15@300 DOWELS
EXCAVATION SHORING BY SHORING CONTRACTOR (TYPICAL)
LEVEL P1 MEZZ.
LEVEL P1
LEVEL P2
CONTINUOUS VERTICAL DRAINAGE CORE AND CLOTH TO BE TERRAFIX 270 OR EQUIVALENT, AT SHORED EXTERIOR WALLS, REFER TO TYPICAL DETAILS TYPICAL(U/N)
LEVEL P3
EXCAVATION SHORING BY SHORING CONTRACTOR (TYPICAL)
20M DOWELS TO MATCH VERT.
LEVEL P4
SEE MECH. FOR UNDER FLOOR DRAINAGE TYP)U/N
3-20M CONT.
150
300

SF02
S4-02
SECTION
1 : 20

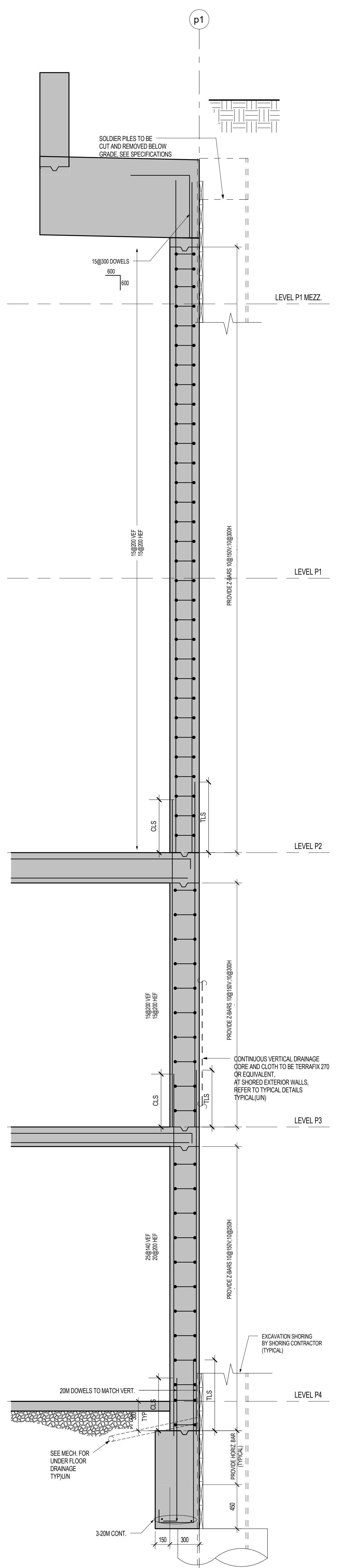
p1
SOLDIER PILES TO BE CUT AND REMOVED BELOW GRADE, SEE SPECIFICATIONS
15@300 DOWELS
LEVEL P1 MEZZ.
LEVEL P1
LEVEL P2
CONTINUOUS VERTICAL DRAINAGE CORE AND CLOTH TO BE TERRAFIX 270 OR EQUIVALENT, AT SHORED EXTERIOR WALLS, REFER TO TYPICAL DETAILS TYPICAL(U/N)
LEVEL P3
EXCAVATION SHORING BY SHORING CONTRACTOR (TYPICAL)
20M DOWELS TO MATCH VERT.
LEVEL P4
SEE MECH. FOR UNDER FLOOR DRAINAGE TYP)U/N
3-20M CONT.

SF03
S4-02
SECTION
1 : 20

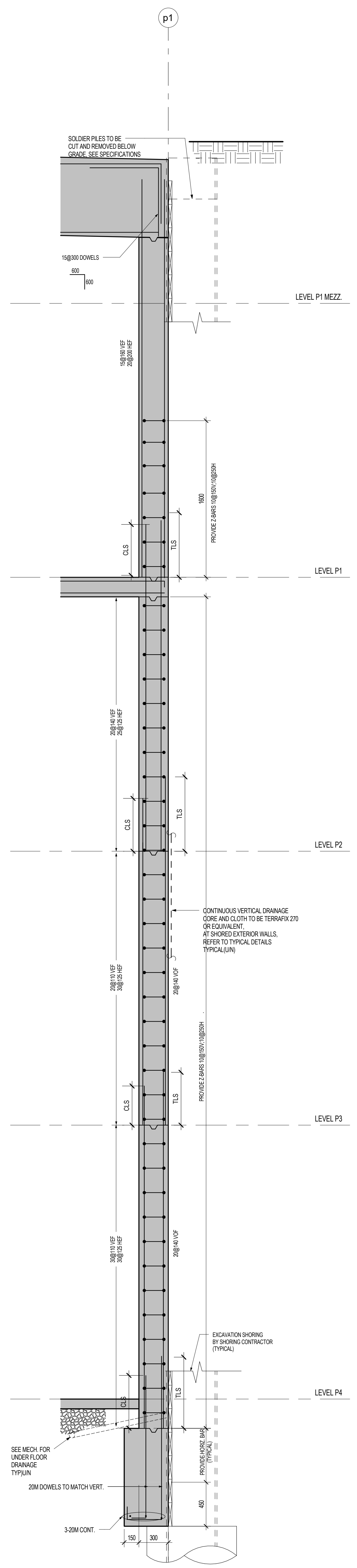
p1
SOLDIER PILES TO BE CUT AND REMOVED BELOW GRADE, SEE SPECIFICATIONS
15@300 DOWELS
LEVEL P1 MEZZ.
LEVEL P1
LEVEL P2
CONTINUOUS VERTICAL DRAINAGE CORE AND CLOTH TO BE TERRAFIX 270 OR EQUIVALENT, AT SHORED EXTERIOR WALLS, REFER TO TYPICAL DETAILS TYPICAL(U/N)
LEVEL P3
EXCAVATION SHORING BY SHORING CONTRACTOR (TYPICAL)
LEVEL P4
SEE MECH. FOR UNDER FLOOR DRAINAGE TYP)U/N
20M DOWELS TO MATCH VERT.
3-20M CONT.

SF04
S4-02
SECTION
1 : 20

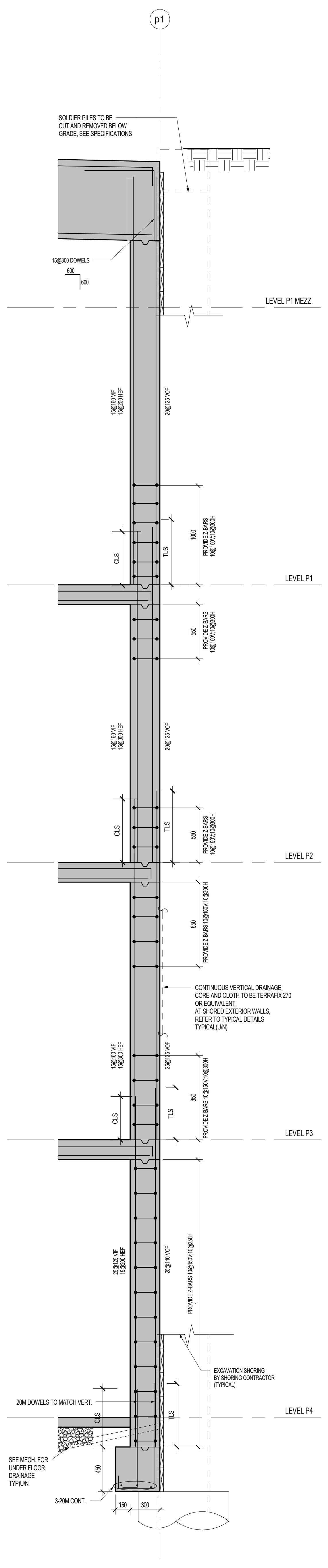
p1
SOLDIER PILES TO BE CUT AND REMOVED BELOW GRADE, SEE SPECIFICATIONS
LEVEL P1 MEZZ.
LEVEL P1
LEVEL P2
CONTINUOUS VERTICAL DRAINAGE CORE AND CLOTH TO BE TERRAFIX 270 OR EQUIVALENT, AT SHORED EXTERIOR WALLS, REFER TO TYPICAL DETAILS TYPICAL(U/N)
LEVEL P3
EXCAVATION SHORING BY SHORING CONTRACTOR (TYPICAL)
20M DOWELS TO MATCH VERT.
LEVEL P4
SEE MECH. FOR UNDER FLOOR DRAINAGE TYP)U/N
3-20M CONT.

SF05
S4-02
SECTION
1 : 20

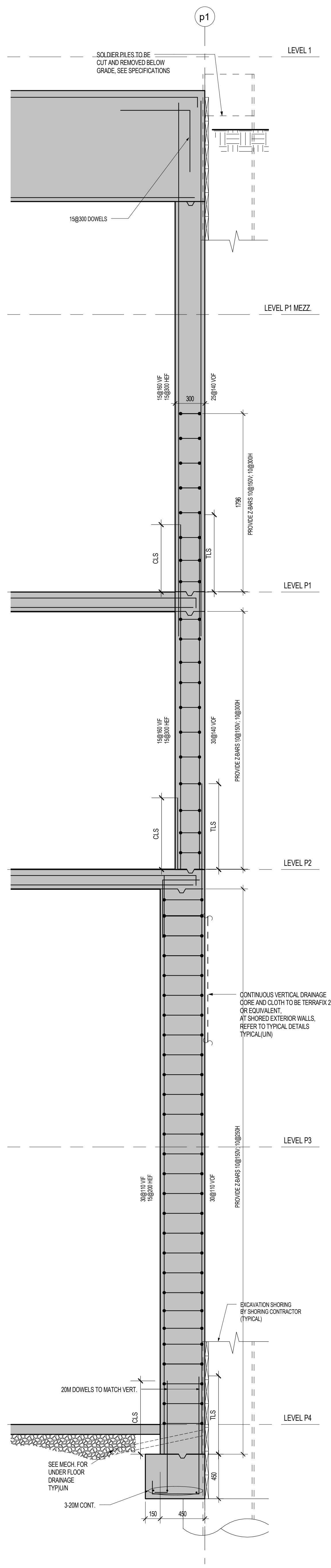
p1
LEVEL 1
SOLDIER PILES TO BE CUT AND REMOVED BELOW GRADE, SEE SPECIFICATIONS
15@300 DOWELS
LEVEL P1 MEZZ.
LEVEL P1
LEVEL P2
CONTINUOUS VERTICAL DRAINAGE CORE AND CLOTH TO BE TERRAFIX 270 OR EQUIVALENT, AT SHORED EXTERIOR WALLS, REFER TO TYPICAL DETAILS TYPICAL(U/N)
LEVEL P3
EXCAVATION SHORING BY SHORING CONTRACTOR (TYPICAL)
20M DOWELS TO MATCH VERT.
LEVEL P4
SEE MECH. FOR UNDER FLOOR DRAINAGE TYP)U/N
3-20M CONT.

SF06
S4-02
SECTION
1 : 20

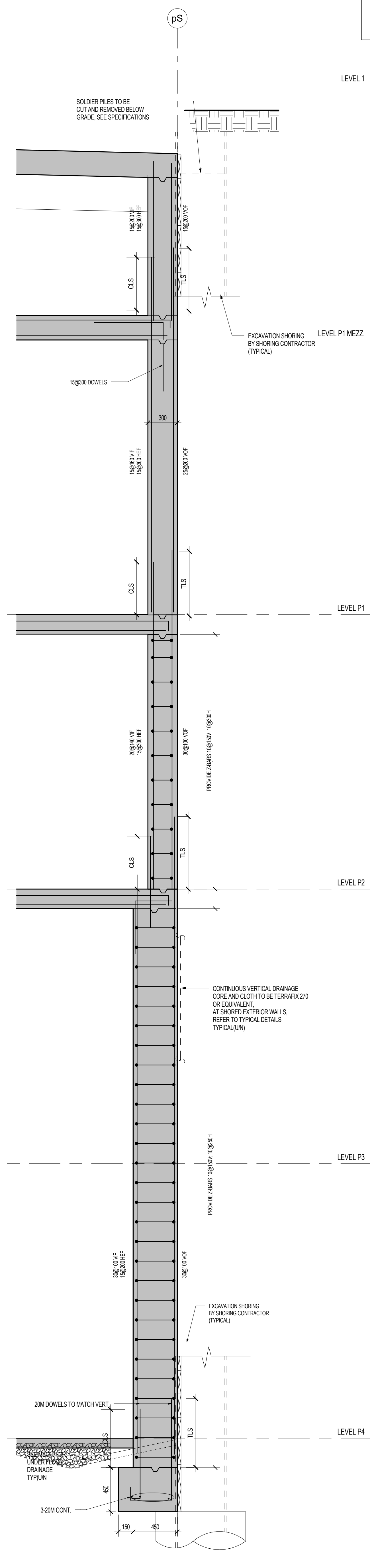
pS
LEVEL 1
SOLDIER PILES TO BE CUT AND REMOVED BELOW GRADE, SEE SPECIFICATIONS
EXCAVATION SHORING BY SHORING CONTRACTOR (TYPICAL)
LEVEL P1 MEZZ.
15@300 DOWELS
LEVEL P1
LEVEL P2
CONTINUOUS VERTICAL DRAINAGE CORE AND CLOTH TO BE TERRAFIX 270 OR EQUIVALENT, AT SHORED EXTERIOR WALLS, REFER TO TYPICAL DETAILS TYPICAL(U/N)
LEVEL P3
EXCAVATION SHORING BY SHORING CONTRACTOR (TYPICAL)
20M DOWELS TO MATCH VERT.
LEVEL P4
3-20M CONT.

SF07
S4-02
SECTION
1 : 20

Contractor Must Check And Verify All Dimensions On The Job.

Do Not Scale The Drawings.

All Drawings, Specifications And Related Documents Are The Copyright Of The Architect And Must Be Returned Upon Request.

Reproduction Of Drawings, Specifications And Related Documents In Part Or Whole Is Forbidden Without The Architects Written Permission.

This Drawing Is Not To Be Used For Construction Until Signed ByThe Architect.

Date:

DEC.18,2015 DEC.18,2015

stephenson ENGINEERING
2550 Victoria Park Ave. Suite 602
Toronto ON M2J 5A9 | Tel: (416) 635 9970
www.stephenson-eng.com | info@stephenson-eng.com

No	Revision	Date

No	Issued For	Date
7	ISSUED FOR STEEL TENDER	DEC.18,2015
4	BUILDING PERMIT RESUBMISSION	SEPT.21,2015
3	BUILDING PERMIT RESUBMISSION	JULY 22,2015
2	BUILDING PERMIT SUBMISSION	JUNE 12,2015
1	ISSUED FOR WT REVIEW	MAY 01,2015

AQUAVISTA
AT BAYSIDE TORONTO

Drawing Title
FOUNDATION SECTIONS

Project
Hines TRIDEL®
AQUAVISTA
Block 3 - R3 & R4
Merchant's Whart
Toronto, ON

Scale
As indicated
Drawn by
DC
Checked by
IA/BBS
Project No.
20140031
Date
DEC.18,2015
Drawing No.
S4-02

Plot Date: 3/9/2016 10:02:49 AM

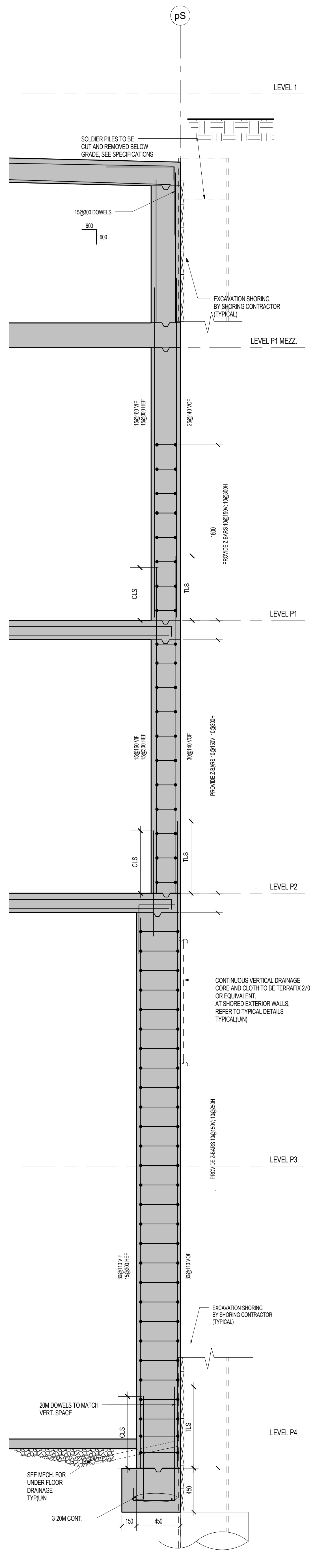
pS
LEVEL 1
SOLDIER PILES TO BE CUT AND REMOVED BELOW GRADE, SEE SPECIFICATIONS
15@300 DOWELS
600
600
EXCAVATION SHORING BY SHORING CONTRACTOR (TYPICAL)
LEVEL P1 MEZZ.
15@160 VIF
15@300 HEF
25@140 VOF
1800
PROVIDE Z-BARS 10@150V; 10@300H
CLS
TLS
LEVEL P1
15@160 VIF
15@300 HEF
30@140 VOF
PROVIDE Z-BARS 10@150V; 10@300H
CLS
TLS
LEVEL P2
CONTINUOUS VERTICAL DRAINAGE CORE AND CLOTH TO BE TERRAFIX 270 OR EQUIVALENT, AT SHORED EXTERIOR WALLS, REFER TO TYPICAL DETAILS TYPICAL(U/N)
PROVIDE Z-BARS 10@150V; 10@250H
LEVEL P3
30@110 VIF
15@200 HEF
30@110 VOF
EXCAVATION SHORING BY SHORING CONTRACTOR (TYPICAL)
20M DOWELS TO MATCH VERT. SPACE
CLS
TLS
LEVEL P4
SEE MECH. FOR UNDER FLOOR DRAINAGE TYP)U/N
450
3-20M CONT.
150
450

SF08
S4-03
SECTION
1 : 20

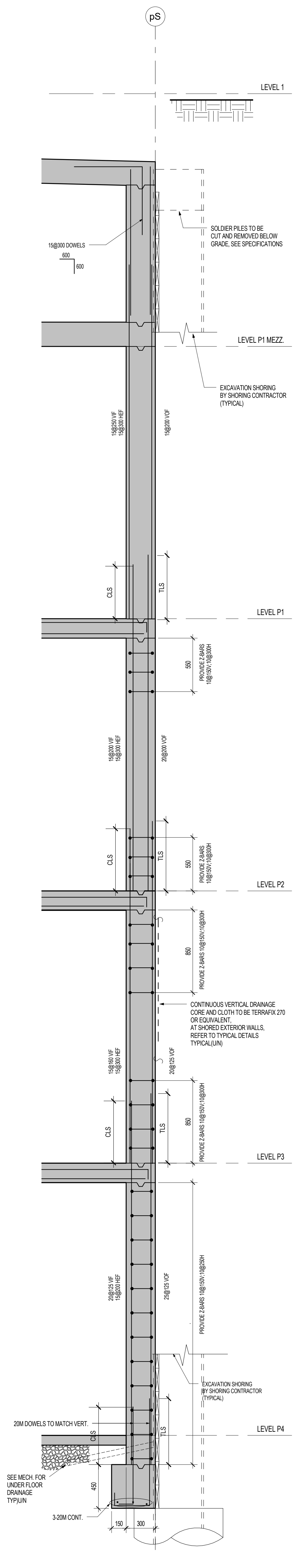
pS
LEVEL 1
SOLDIER PILES TO BE CUT AND REMOVED BELOW GRADE, SEE SPECIFICATIONS
15@300 DOWELS
600
600
LEVEL P1 MEZZ.
EXCAVATION SHORING BY SHORING CONTRACTOR (TYPICAL)
15@250 VIF
15@300 HEF
15@200 VOF
CLS
TLS
LEVEL P1
CLS
TLS
LEVEL P2
CONTINUOUS VERTICAL DRAINAGE CORE AND CLOTH TO BE TERRAFIX 270 OR EQUIVALENT, AT SHORED EXTERIOR WALLS, REFER TO TYPICAL DETAILS TYPICAL(U/N)
CLS
TLS
LEVEL P3
20@125 VIF
15@200 HEF
25@125 VOF
PROVIDE Z-BARS 10@150V;10@250H
EXCAVATION SHORING BY SHORING CONTRACTOR (TYPICAL)
20M DOWELS TO MATCH VERT.
CLS
TLS
LEVEL P4
SEE MECH. FOR UNDER FLOOR DRAINAGE TYP)U/N
450
3-20M CONT.
150
300

SF09
S4-03
SECTION
1 : 20

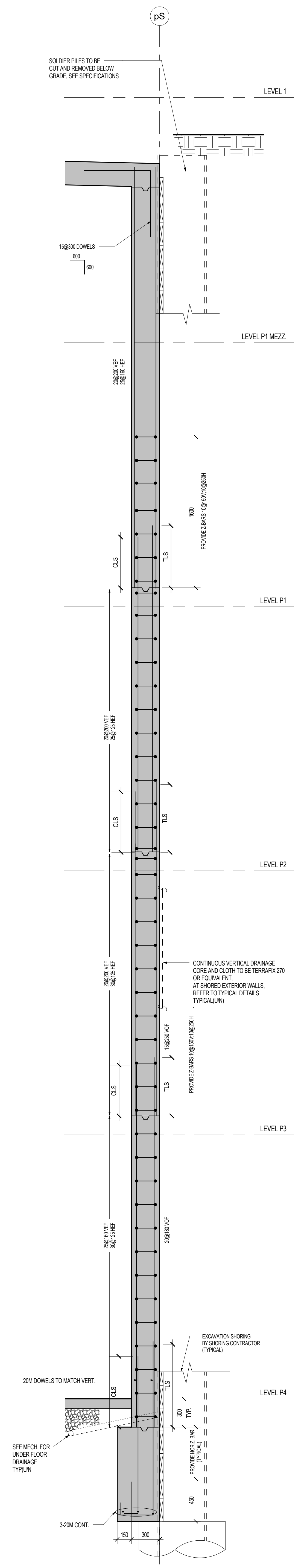
pS
SOLDIER PILES TO BE CUT AND REMOVED BELOW GRADE, SEE SPECIFICATIONS
LEVEL 1
15@300 DOWELS
600
600
LEVEL P1 MEZZ.
20@200 VEF
25@160 HEF
PROVIDE Z-BARS 10@150V;10@250H
CLS
TLS
LEVEL P1
CLS
TLS
LEVEL P2
CONTINUOUS VERTICAL DRAINAGE CORE AND CLOTH TO BE TERRAFIX 270 OR EQUIVALENT, AT SHORED EXTERIOR WALLS, REFER TO TYPICAL DETAILS TYPICAL(U/N)
CLS
LEVEL P3
EXCAVATION SHORING BY SHORING CONTRACTOR (TYPICAL)
20M DOWELS TO MATCH VERT.
CLS
TLS
LEVEL P4
300
TYP.
SEE MECH. FOR UNDER FLOOR DRAINAGE TYP)U/N
PROVIDE HORIZ. BAR (TYPICAL)
450
3-20M CONT.
150
300

SF10
S4-03
SECTION
1 : 20

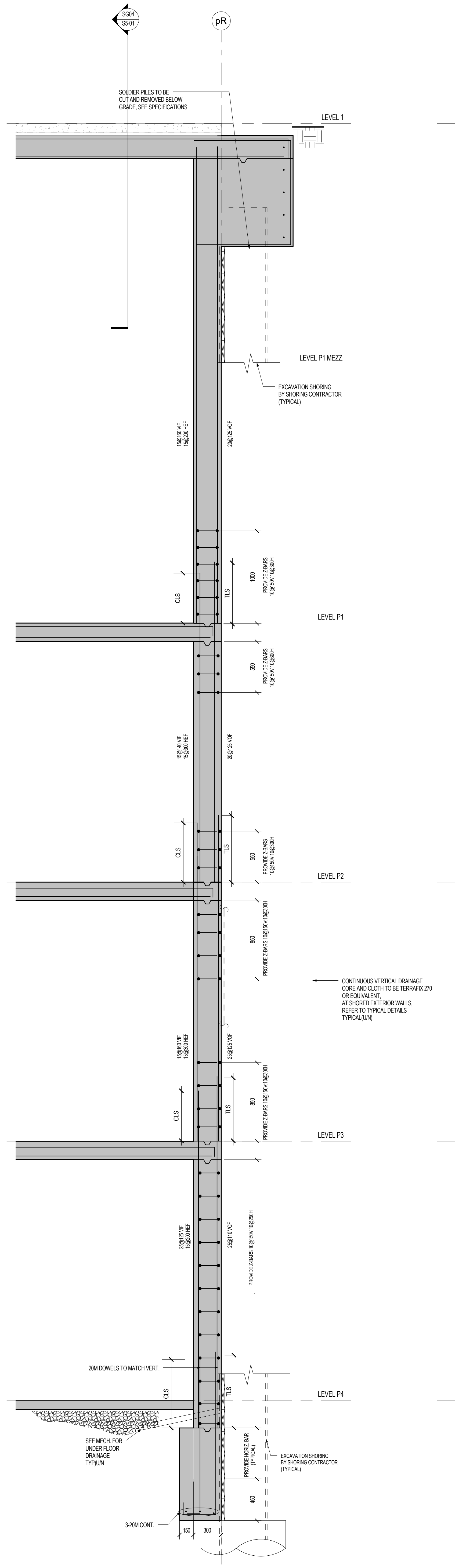
SG04
S5-01
pR
SOLDIER PILES TO BE CUT AND REMOVED BELOW GRADE, SEE SPECIFICATIONS
LEVEL 1
LEVEL P1 MEZZ.
EXCAVATION SHORING BY SHORING CONTRACTOR (TYPICAL)
15@160 VIF
15@200 HEF
20@125 VOF
CLS
TLS
LEVEL P1
CLS
TLS
LEVEL P2
CONTINUOUS VERTICAL DRAINAGE CORE AND CLOTH TO BE TERRAFIX 270 OR EQUIVALENT, AT SHORED EXTERIOR WALLS, REFER TO TYPICAL DETAILS TYPICAL(U/N)
CLS
LEVEL P3
20M DOWELS TO MATCH VERT.
CLS
TLS
LEVEL P4
SEE MECH. FOR UNDER FLOOR DRAINAGE TYP)U/N
PROVIDE HORIZ. BAR (TYPICAL)
EXCAVATION SHORING BY SHORING CONTRACTOR (TYPICAL)
450
3-20M CONT.
150
300

SF11
S4-03
SECTION
1 : 20

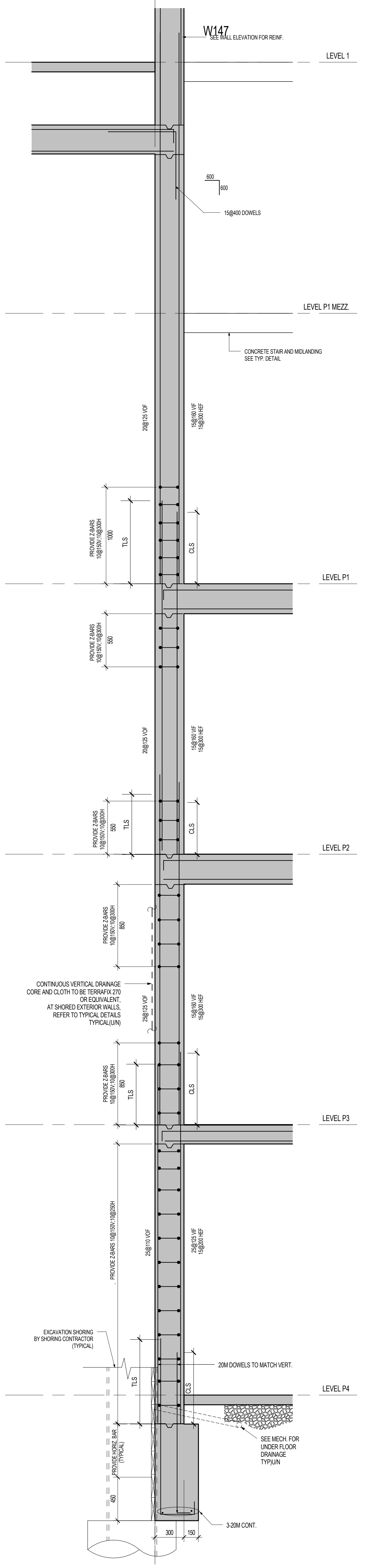
p17
W147
SEE WALL ELEVATION FOR REINF.
LEVEL 1
600
600
15@400 DOWELS
LEVEL P1 MEZZ.
CONCRETE STAIR AND MIDLANDING SEE TYP. DETAIL
20@125 VOF
15@160 VIF
15@300 HEF
TLS
LEVEL P1
TLS
LEVEL P2
CONTINUOUS VERTICAL DRAINAGE CORE AND CLOTH TO BE TERRAFIX 270 OR EQUIVALENT, AT SHORED EXTERIOR WALLS, REFER TO TYPICAL DETAILS TYPICAL(U/N)
TLS
LEVEL P3
25@110 VOF
25@125 VIF
15@200 HEF
EXCAVATION SHORING BY SHORING CONTRACTOR (TYPICAL)
20M DOWELS TO MATCH VERT.
TLS
CLS
LEVEL P4
SEE MECH. FOR UNDER FLOOR DRAINAGE TYP)U/N
PROVIDE HORIZ. BAR (TYPICAL)
450
3-20M CONT.
300
150

SF12
S4-03
SECTION
1 : 20

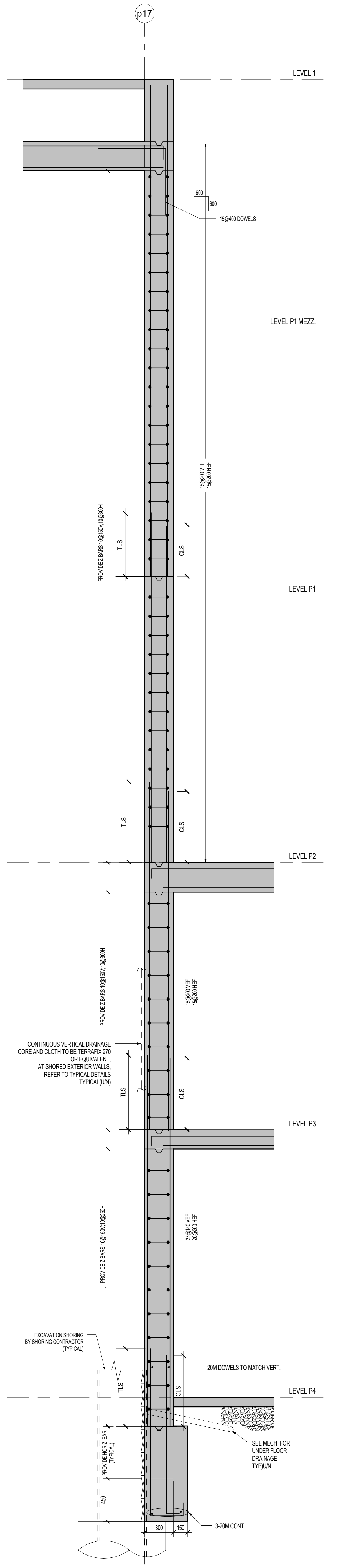
p17
LEVEL 1
600
600
15@400 DOWELS
LEVEL P1 MEZZ.
TLS
CLS
LEVEL P1
TLS
CLS
LEVEL P2
CONTINUOUS VERTICAL DRAINAGE CORE AND CLOTH TO BE TERRAFIX 270 OR EQUIVALENT, AT SHORED EXTERIOR WALLS, REFER TO TYPICAL DETAILS TYPICAL(U/N)
TLS
CLS
LEVEL P3
EXCAVATION SHORING BY SHORING CONTRACTOR (TYPICAL)
20M DOWELS TO MATCH VERT.
TLS
CLS
LEVEL P4
PROVIDE HORIZ. BAR (TYPICAL)
SEE MECH. FOR UNDER FLOOR DRAINAGE TYP)U/N
450
3-20M CONT.
300
150

SF13
S4-03
SECTION
1 : 20

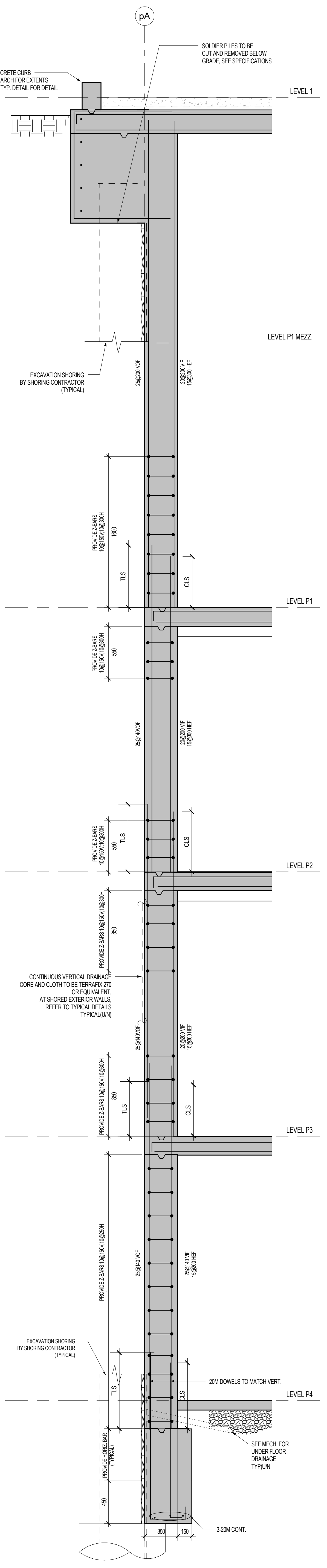
pA
SOLDIER PILES TO BE CUT AND REMOVED BELOW GRADE, SEE SPECIFICATIONS
CONCRETE CURB SEE ARCH FOR EXTENTS SEE TYP. DETAIL FOR DETAIL
LEVEL 1
LEVEL P1 MEZZ.
EXCAVATION SHORING BY SHORING CONTRACTOR (TYPICAL)
25@200 VOF
20@200 VIF
15@300 HEF
TLS
CLS
LEVEL P1
TLS
CLS
LEVEL P2
CONTINUOUS VERTICAL DRAINAGE CORE AND CLOTH TO BE TERRAFIX 270 OR EQUIVALENT, AT SHORED EXTERIOR WALLS, REFER TO TYPICAL DETAILS TYPICAL(U/N)
TLS
CLS
LEVEL P3
25@140 VOF
25@140 VIF
15@200 HEF
EXCAVATION SHORING BY SHORING CONTRACTOR (TYPICAL)
20M DOWELS TO MATCH VERT.
TLS
CLS
LEVEL P4
PROVIDE HORIZ. BAR (TYPICAL)
SEE MECH. FOR UNDER FLOOR DRAINAGE TYP)U/N
450
3-20M CONT.
350
150

SF14
S4-03
SECTION
1 : 20

1. REFER TO TYPICAL DETAILS T-C56A AND TC56B FOR TLS (TENSION LAP SPLICE) AND CLS (COMPRESSION LAP SPLICE) LENGTHS.
2. OVERALL LENGTH OF REINFORCEMENT SHOULD ACCOUNT FOR VARIATIONS IN TOP OF FOOTING ELEVATION WHILE STILL MEETING THE MINIMUM LAP SPLICES INDICATED. VARIATIONS IN FOOTING ELEVATION DURING CONSTRUCTION WILL REQUIRE MODIFICATION TO REINFORCEMENT TO ACCOMMODATE ACCORDINGLY.

Contractor Must Check And Verify All Dimensions On The Job.

Do Not Scale The Drawings.

All Drawings, Specifications And Related Documents Are The Copyright Of The Architect And Must Be Returned Upon Request.

Reproduction Of Drawings, Specifications And Related Documents In Part Or Whole Is Forbidden Without The Architects Written Permission.

This Drawing Is Not To Be Used For Construction Until Signed ByThe Architect.

Date:

DEC.18,2015 DEC.18,2015

stephenson ENGINEERING
2550 Victoria Park Ave. Suite 602
Toronto ON M2J 5A9 | Tel: (416) 635 9970
www.stephenson-eng.com | info@stephenson-eng.com

No	Revision	Date

No	Issued For	Date
7	ISSUED FOR STEEL TENDER	DEC.18,2015
4	BUILDING PERMIT RESUBMISSION	SEPT.21,2015
3	BUILDING PERMIT RESUBMISSION	JULY 22,2015
2	BUILDING PERMIT SUBMISSION	JUNE 12,2015
1	ISSUED FOR WT REVIEW	MAY 01,2015

AQUAVISTA
AT BAYSIDE TORONTO

Drawing Title
FOUNDATION SECTIONS

Project
Hines TRIDEL®
AQUAVISTA
Block 3 - R3 & R4
Merchant's Whart
Toronto, ON

Scale
As indicated
Drawn by
DC
Checked by
IA/BBS
Project No.
20140031
Date
DEC.18,2015
Drawing No.
S4-03

Plot Date: 3/9/2016 10:02:53 AM

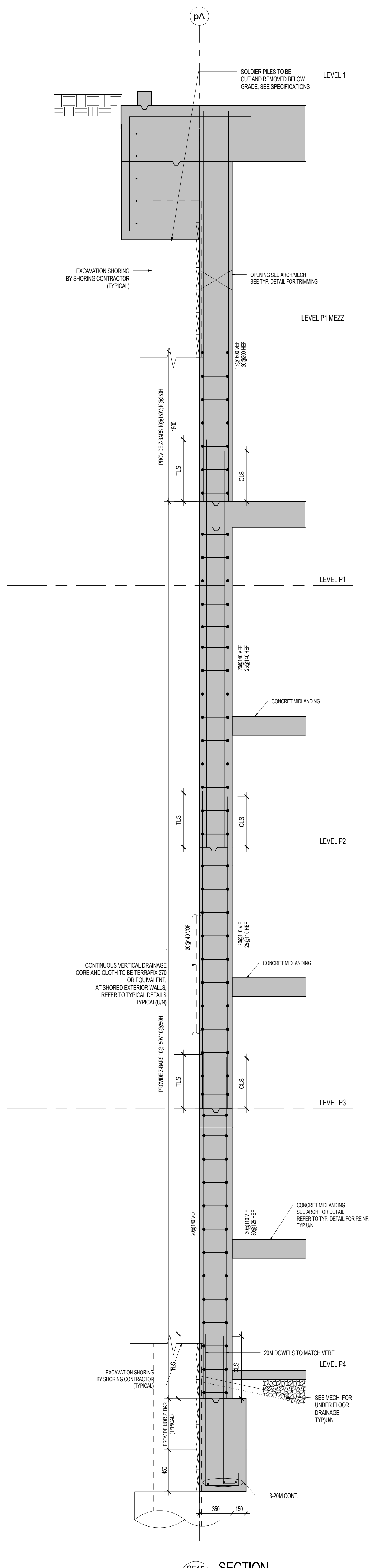
pA
SOLDIER PILES TO BE CUT AND REMOVED BELOW GRADE, SEE SPECIFICATIONS
LEVEL 1
EXCAVATION SHORING BY SHORING CONTRACTOR (TYPICAL)
OPENING SEE ARCH/MECH SEE TYP. DETAIL FOR TRIMMING
LEVEL P1 MEZZ.
15@1600 VEF 20@200 HEF
PROVIDE Z-BARS 10@150V;10@250H
1600
TLS
CLS
LEVEL P1
20@140 VEF 25@140 HEF
CONCRET MIDLANDING
LEVEL P2
20@140 VOF
20@110 VIF 25@110 HEF
CONTINUOUS VERTICAL DRAINAGE CORE AND CLOTH TO BE TERRAFIX 270 OR EQUIVALENT, AT SHORED EXTERIOR WALLS, REFER TO TYPICAL DETAILS TYPICAL(U/N)
LEVEL P3
CONCRET MIDLANDING SEE ARCH FOR DETAIL REFER TO TYP. DETAIL FOR REINF. TYP U/N
30@110 VIF 30@125 HEF
20M DOWELS TO MATCH VERT.
LEVEL P4
SEE MECH. FOR UNDER FLOOR DRAINAGE TYP)U/N
PROVIDE HORIZ. BAR (TYPICAL)
450
3-20M CONT.
350
150

SF15 SECTION
S4-04 1 : 20

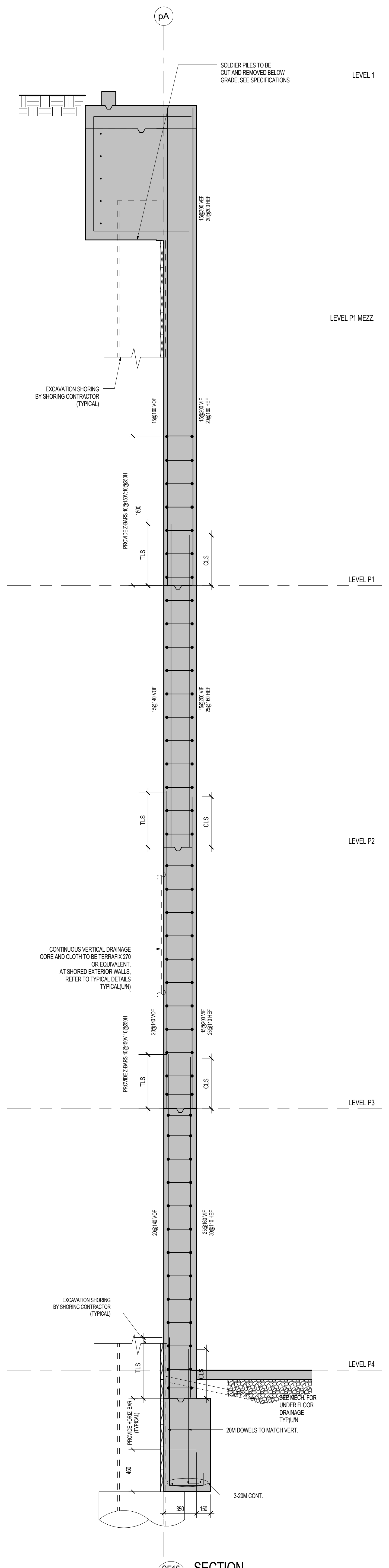
pA
SOLDIER PILES TO BE CUT AND REMOVED BELOW GRADE, SEE SPECIFICATIONS
LEVEL 1
LEVEL P1 MEZZ.
EXCAVATION SHORING BY SHORING CONTRACTOR (TYPICAL)
15@160 VOF
15@200 VIF 20@160 HEF
PROVIDE Z-BARS 10@150V;10@250H
1600
TLS
CLS
LEVEL P1
15@140 VOF
15@200 VIF 25@160 HEF
LEVEL P2
CONTINUOUS VERTICAL DRAINAGE CORE AND CLOTH TO BE TERRAFIX 270 OR EQUIVALENT, AT SHORED EXTERIOR WALLS, REFER TO TYPICAL DETAILS TYPICAL(U/N)
20@140 VOF
15@200 VIF 25@110 HEF
LEVEL P3
20@140 VOF
25@160 VIF 30@110 HEF
EXCAVATION SHORING BY SHORING CONTRACTOR (TYPICAL)
LEVEL P4
SEE MECH. FOR UNDER FLOOR DRAINAGE TYP)U/N
PROVIDE HORIZ. BAR (TYPICAL)
20M DOWELS TO MATCH VERT.
450
3-20M CONT.
350
150

SF16 SECTION
S4-04 1 : 20

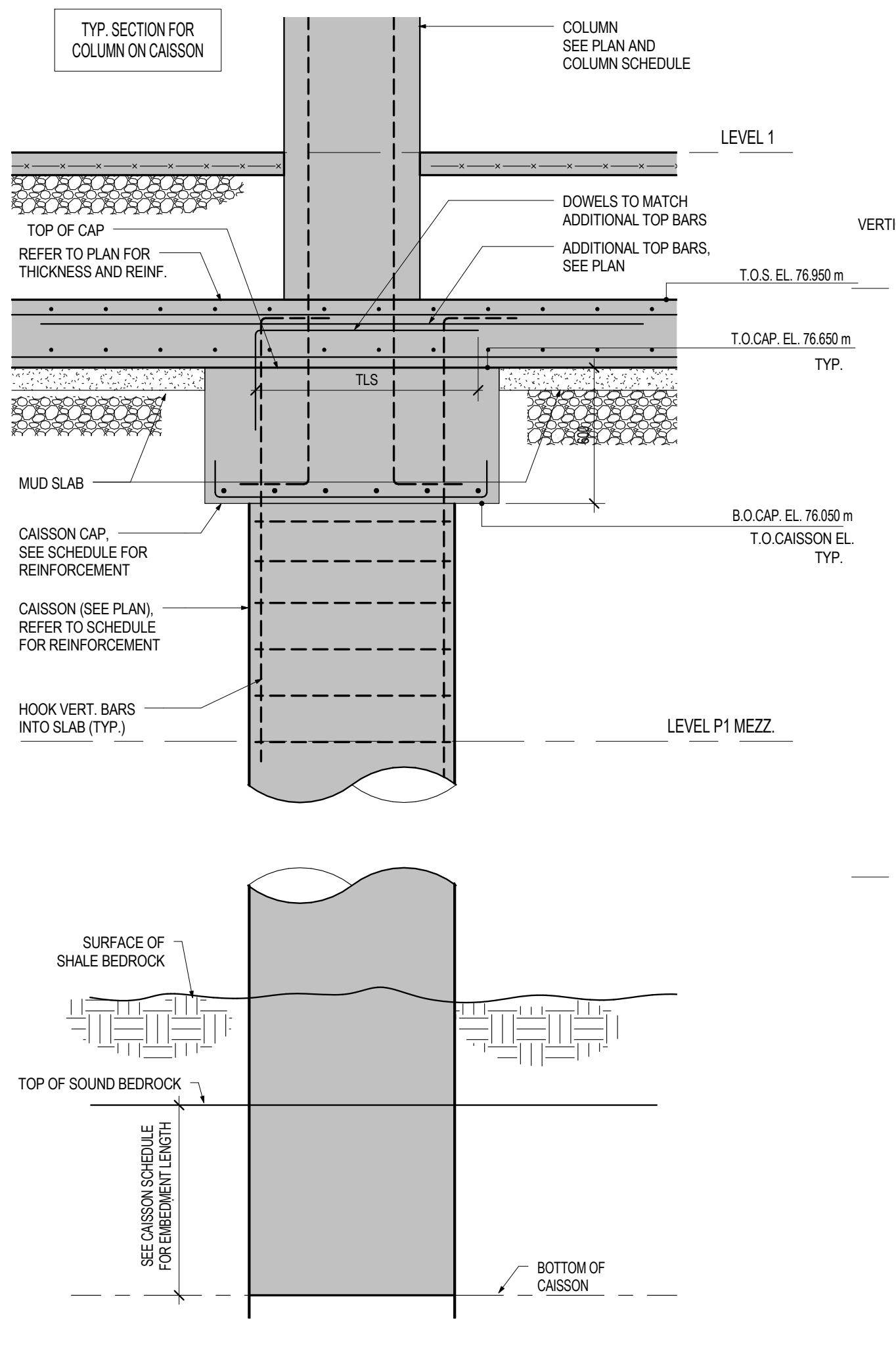
TYP. SECTION FOR COLUMN ON CAISSON
COLUMN SEE PLAN AND COLUMN SCHEDULE
LEVEL 1
DOWELS TO MATCH ADDITIONAL TOP BARS
ADDITIONAL TOP BARS, SEE PLAN
TOP OF CAP
REFER TO PLAN FOR THICKNESS AND REINF.
T.O.S. EL. 76.950 m
T.O.CAP. EL. 76.650 m
TYP.
TLS
600
MUD SLAB
B.O.CAP. EL. 76.050 m
T.O.CAISSON EL.
TYP.
CAISSON CAP, SEE SCHEDULE FOR REINFORCEMENT
CAISSON (SEE PLAN), REFER TO SCHEDULE FOR REINFORCEMENT
HOOK VERT. BARS INTO SLAB (TYP.)
LEVEL P1 MEZZ.
SURFACE OF SHALE BEDROCK
TOP OF SOUND BEDROCK
SEE CAISSON SCHEDULE FOR EMBEDMENT LENGTH
BOTTOM OF CAISSON

SF17 SECTION
S4-04 1 : 20

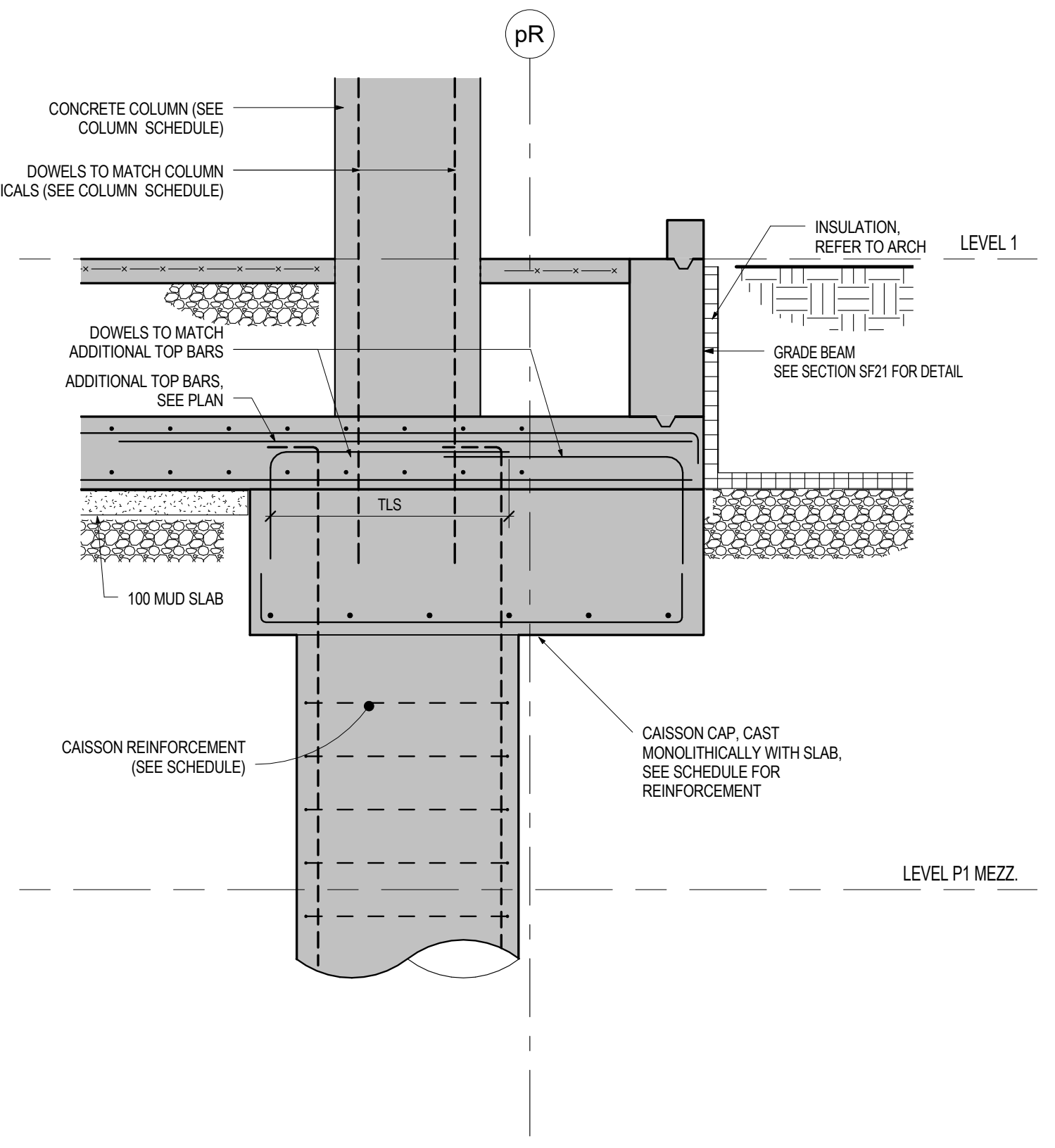
pR
CONCRETE COLUMN (SEE COLUMN SCHEDULE)
DOWELS TO MATCH COLUMN VERTICALS (SEE COLUMN SCHEDULE)
INSULATION, REFER TO ARCH
LEVEL 1
DOWELS TO MATCH ADDITIONAL TOP BARS
ADDITIONAL TOP BARS, SEE PLAN
GRADE BEAM SEE SECTION SF21 FOR DETAIL
TLS
100 MUD SLAB
CAISSON REINFORCEMENT (SEE SCHEDULE)
CAISSON CAP, CAST MONOLITHICALLY WITH SLAB, SEE SCHEDULE FOR REINFORCEMENT
LEVEL P1 MEZZ.

SF18 SECTION
S4-04 1 : 20

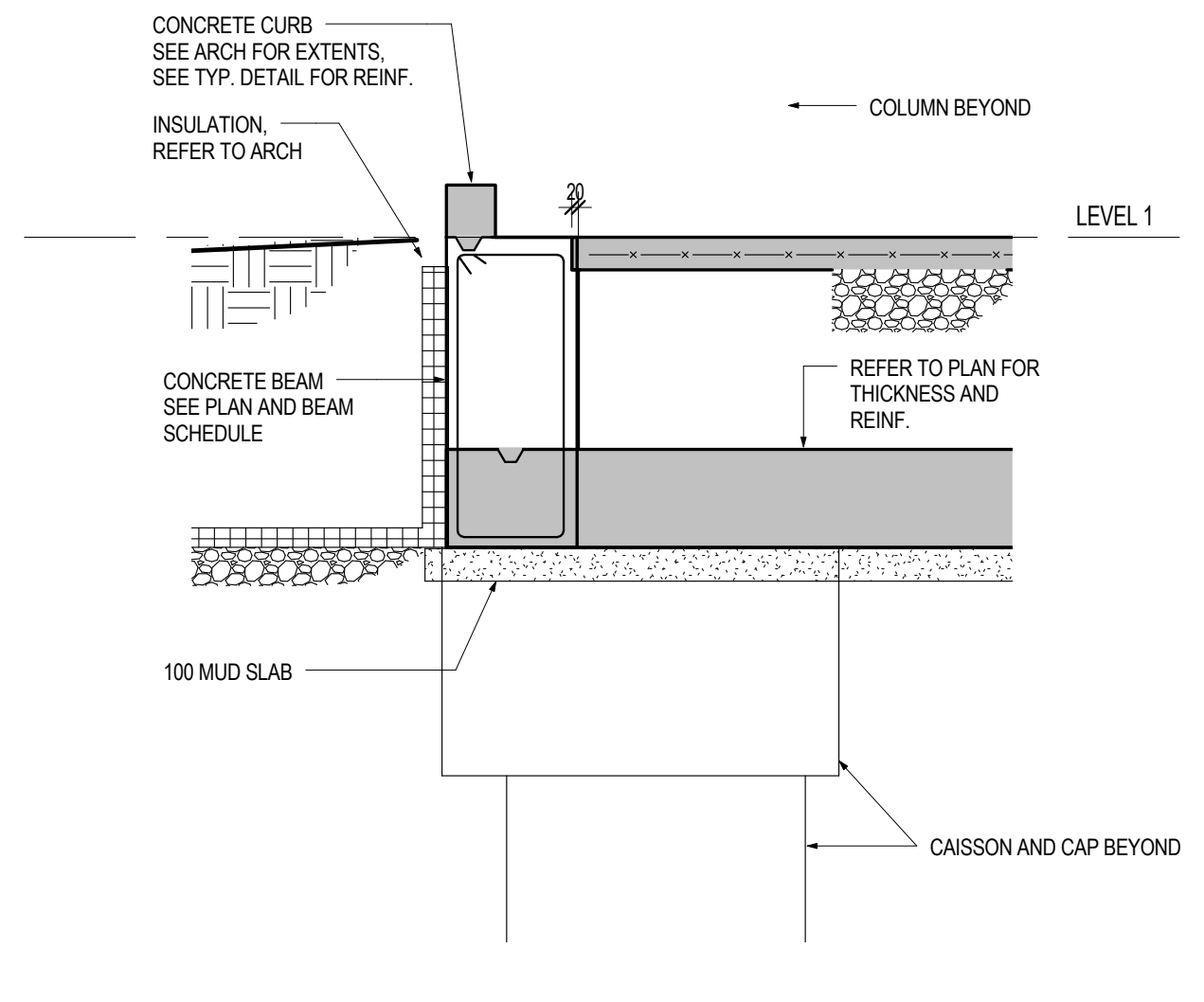
CONCRETE CURB SEE ARCH FOR EXTENTS, SEE TYP. DETAIL FOR REINF.
INSULATION, REFER TO ARCH
COLUMN BEYOND
20
LEVEL 1
CONCRETE BEAM SEE PLAN AND BEAM SCHEDULE
REFER TO PLAN FOR THICKNESS AND REINF.
100 MUD SLAB
CAISSON AND CAP BEYOND

SF19 SECTION
S4-04 1 : 20

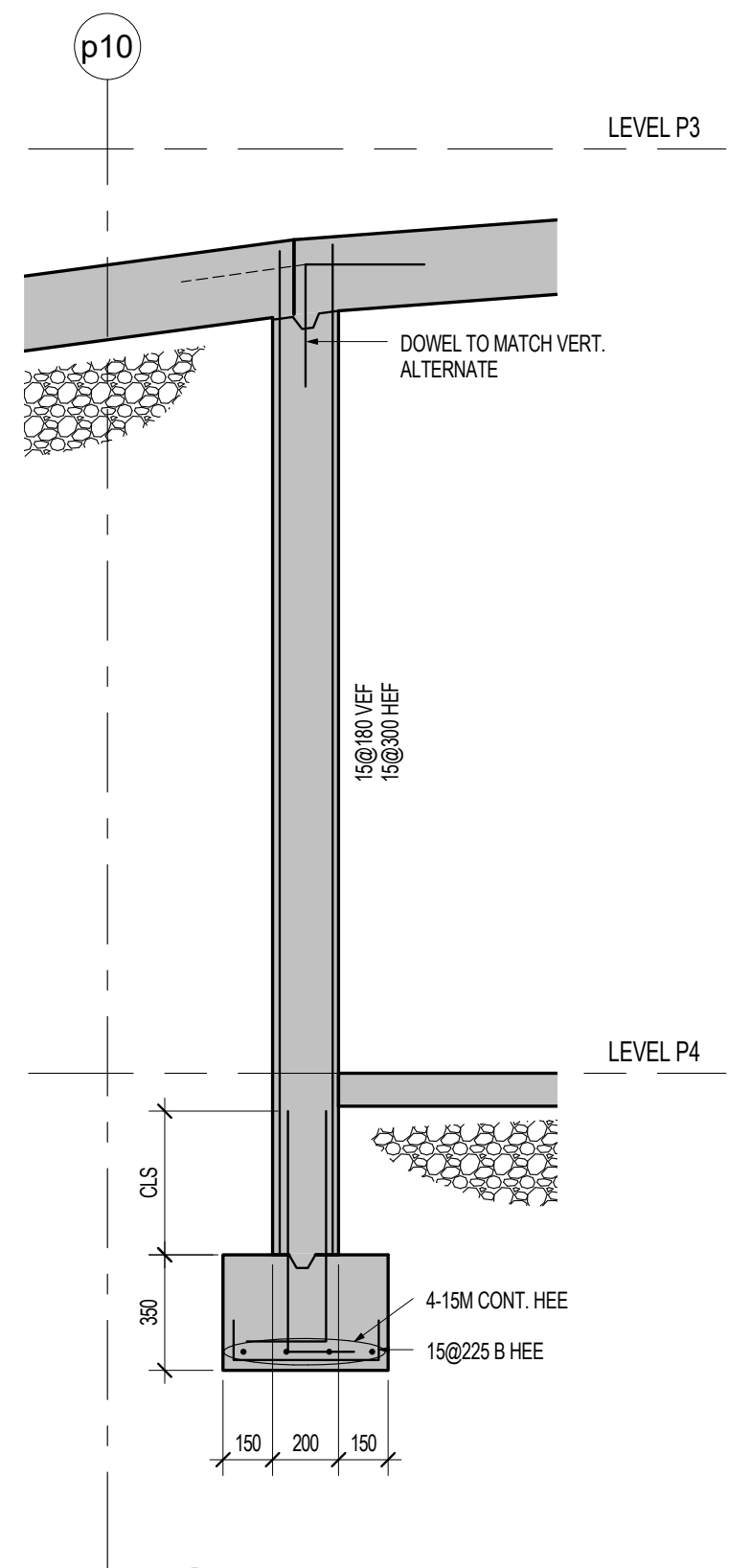
p10
LEVEL P3
DOWEL TO MATCH VERT. ALTERNATE
15@180 VEF 15@300 HEF
LEVEL P4
CLS
350
4-15M CONT. HEE
15@225 B HEE
150
200
150

SF20 SECTION
S4-04 1 : 20

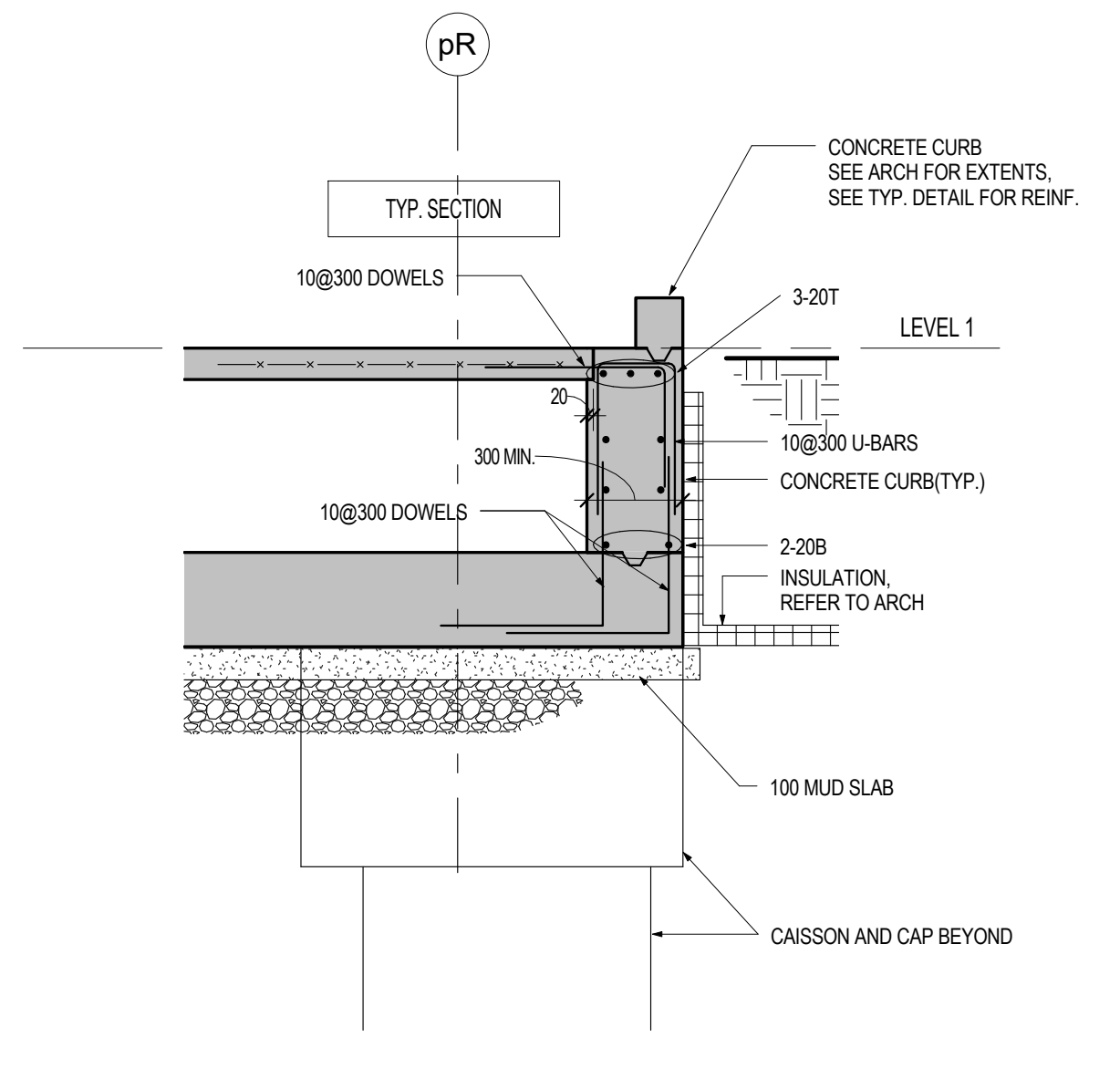
pR
TYP. SECTION
CONCRETE CURB SEE ARCH FOR EXTENTS, SEE TYP. DETAIL FOR REINF.
10@300 DOWELS
3-20T
LEVEL 1
20
300 MIN.
10@300 U-BARS
CONCRETE CURB(TYP.)
10@300 DOWELS
2-20B
INSULATION, REFER TO ARCH
100 MUD SLAB
CAISSON AND CAP BEYOND

SF21 SECTION
S4-04 1 : 20

TYPICAL WALL FOOTING

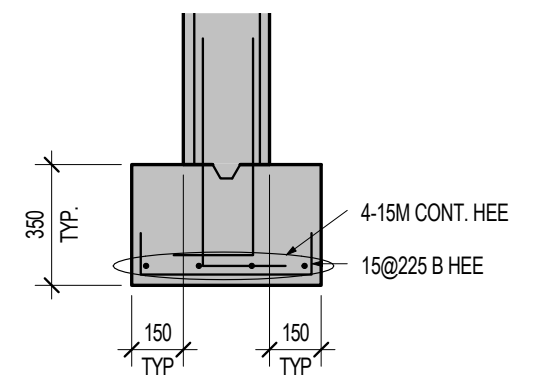
350 TYP.
4-15M CONT. HEE
15@225 B HEE
150 TYP
150 TYP

SF22 SECTION
S4-04 1 : 20

1. REFER TO TYPICAL DETAILS T-C56A AND TC56B FOR TLS (TENSION LAP SPLICE) AND CLS (COMPRESSION LAP SPLICE) LENGTHS.
2. OVERALL LENGTH OF REINFORCEMENT SHOULD ACCOUNT FOR VARIATIONS IN TOP OF FOOTING ELEVATION WHILE STILL MEETING THE MINIMUM LAP SPLICES INDICATED. VARIATIONS IN FOOTING ELEVATION DURING CONSTRUCTION WILL REQUIRE MODIFICATION TO REINFORCEMENT TO ACCOMMODATE ACCORDINGLY.

Contractor Must Check And Verify All Dimensions On The Job.

Do Not Scale The Drawings.

All Drawings, Specifications And Related Documents Are The Copyright Of The Architect And Must Be Returned Upon Request.

Reproduction Of Drawings, Specifications And Related Documents In Part Or Whole Is Forbidden Without The Architects Written Permission.

This Drawing Is Not To Be Used For Construction Until Signed ByThe Architect.

Date:

DEC.18,2015 DEC.18,2015

stephenson
ENGINEERING
2550 Victoria Park Ave. Suite 602
Toronto ON M2J 5A9 | Tel: (416) 635 9970
www.stephenson-eng.com | info@stephenson-eng.com

No	Revision	Date

No	Issued For	Date
7	ISSUED FOR STEEL TENDER	DEC.18,2015
6	ISSUED FOR CAISSONS CONSTRUCTION ONLY	NOV.30,2015
4	BUILDING PERMIT RESUBMISSION	SEPT.21,2015
3	BUILDING PERMIT RESUBMISSION	JULY 22,2015
2	BUILDING PERMIT SUBMISSION	JUNE 12,2015
1	ISSUED FOR WT REVIEW	MAY 01,2015

AQUAVISTA
AT BAYSIDE TORONTO

Drawing Title
FOUNDATION SECTIONS

Project
Hines TRIDEL®
AQUAVISTA
Block 3 - R3 & R4
Merchant's Whart
Toronto, ON

Scale
As indicated
Drawn by
DC
Checked by
IA/BBS
Project No.
20140031
Date
DEC.18,2015
Drawing No.
S4-04

Plot Date: 3/9/2016 10:02:56 AM

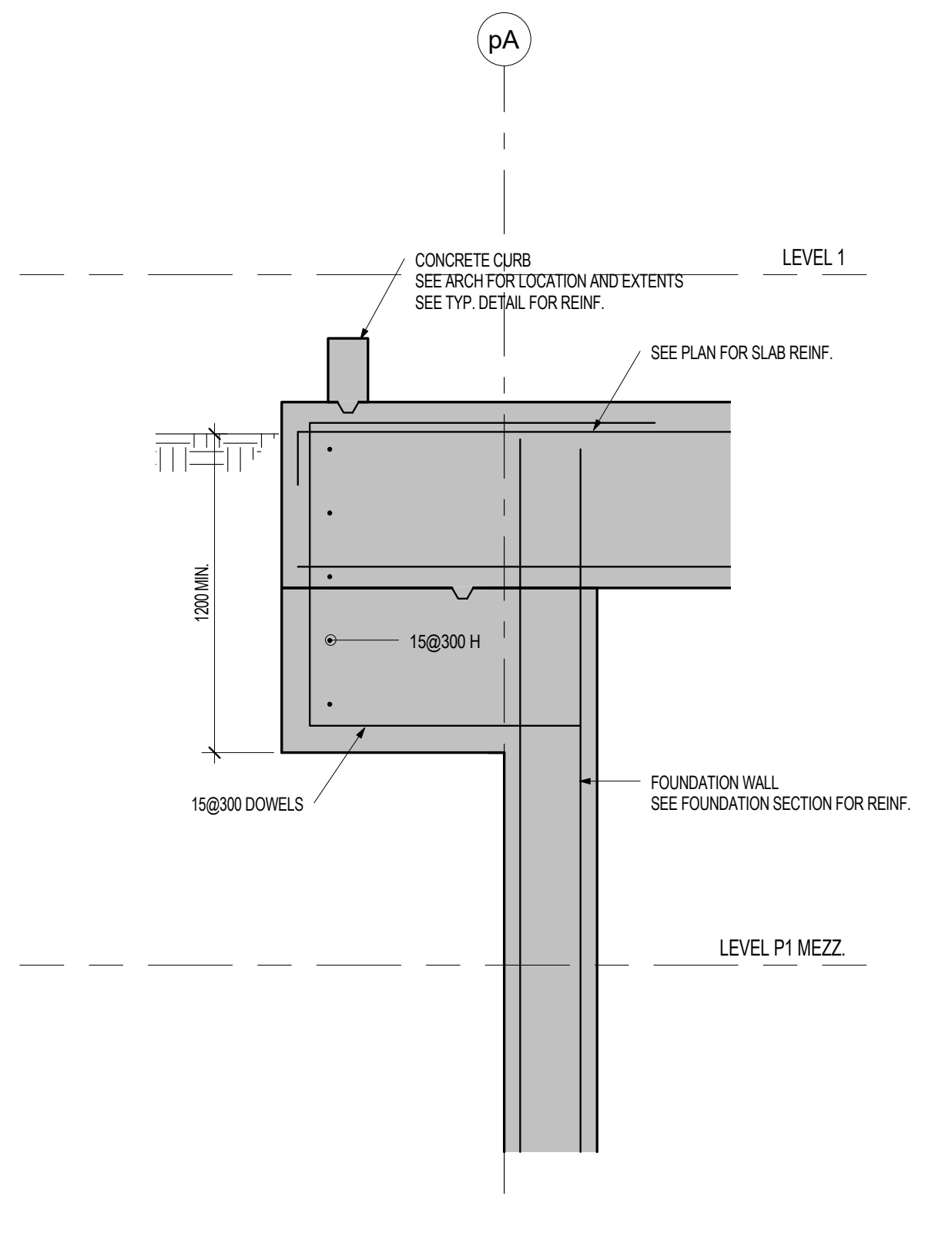
pA
CONCRETE CURB
SEE ARCH FOR LOCATION AND EXTENTS
SEE TYP. DETAIL FOR REINF.
LEVEL 1
SEE PLAN FOR SLAB REINF.
1200 MIN.
15@300 H
15@300 DOWELS
FOUNDATION WALL
SEE FOUNDATION SECTION FOR REINF.
LEVEL P1 MEZZ.

SG01 SECTION
S5-01 1 : 20

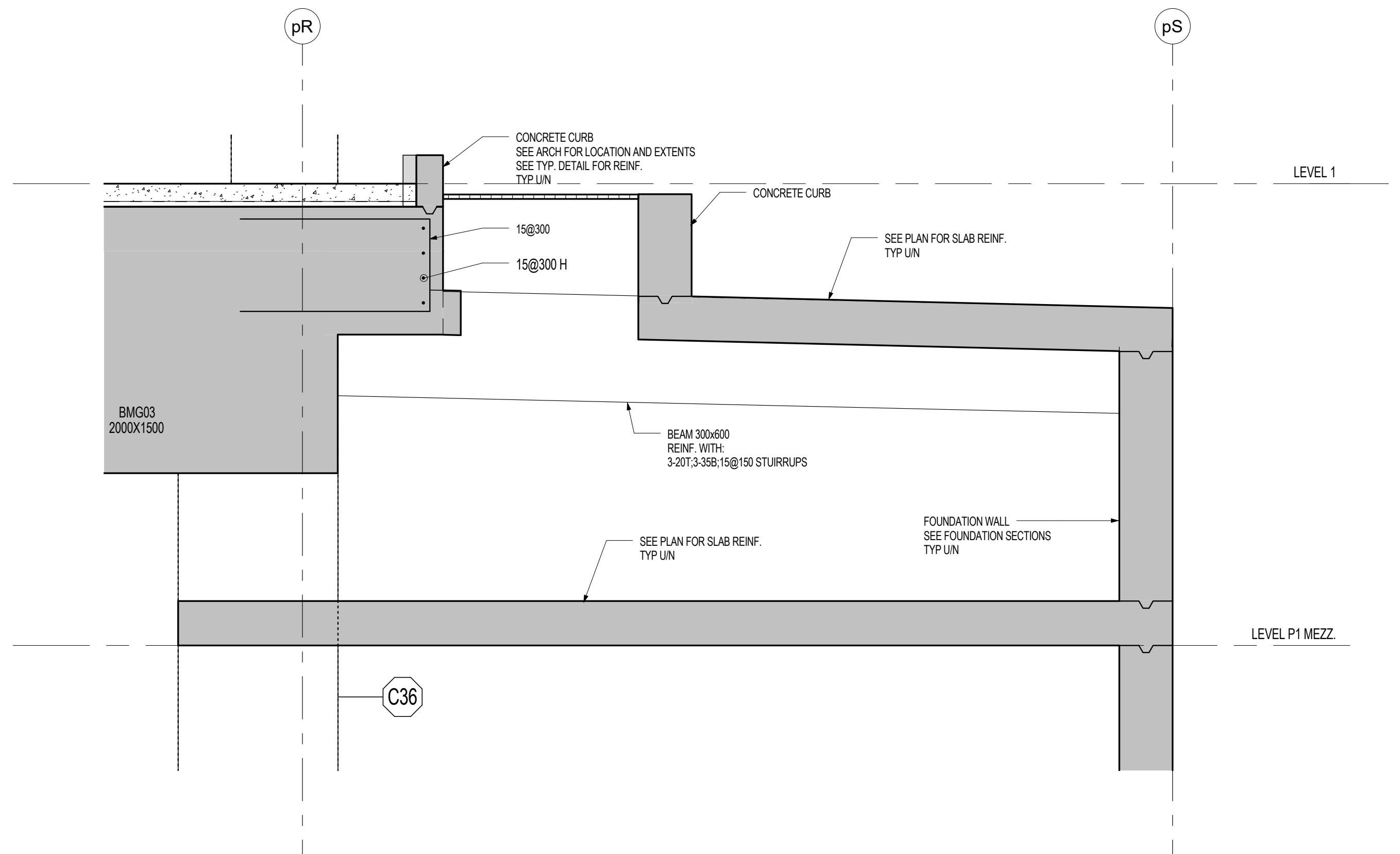
pR
pS
CONCRETE CURB
SEE ARCH FOR LOCATION AND EXTENTS
SEE TYP. DETAIL FOR REINF.
TYP U/N
LEVEL 1
CONCRETE CURB
15@300
15@300 H
SEE PLAN FOR SLAB REINF.
TYP U/N
BMG03
2000X1500
BEAM 300x600
REINF. WITH:
3-20T;3-35B;15@150 STUIRRUPS
FOUNDATION WALL
SEE FOUNDATION SECTIONS
TYP U/N
SEE PLAN FOR SLAB REINF.
TYP U/N
LEVEL P1 MEZZ.
C36

SG02 SECTION
S5-01 1 : 20

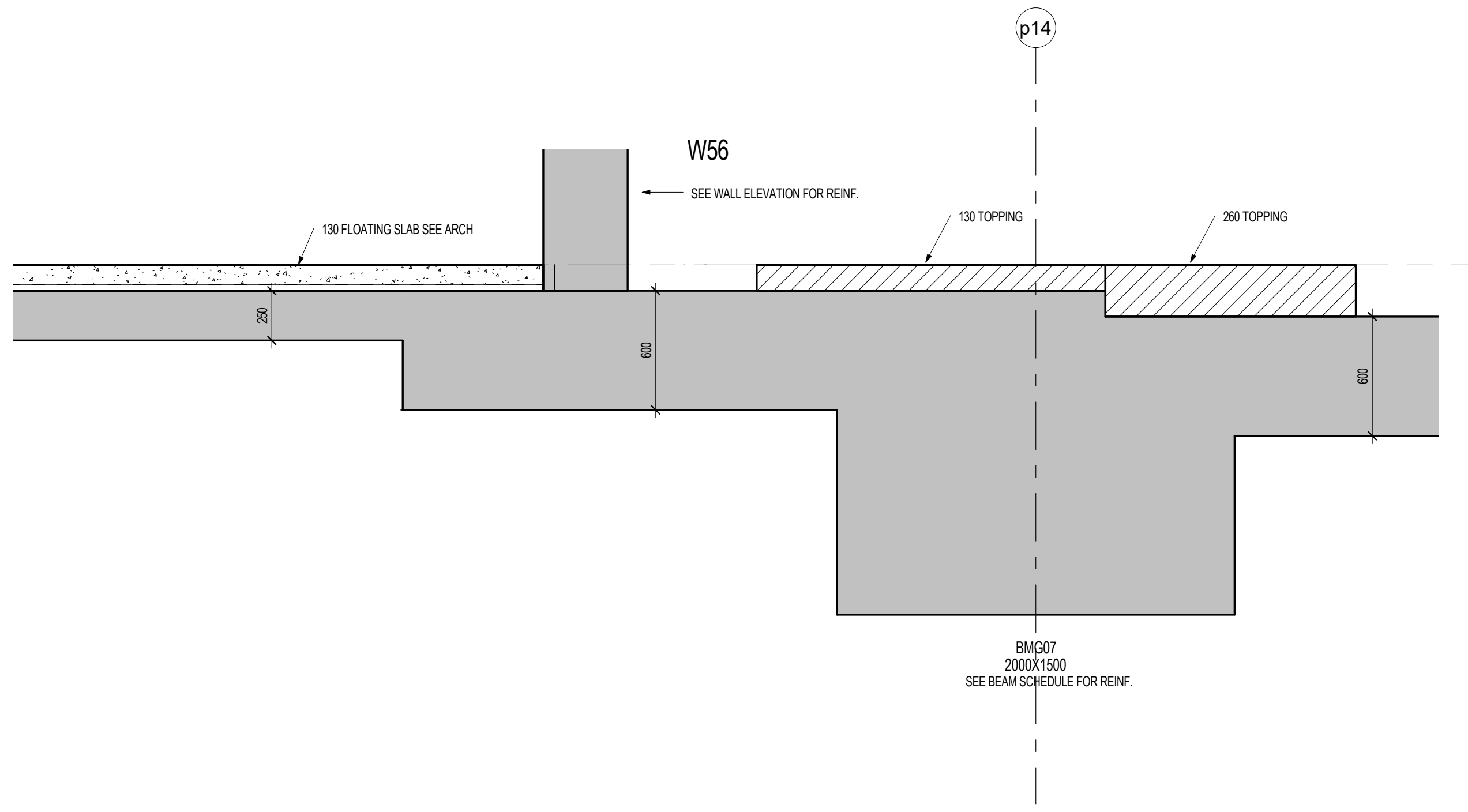
p14
W56
SEE WALL ELEVATION FOR REINF.
130 FLOATING SLAB SEE ARCH
130 TOPPING
260 TOPPING
LEVEL 1
LEVEL 1
250
600
600
BMG07
2000X1500
SEE BEAM SCHEDULE FOR REINF.
LEVEL P1 MEZZ.

SG03 SECTION
S5-01 1 : 20

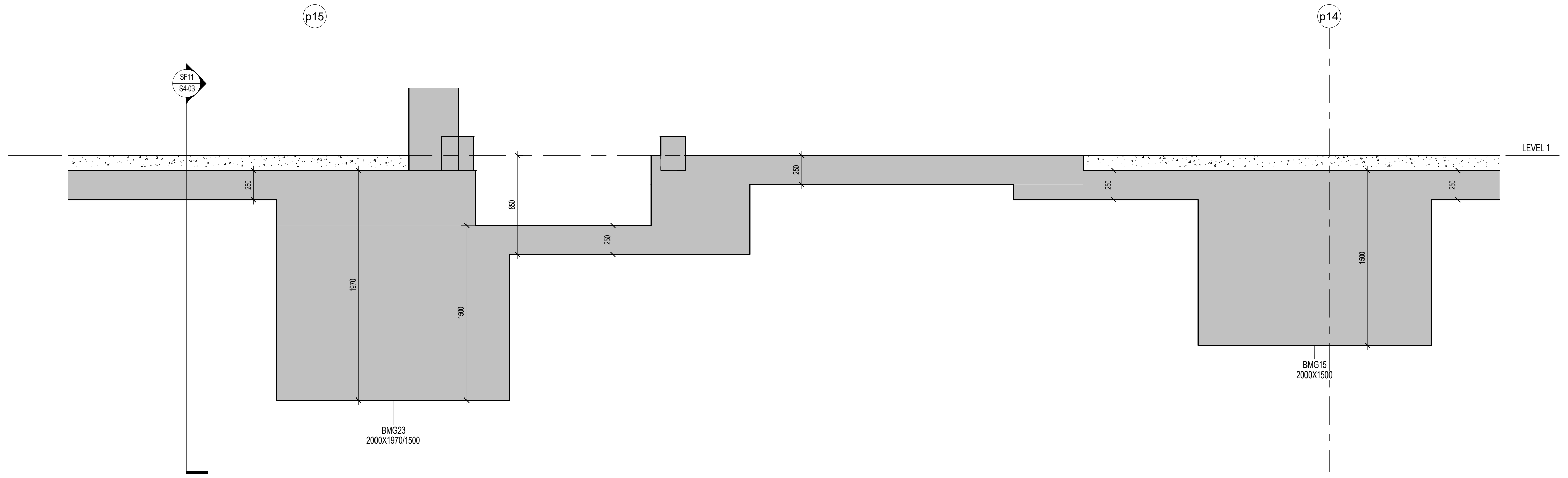
SF11
S4-03
p15
p14
LEVEL 1
250
850
250
250
250
250
1970
1500
1500
BMG23
2000X1970/1500
BMG15
2000X1500

SG04 SECTION
S5-01 1 : 20

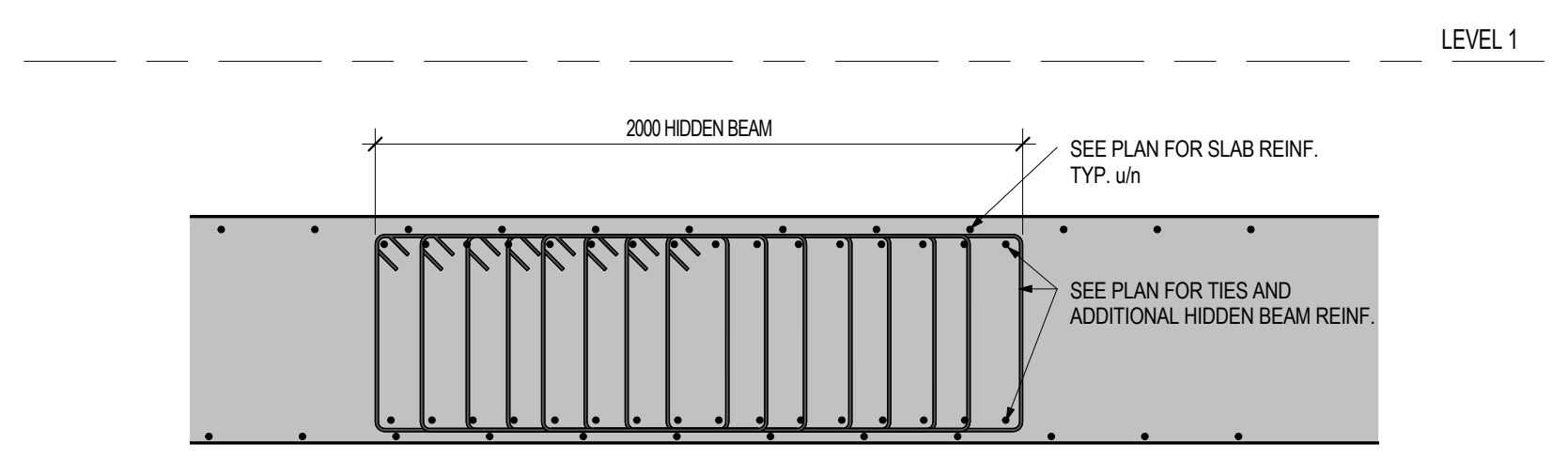
LEVEL 1
2000 HIDDEN BEAM
SEE PLAN FOR SLAB REINF.
TYP. u/n
SEE PLAN FOR TIES AND
ADDITIONAL HIDDEN BEAM REINF.

SG05 SECTION
S5-01 1 : 20

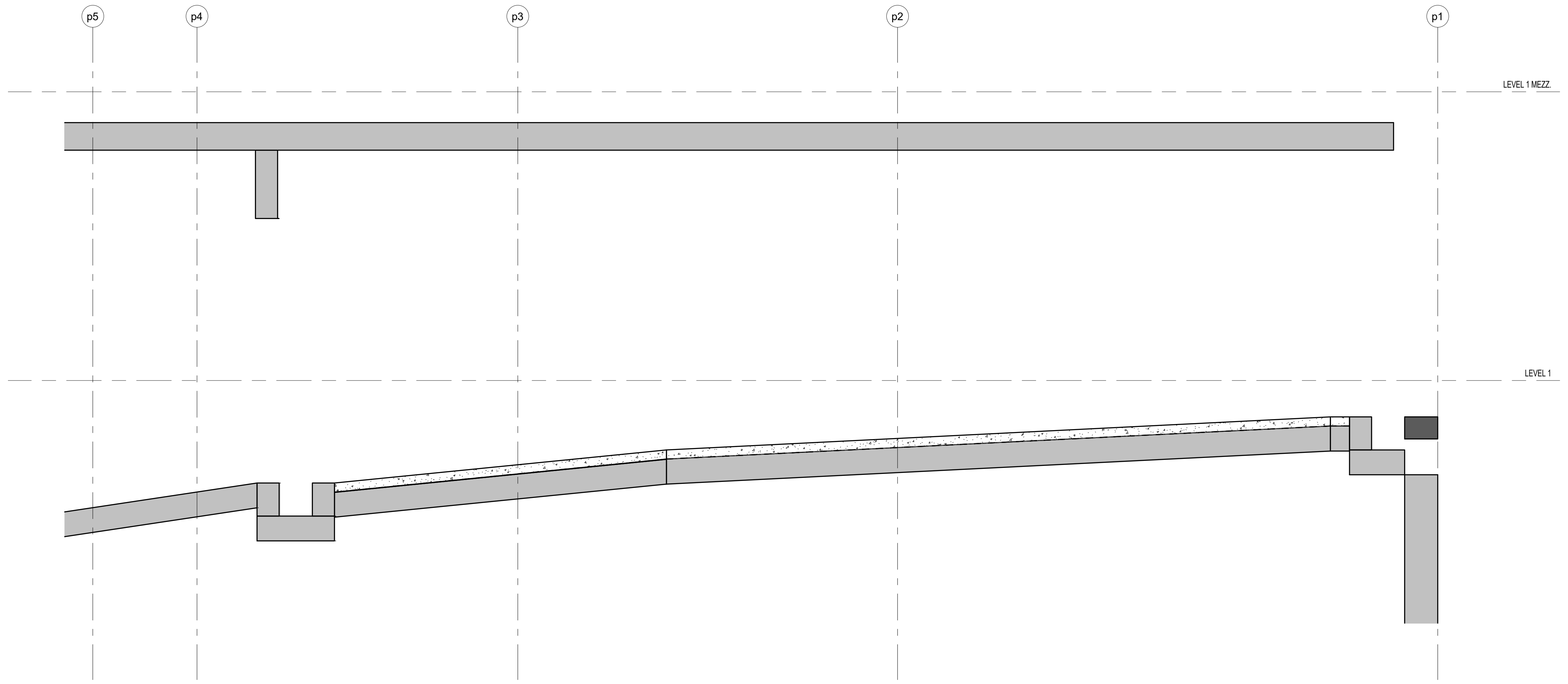
p5
p4
p3
p2
p1
LEVEL 1 MEZZ.
LEVEL 1

SG06 SECTION
S5-01 1 : 20

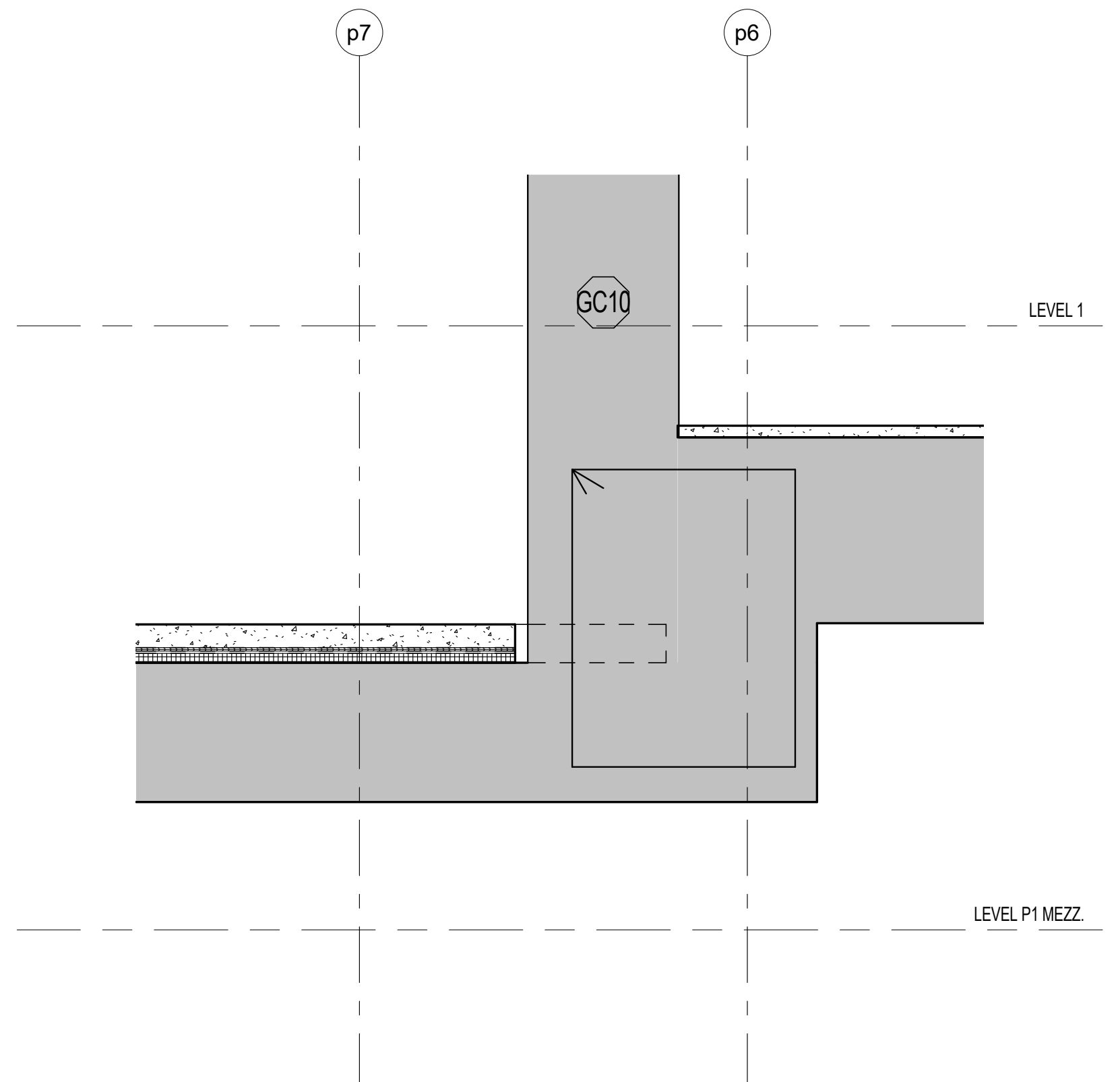
p7
p6
GC10
LEVEL 1
LEVEL P1 MEZZ.

SG07 SECTION
S5-01 1 : 20

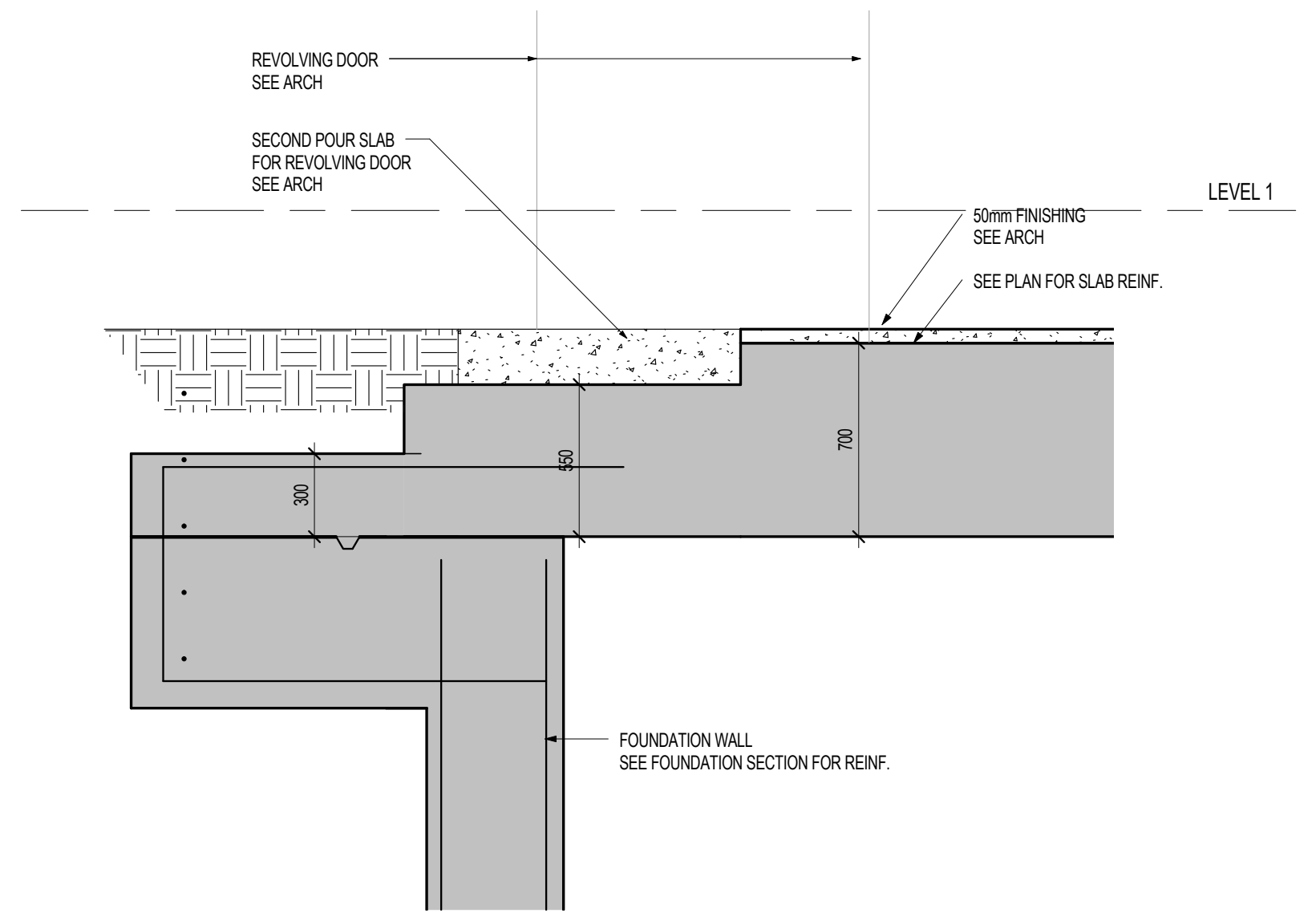
REVOLVING DOOR
SEE ARCH
SECOND POUR SLAB
FOR REVOLVING DOOR
SEE ARCH
LEVEL 1
50mm FINISHING
SEE ARCH
SEE PLAN FOR SLAB REINF.
300
550
700
FOUNDATION WALL
SEE FOUNDATION SECTION FOR REINF.

SG08 SECTION
S5-01 1 : 20

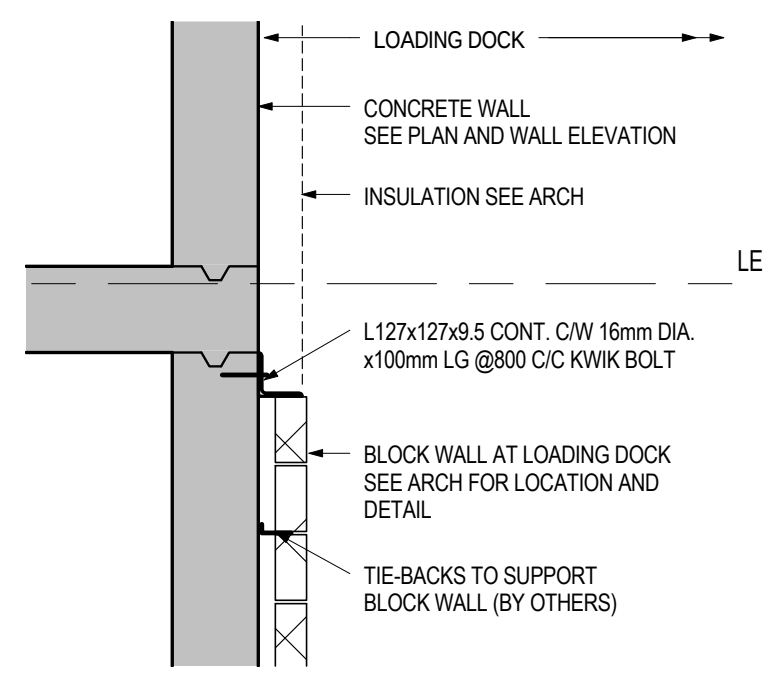
LOADING DOCK
CONCRETE WALL
SEE PLAN AND WALL ELEVATION
INSULATION SEE ARCH
LEVEL 1 MEZZ.
L127x127x9.5 CONT. C/W 16mm DIA.
x100mm LG @800 C/C KWIK BOLT
BLOCK WALL AT LOADING DOCK
SEE ARCH FOR LOCATION AND
DETAIL
TIE-BACKS TO SUPPORT
BLOCK WALL (BY OTHERS)

S1M01 SECTION
S5-01 1 : 20

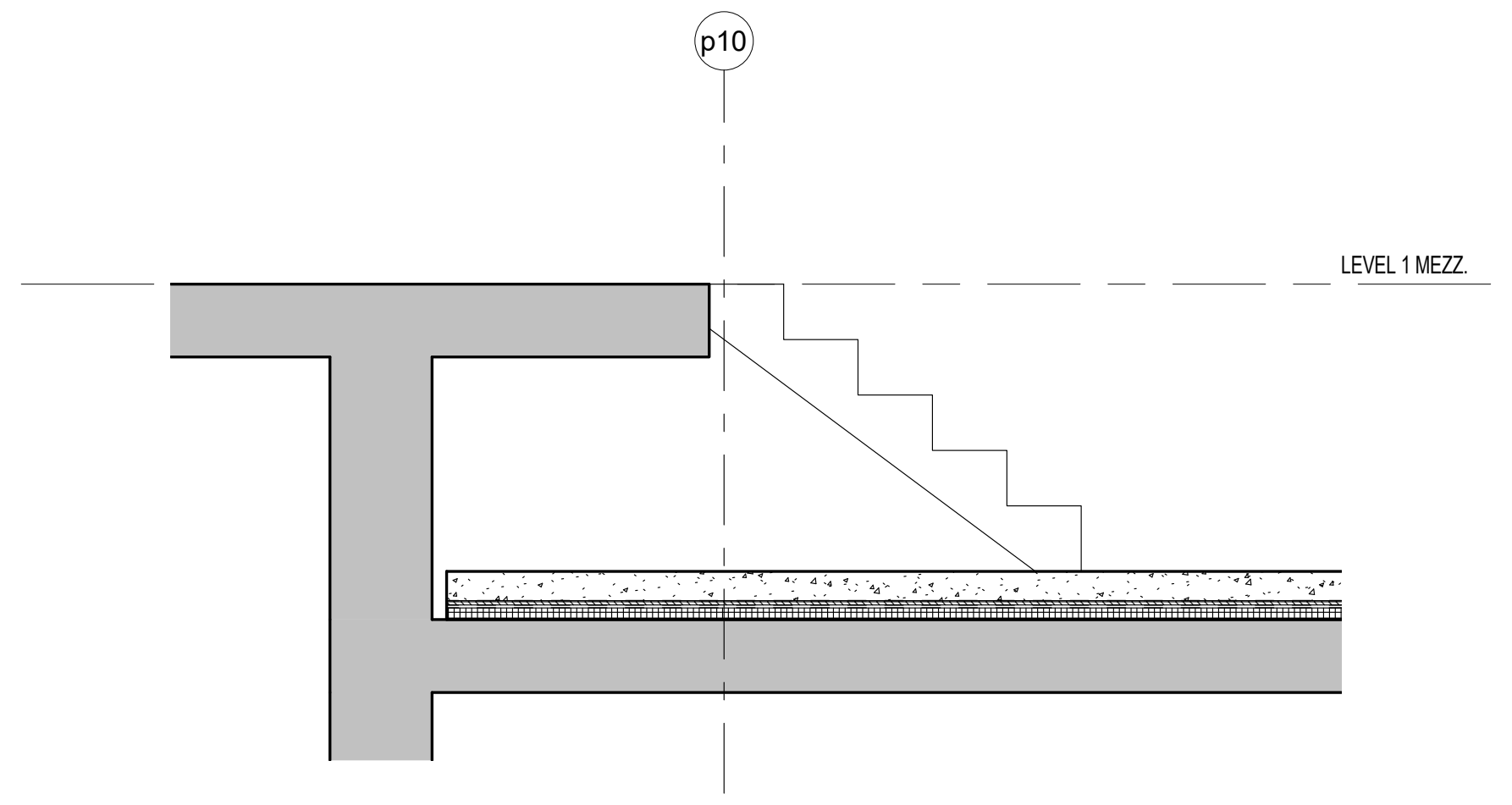
p10
LEVEL 1 MEZZ.

S1M02 SECTION
S5-01 1 : 20

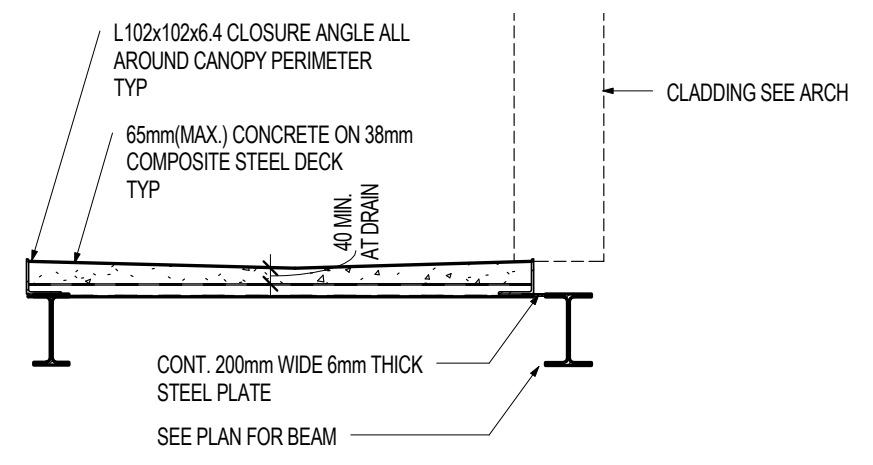
L102x102x6.4 CLOSURE ANGLE ALL
AROUND CANOPY PERIMETER
TYP
65mm(MAX.) CONCRETE ON 38mm
COMPOSITE STEEL DECK
TYP
40 MIN.
AT DRAIN
CLADDING SEE ARCH
CONT. 200mm WIDE 6mm THICK
STEEL PLATE
SEE PLAN FOR BEAM

S1M03 SECTION
S5-01 1 : 20

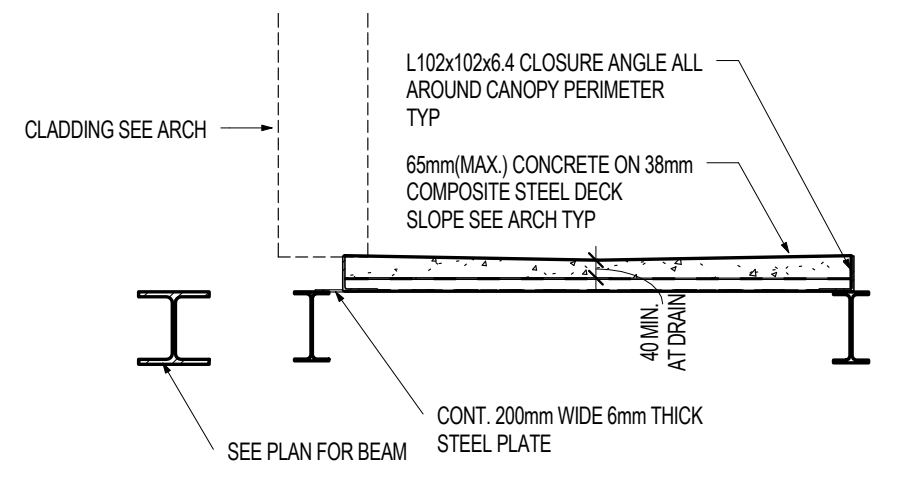
L102x102x6.4 CLOSURE ANGLE ALL
AROUND CANOPY PERIMETER
TYP
CLADDING SEE ARCH
65mm(MAX.) CONCRETE ON 38mm
COMPOSITE STEEL DECK
SLOPE SEE ARCH TYP
40 MIN.
AT DRAIN
SEE PLAN FOR BEAM
CONT. 200mm WIDE 6mm THICK
STEEL PLATE

S1M04 SECTION
S5-01 1 : 20

Contractor Must Check And Verify All Dimensions On The Job.

Do Not Scale The Drawings.

All Drawings, Specifications And Related Documents Are The Copyright Of The Architect And Must Be Returned Upon Request.

Reproduction Of Drawings, Specifications And Related Documents In Part Or Whole Is Forbidden Without The Architects Written Permission.

This Drawing Is Not To Be Used For Construction Until Signed ByThe Architect.

Date:

DEC.18,2015 DEC.18,2015

stephenson
ENGINEERING
2550 Victoria Park Ave. Suite 602
Toronto ON M2J 5A9 | Tel: (416) 635 9970
www.stephenson-eng.com | info@stephenson-eng.com

No	Revision	Date

No	Issued For	Date
7	ISSUED FOR STEEL TENDER	DEC.18,2015
4	BUILDING PERMIT RESUBMISSION	SEPT.21,2015
3	BUILDING PERMIT RESUBMISSION	JULY 22,2015
2	BUILDING PERMIT SUBMISSION	JUNE 12,2015

AQUAVISTA
AT BAYSIDE TORONTO

Drawing Title
PODIUM FLOOR
SECTIONS

Project
Hines TRIDEL®
AQUAVISTA
Block 3 - R3 & R4
Merchant's Whart
Toronto, ON

Scale
1 : 20
Drawn by
DC
Checked by
BK/BBS
Project No.
20140031
Date
DEC.18,2015
Drawing No.
S5-01

Plot Date: 3/9/2016 10:03:00 AM

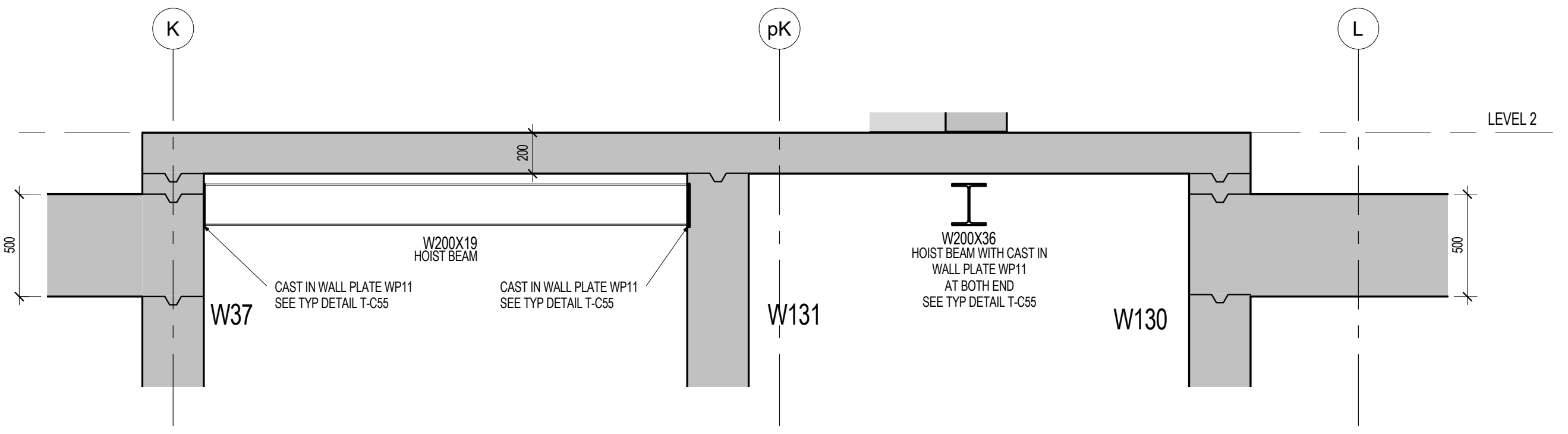
K
pK
L
LEVEL 2
200
500
500
W200X19
HOIST BEAM
CAST IN WALL PLATE WP11
SEE TYP DETAIL T-C55
CAST IN WALL PLATE WP11
SEE TYP DETAIL T-C55
W200X36
HOIST BEAM WITH CAST IN
WALL PLATE WP11
AT BOTH END
SEE TYP DETAIL T-C55
W37
W131
W130

S201 S6-01 SECTION
1 : 20

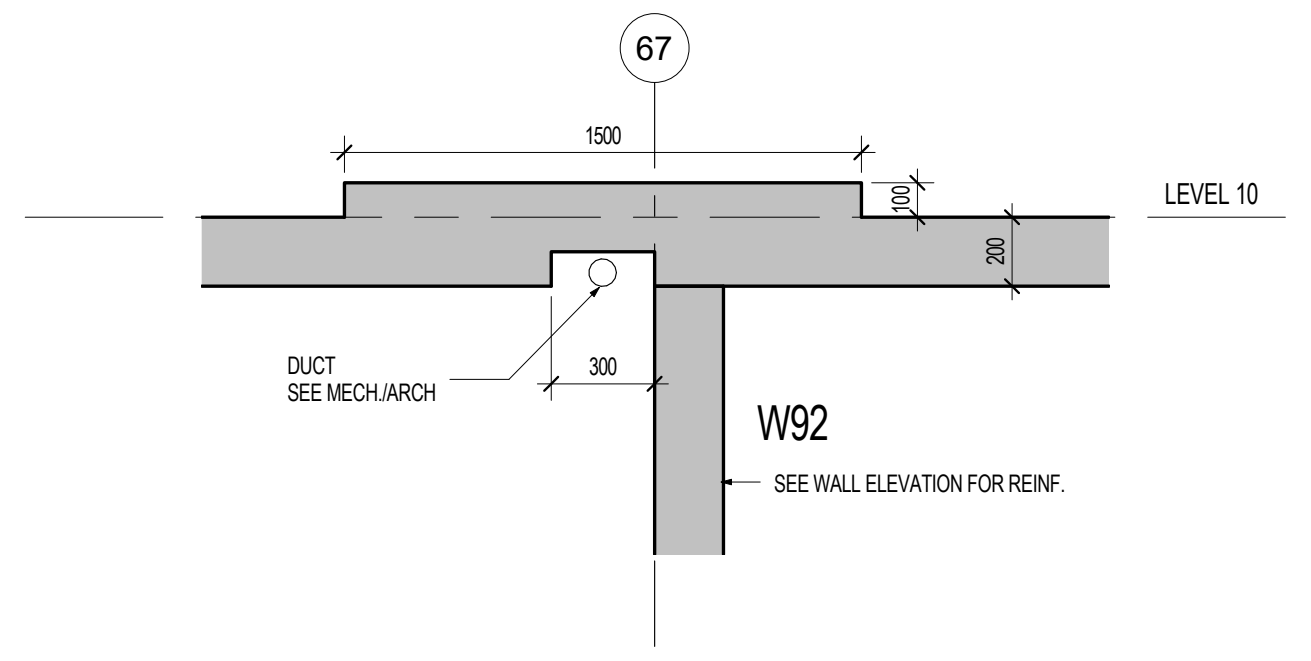
67
1500
LEVEL 10
100
200
DUCT
SEE MECH./ARCH
300
W92
SEE WALL ELEVATION FOR REINF.

S1001 S6-01 SECTION
1 : 20

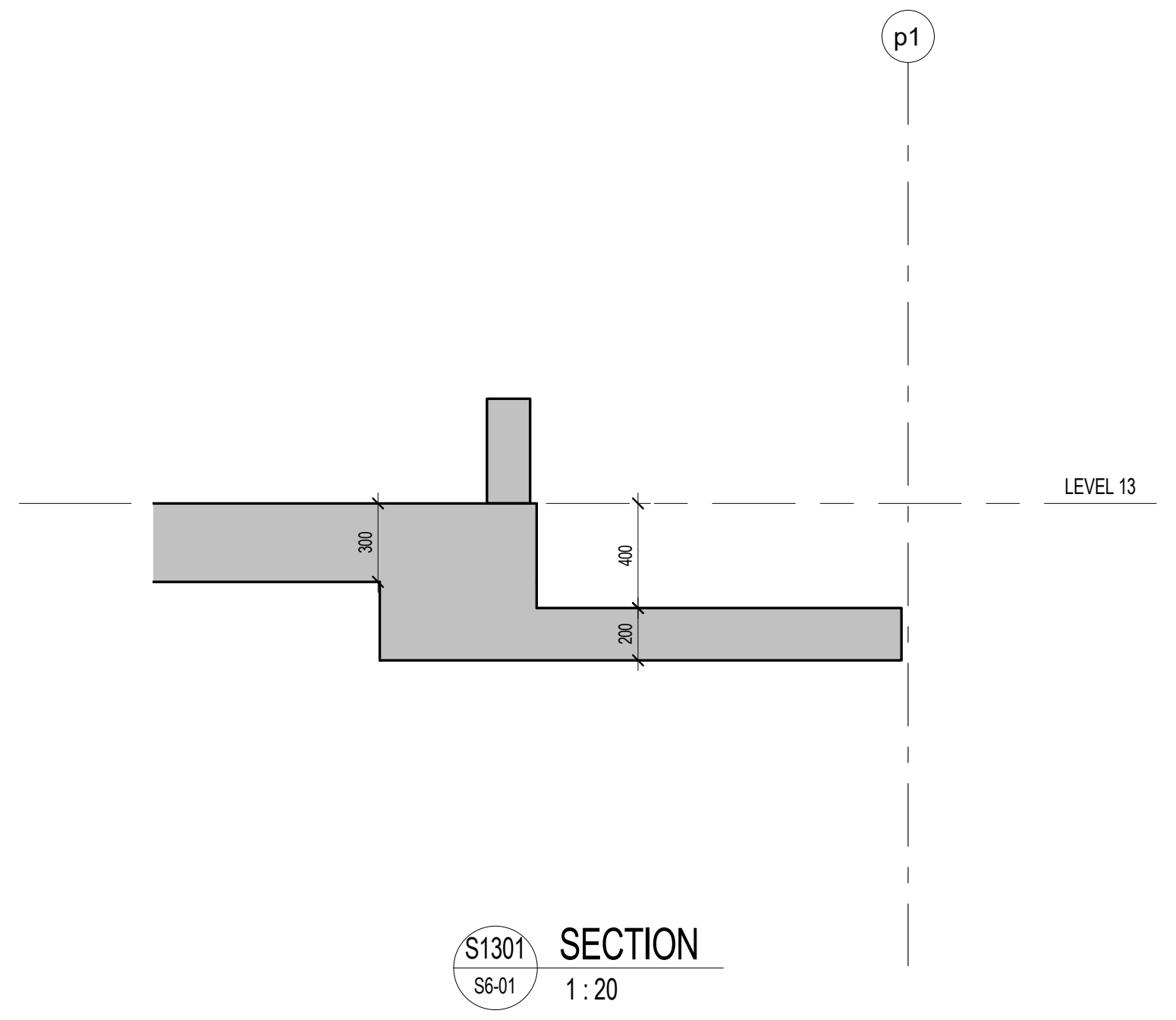
p1
LEVEL 13
300
400
200

S1301 S6-01 SECTION
1 : 20

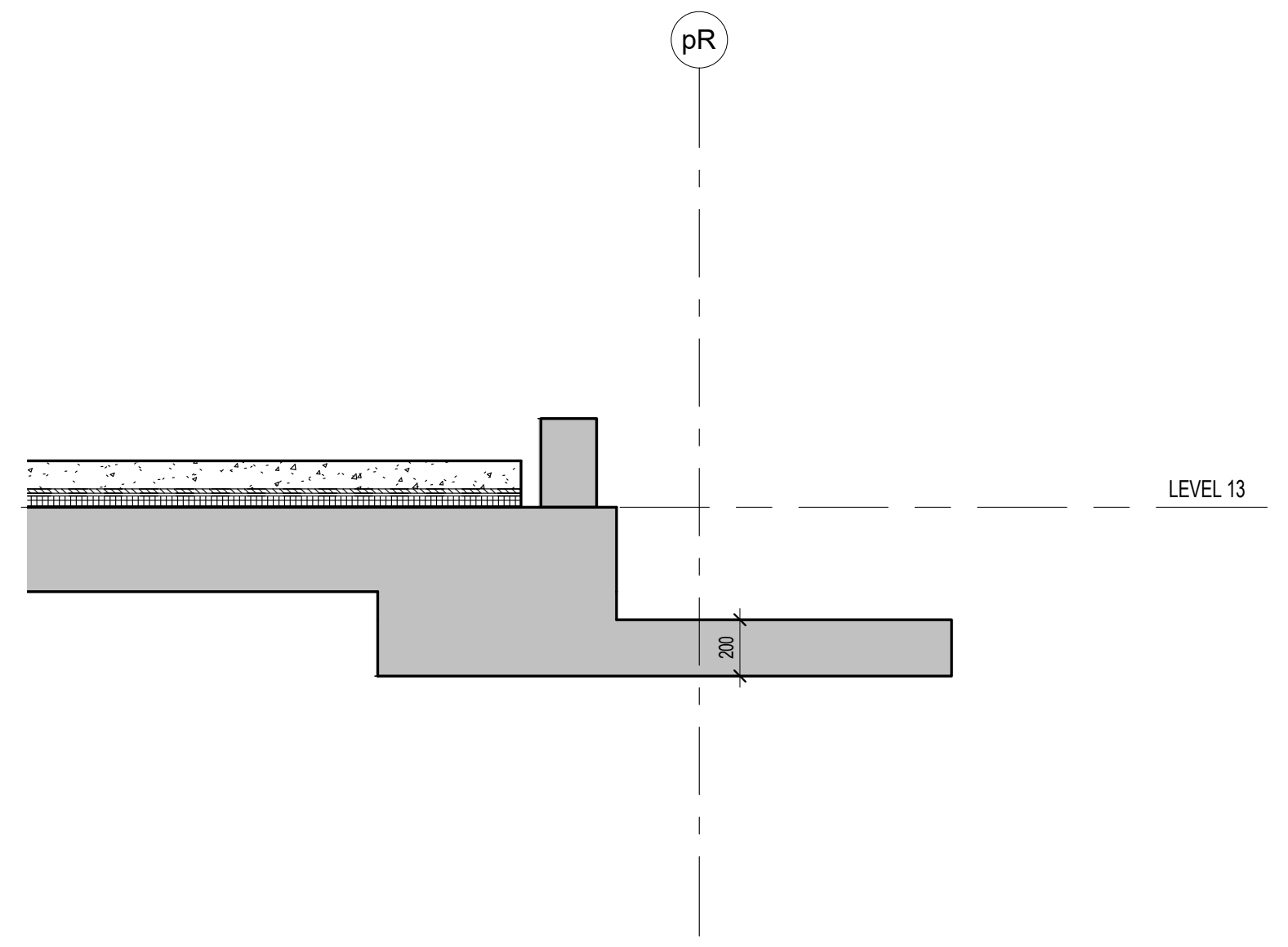
pR
LEVEL 13
200

S1302 S6-01 SECTION
1 : 20

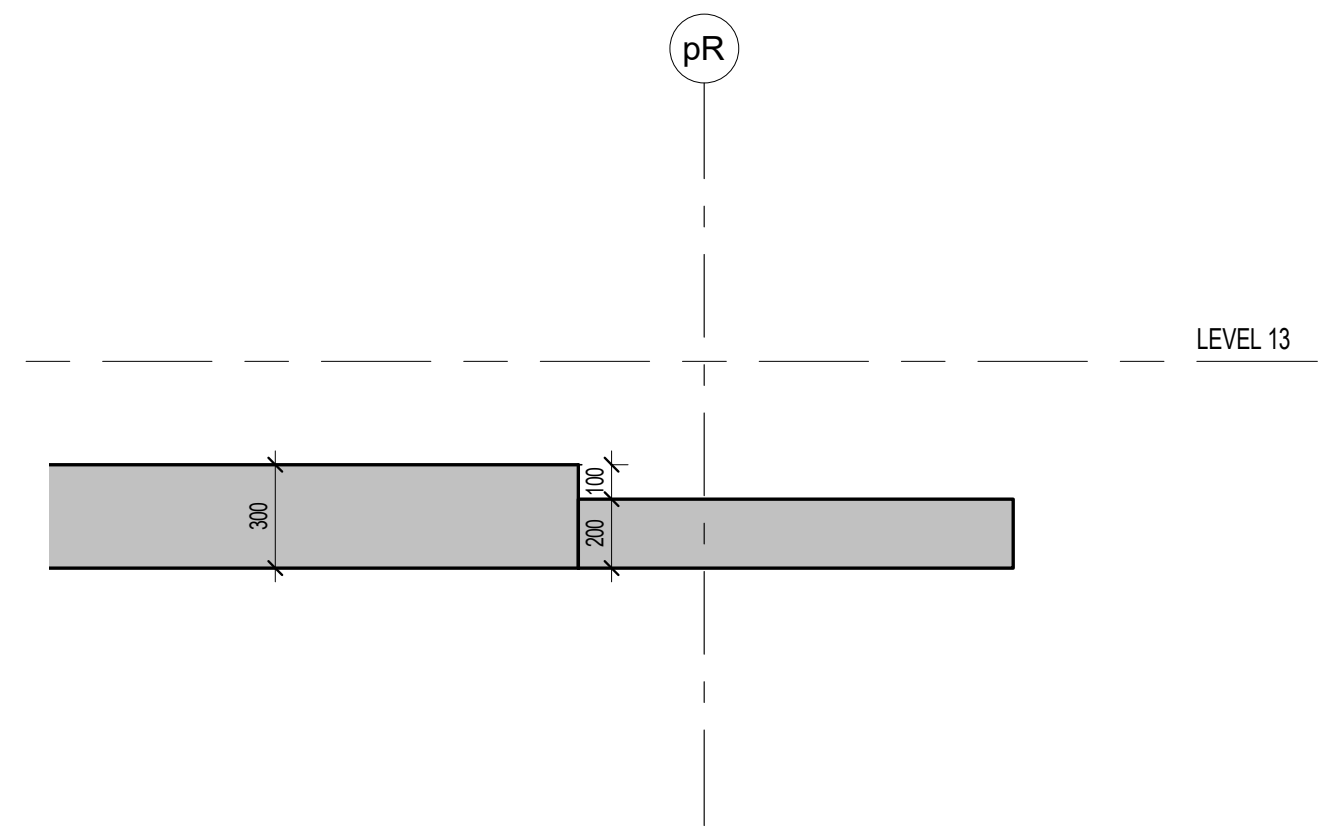
pR
LEVEL 13
300
100
200

S1303 S6-01 SECTION
1 : 20

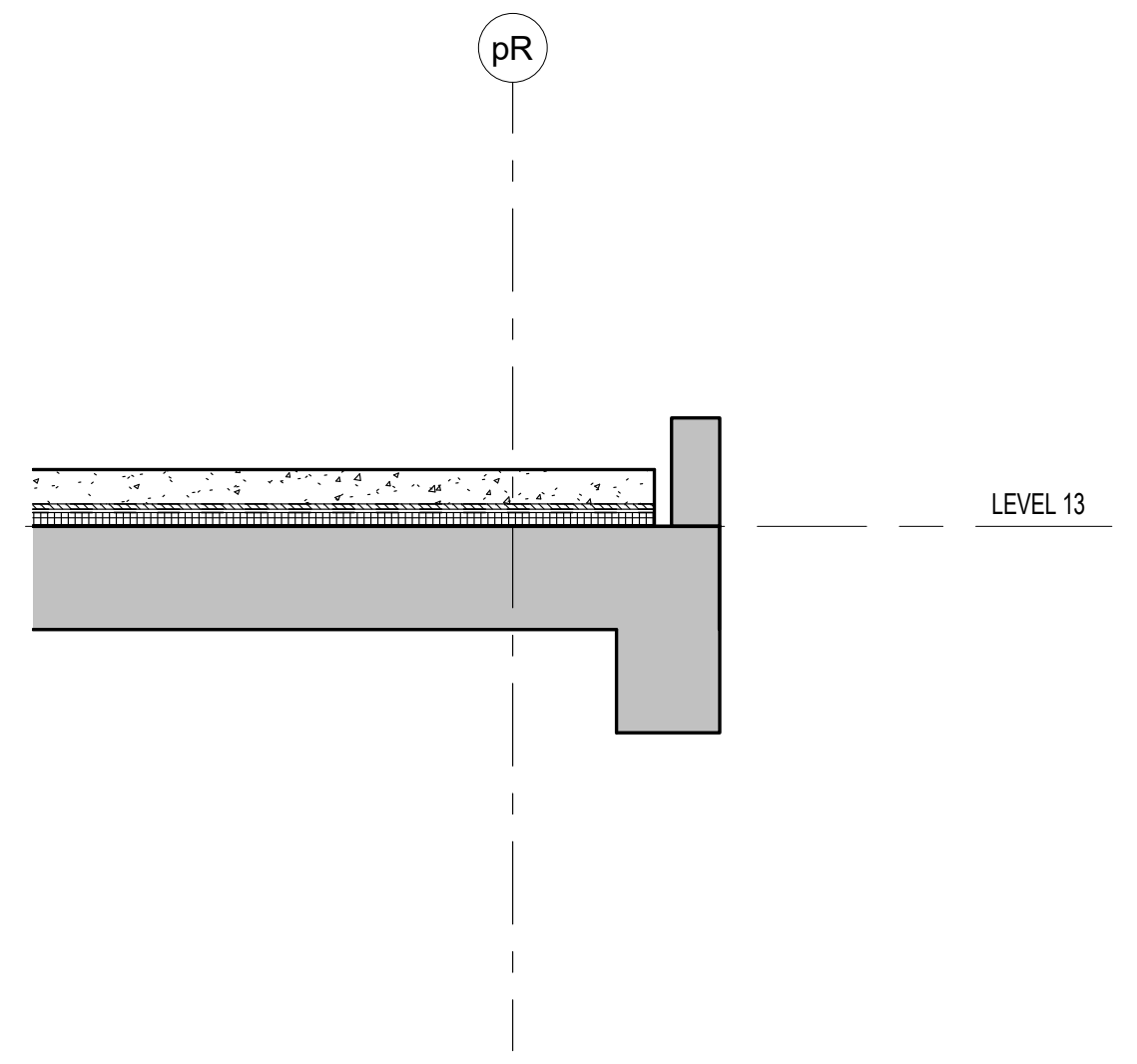

S1304 S6-01 SECTION
1 : 20

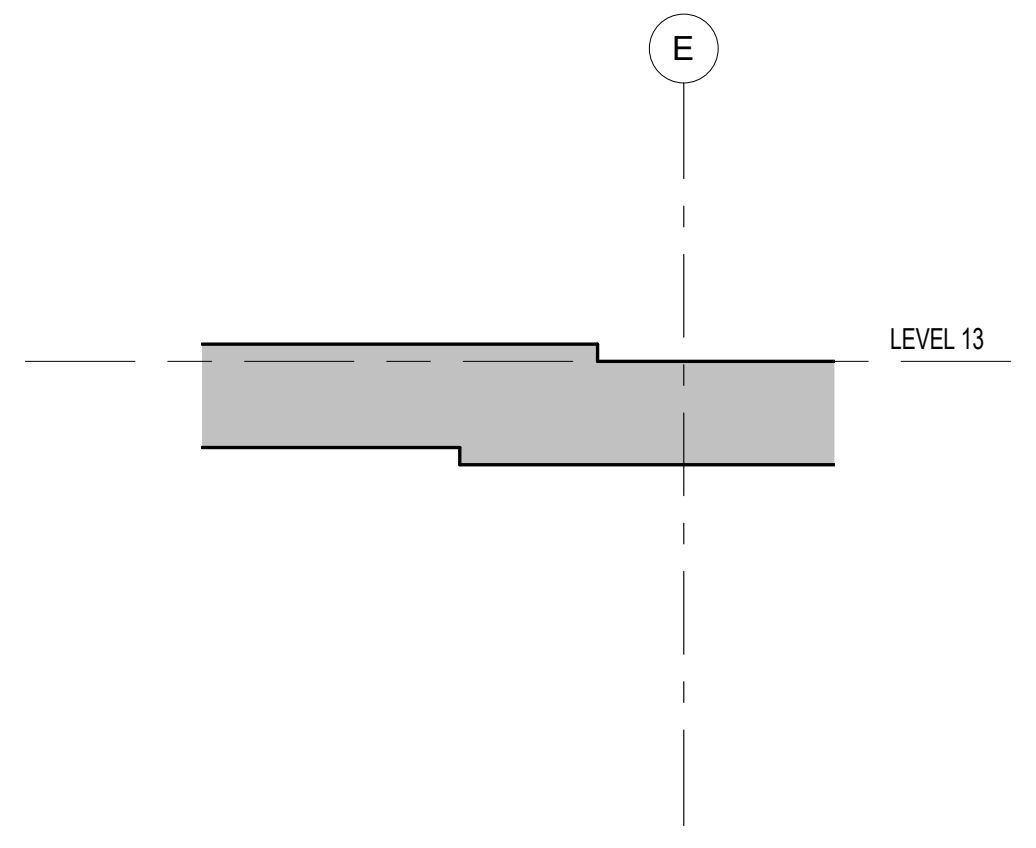

S1305 S6-01 SECTION
1 : 20

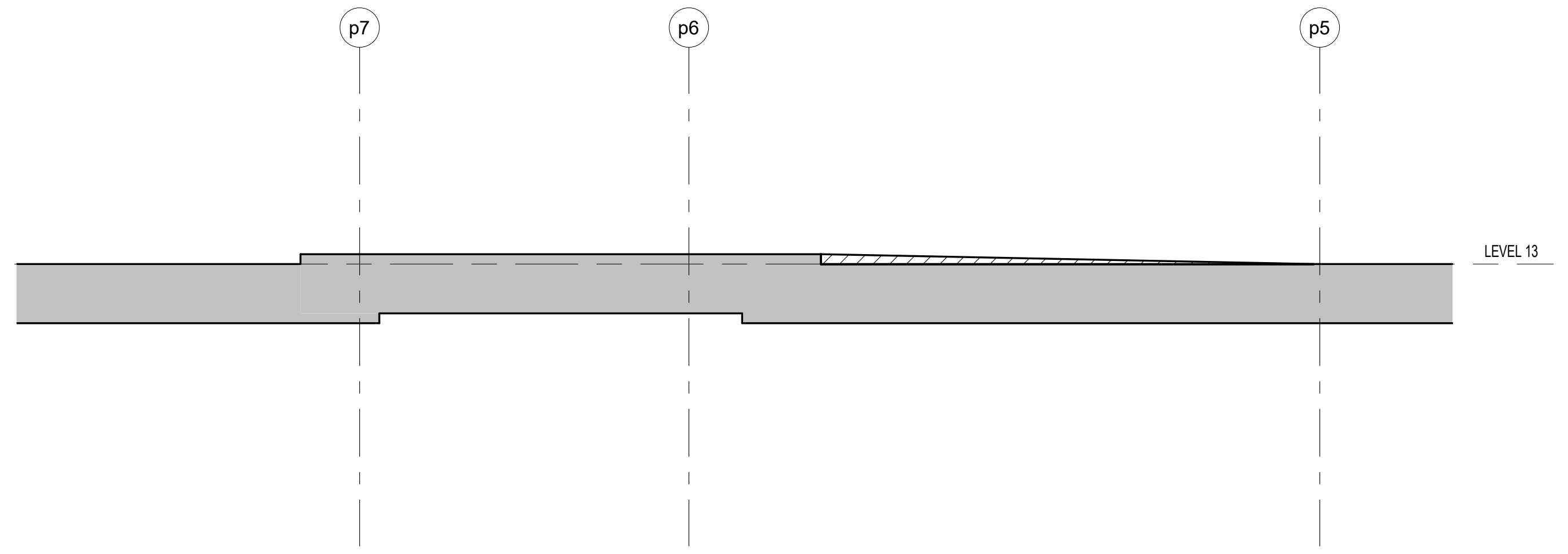
p7
p6
p5
LEVEL 13

S1306 S6-01 SECTION
1 : 20

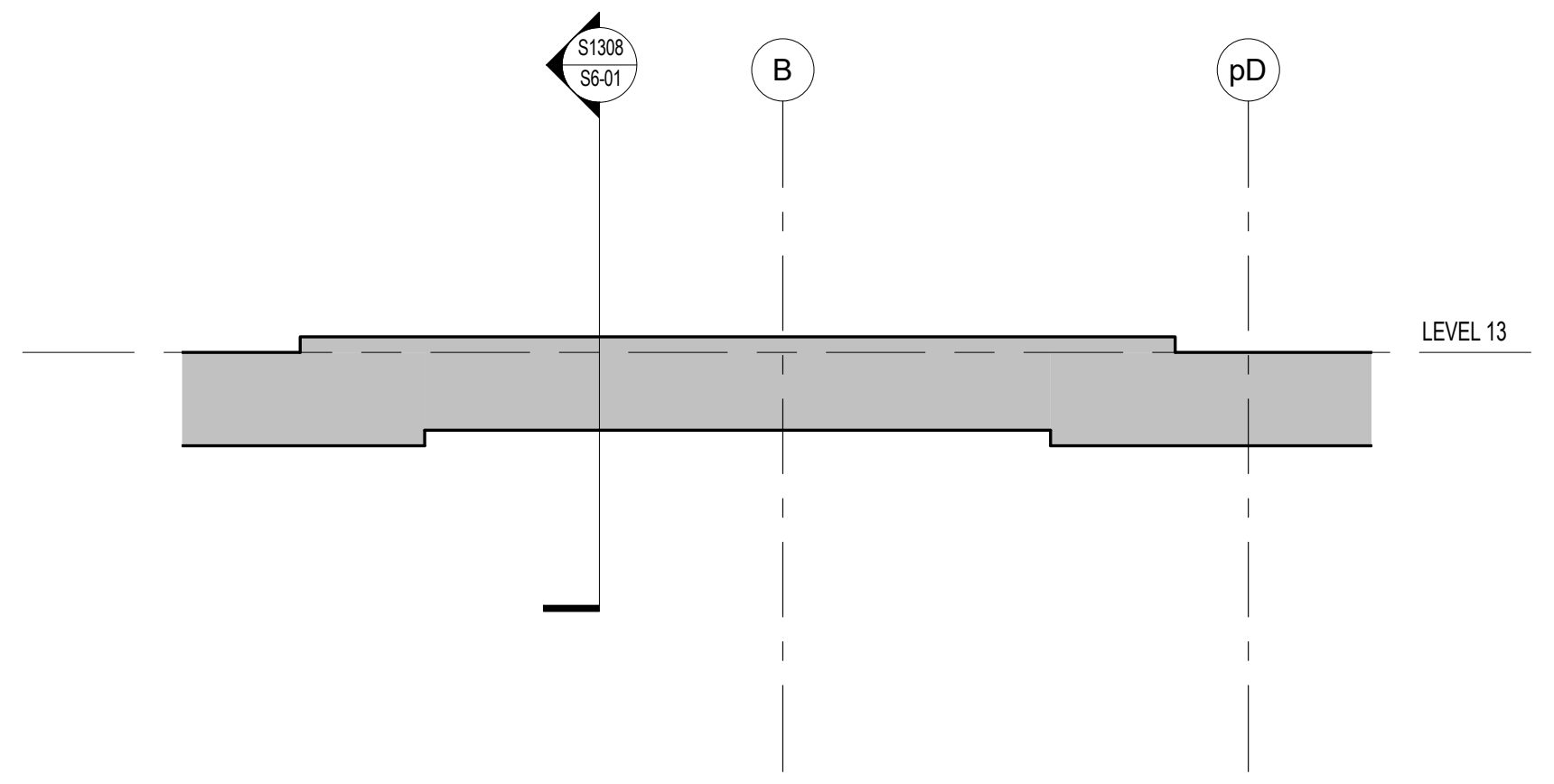
S1308
S6-01
B
pD
LEVEL 13

S1307 S6-01 SECTION
1 : 20

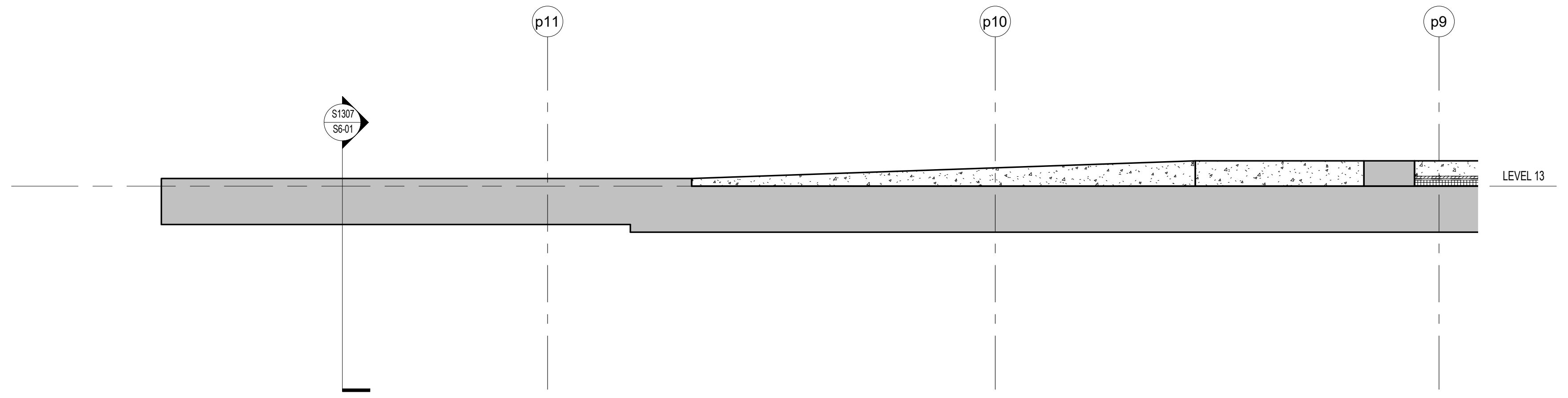
S1307
S6-01
p11
p10
p9
LEVEL 13

S1308 S6-01 SECTION
1 : 20

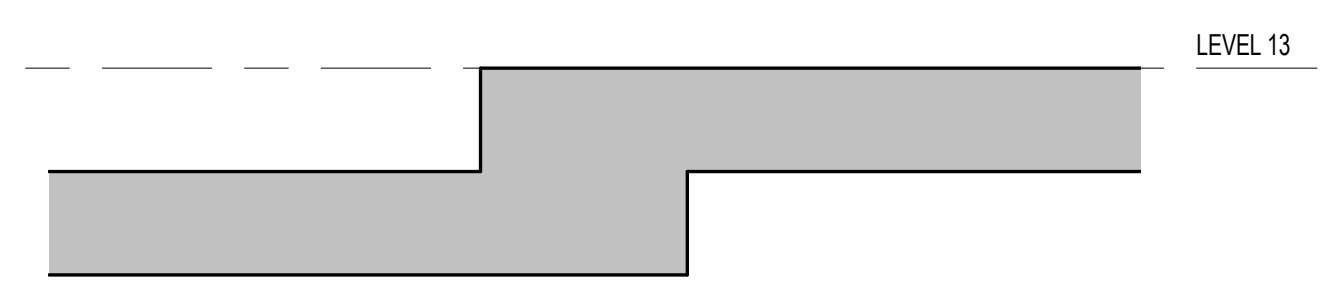

S1309 S6-01 SECTION
1 : 20

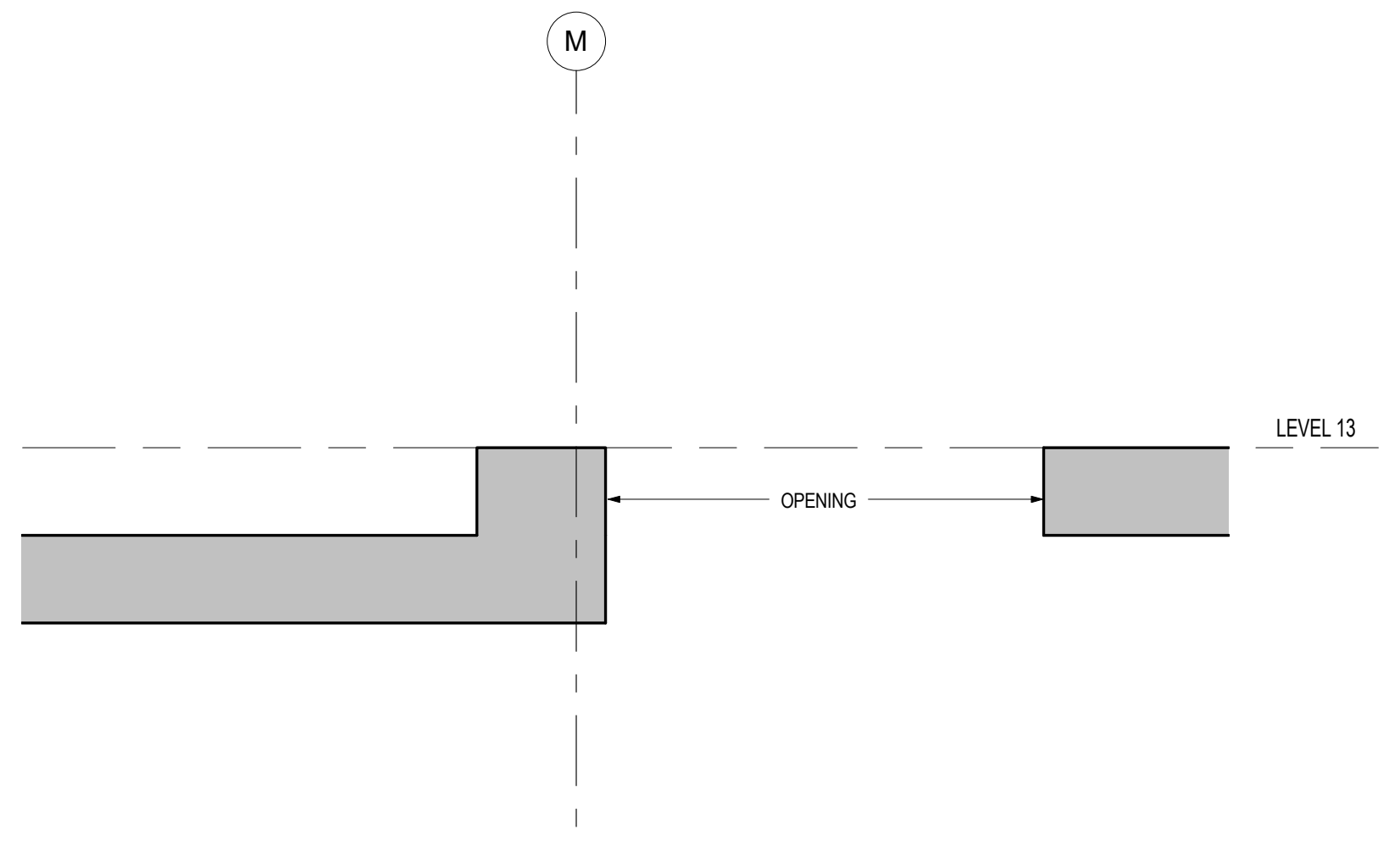
M
LEVEL 13
OPENING

S1310 S6-01 SECTION
1 : 20

Contractor Must Check And Verify All Dimensions On The Job.

Do Not Scale The Drawings.

All Drawings, Specifications And Related Documents Are The Copyright Of The Architect And Must Be Returned Upon Request.

Reproduction Of Drawings, Specifications And Related Documents In Part Or Whole Is Forbidden Without The Architects Written Permission.

This Drawing Is Not To Be Used For Construction Until Signed ByThe Architect.

Date:

DEC.18,2015 DEC.18,2015

stephenson
ENGINEERING
2550 Victoria Park Ave. Suite 602
Toronto ON M2J 5A9 | Tel: (416) 635 9970
www.stephenson-eng.com | info@stephenson-eng.com

No	Revision	Date

No	Issued For	Date
7	ISSUED FOR STEEL TENDER	DEC.18,2015

AQUAVISTA
AT BAYSIDE TORONTO

Drawing Title
FLOOR SECTIONS

Project
Hines TRIDEL®
AQUAVISTA
Block 3 - R3 & R4
Merchant's Whart
Toronto, ON

Scale
1 : 20
Drawn by
DC
Checked by
BBS
Project No.
20140031
Date
DEC.18,2015
Drawing No.
S6-01

Plot Date: 3/9/2016 10:03:02 AM

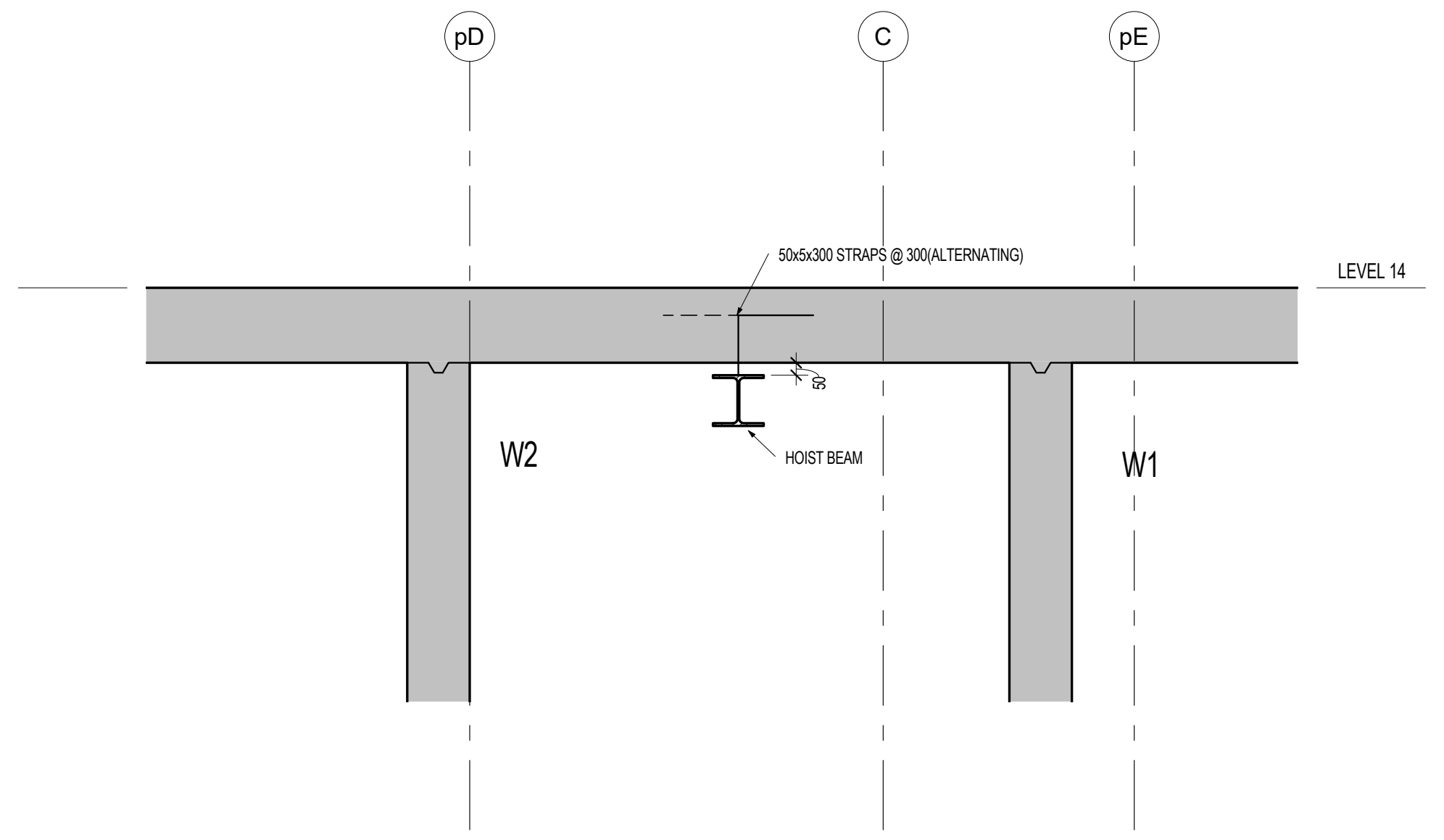
pD
C
pE
50x5x300 STRAPS @ 300(ALTERNATING)
LEVEL 14
50
HOIST BEAM
W2
W1

SR01 S7-01 SECTION
1 : 20

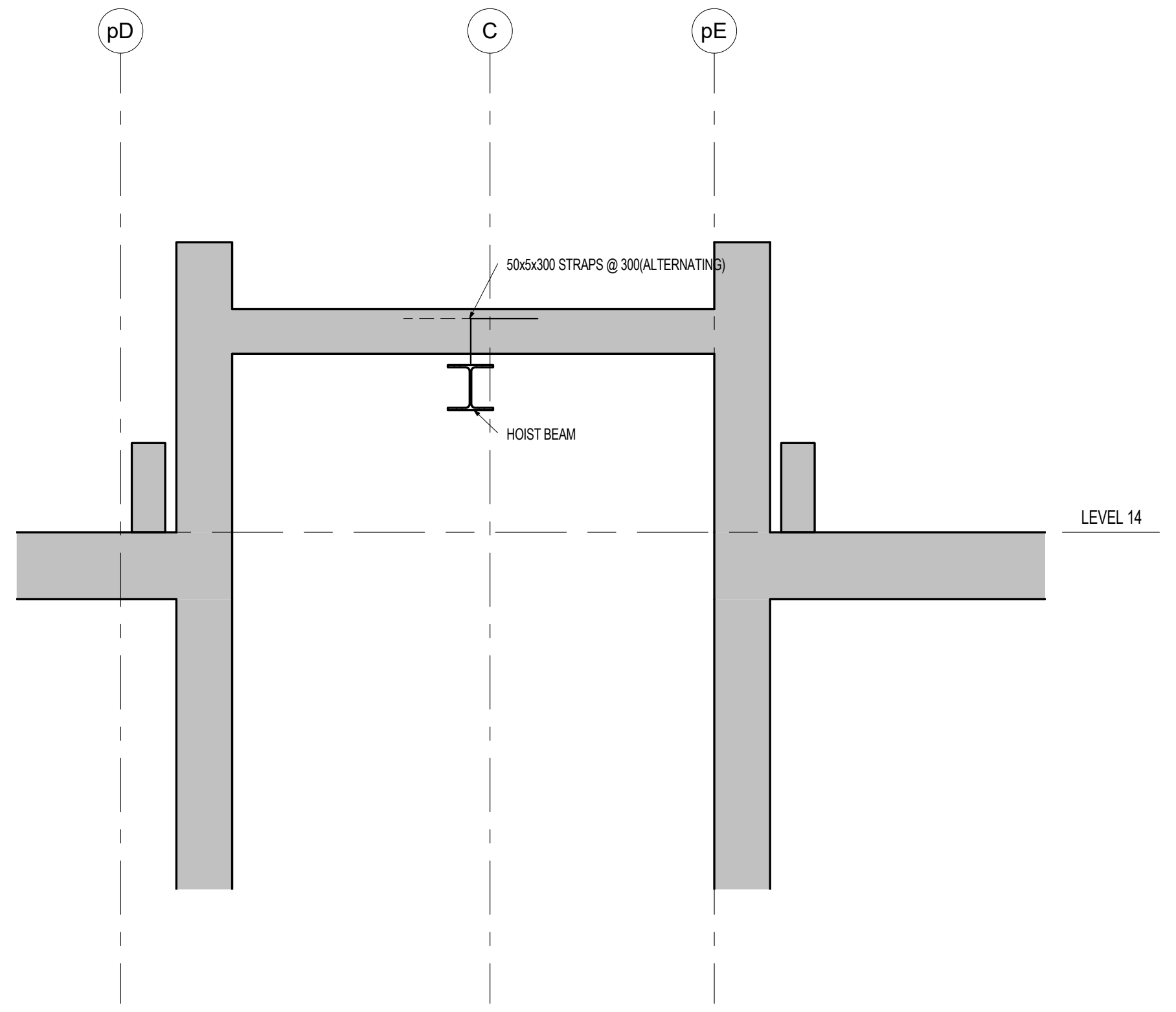
pD
C
pE
50x5x300 STRAPS @ 300(ALTERNATING)
HOIST BEAM
LEVEL 14

SR02 S7-01 SECTION
1 : 20

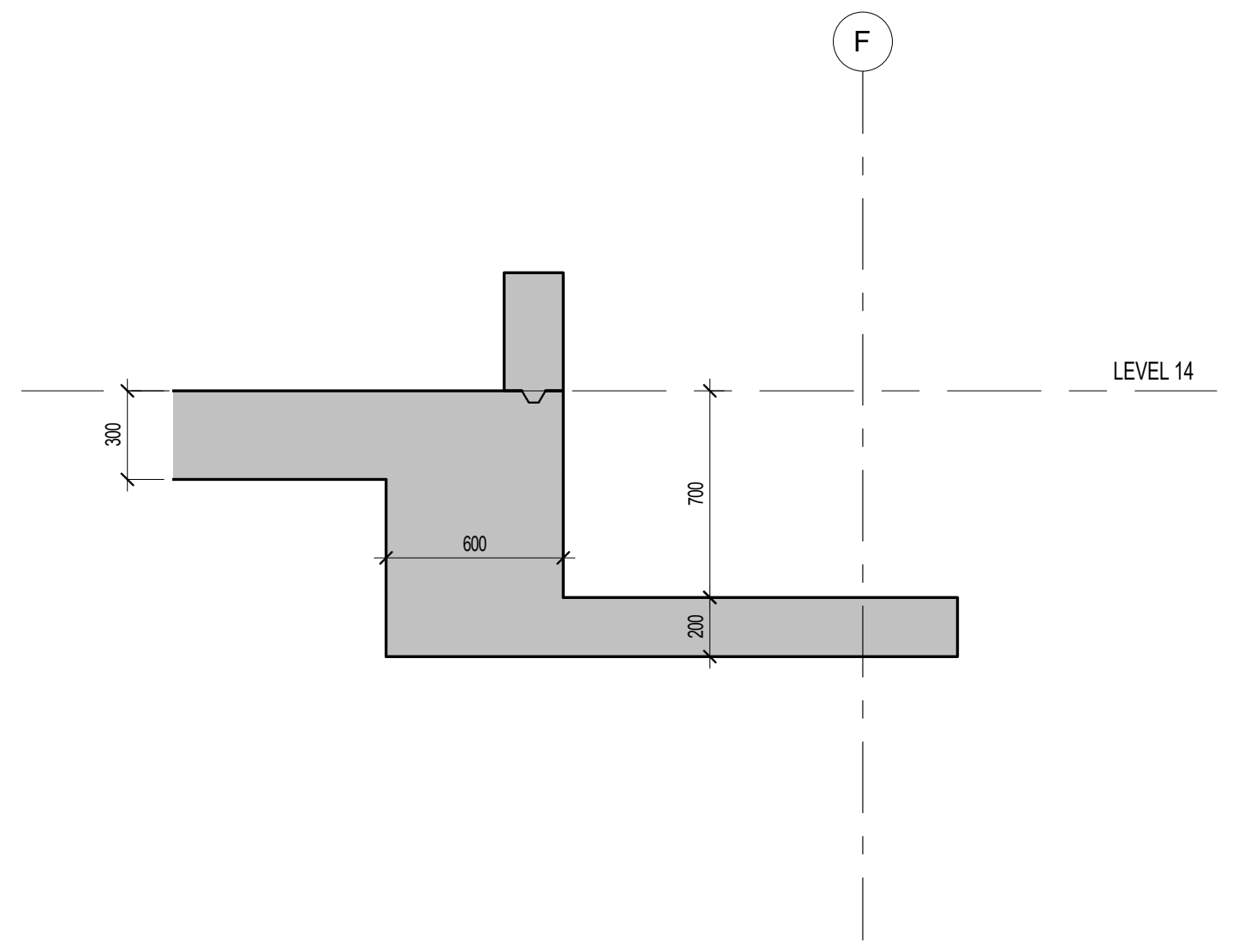
F
LEVEL 14
300
600
700
200

SR03 S7-01 SECTION
1 : 20

Contractor Must Check And Verify All Dimensions On The Job.

Do Not Scale The Drawings.

All Drawings, Specifications And Related Documents Are The Copyright Of The Architect And Must Be Returned Upon Request.

Reproduction Of Drawings, Specifications And Related Documents In Part Or Whole Is Forbidden Without The Architects Written Permission.

This Drawing Is Not To Be Used For Construction Until Signed ByThe Architect.

Date:

DEC.18,2015 DEC.18,2015

stephenson ENGINEERING
2550 Victoria Park Ave. Suite 602
Toronto ON M2J 5A9 | Tel: (416) 635 9970
www.stephenson-eng.com | info@stephenson-eng.com

No	Revision	Date

No	Issued For	Date
7	ISSUED FOR STEEL TENDER	DEC.18,2015

AQUAVISTA
AT BAYSIDE TORONTO

Drawing Title
ROOF SECTIONS

Project
Hines TRIDEL®
AQUAVISTA
Block 3 - R3 & R4
Merchant's Whart
Toronto, ON

Scale
1 : 20
Drawn by
DC
Checked by
BBS
Project No.
20140031
Date
DEC.18,2015
Drawing No.
S7-01

Plot Date: 3/9/2016 10:03:04 AM

GENERAL NOTES T-A01

1. GENERAL
   - 1.1. DESIGN AND CONSTRUCTION IS TO CONFORM TO THE REQUIREMENTS OF THE ONTARIO BUILDING CODE. REFER ALSO TO TYPICAL DETAILS, NOTES UNDER PLANS AND SCHEDULES ON THE STRUCTURAL DRAWINGS, AND TO THE SPECIFICATION. ALL CODES, MANUALS, STANDARDS AND SPECIFICATIONS REFERRED TO SHALL BE THE LATEST EDITIONS INCLUDING ALL REVISIONS AND ADDENDA. ALL DIMENSIONS, OTHER THAN PURELY STRUCTURAL DIMENSIONS SHOWN ON THE STRUCTURAL DRAWINGS MUST BE CHECKED AGAINST THE ARCHITECTURAL DRAWINGS AND ANY INCONSISTENCIES REPORTED TO THE ARCHITECT BEFORE PROCEEDING WITH THE WORK. STRUCTURAL DRAWINGS MUST NOT BE SCALED.
   - 1.2. REFER TO ARCHITECTURAL, MECHANICAL AND ELECTRICAL DRAWINGS FOR LOCATIONS AND SIZES OF OPENINGS, TRENCHES, PITS, SUMPS, EQUIPMENT, SLEEVES, DEPRESSIONS, GROOVES AND CHAMFERS NOT INDICATED ON THE STRUCTURAL DRAWINGS. UNLESS SPECIFICALLY NOTED OTHERWISE, THE ABOVE ITEMS WHERE SHOWN ON THE STRUCTURAL DRAWINGS ARE INDICATED ONLY APPROXIMATELY AS TO SIZE AND LOCATION.
   - 1.3 UNLESS SPECIFICALLY NOTED OTHERWISE ON THE DRAWINGS, NO PROVISION HAS BEEN MADE IN THE DESIGN FOR CONDITIONS OCCURRING DURING CONSTRUCTION. THE CONTRACTOR IS TO PROVIDE ALL NECESSARY BRACING AND SHORING REQUIRED FOR STRESSES AND INSTABILITY OCCURRING FROM ANY CAUSE DURING CONSTRUCTION. THE CONTRACTOR SHALL ACCEPT FULL RESPONSIBILTY FOR ALL SUCH MEASURES. IT SHALL ALSO BE THE RESPONSIBLITY OF THE CONTRACTOR TO PROVIDE ALL NECESSARY BRACING, SHORING, SHEET PILING OR OTHER TEMPORARY SUPPORTS TO SAFEGUARD ALL EXISTING OR ADJACENT STRUCTURES AFFECTED BY THIS WORK. CONTRACTOR TO PROVIDE SHOP DRAWINGS FOR CONSULTANTS REVIEW.
2. SHOP DRAWINGS, PLACING DRAWINGS AND BAR LISTS:-
   - 2.1. FOR ALL STRUCTURAL COMPONENTS SHOWN ON THE STRUCTURAL DRAWINGS, SUBMIT COPIES OF SHOP DRAWINGS AS DIRECTED FOR REVIEW BY THE STRUCTURAL CONSULTANT.SHOP DRAWINGS TO SHOW COMPLETE INFORMATION FOR THE FABRICATION AND ERECTION OF THE STRUCTURAL COMPONENTS.
   - 2.2. REVIEW OF SHOP DRAWINGS BY THE STRUCTURAL CONSULTANT IS ONLY TO ASSESS THAT THE SUBMITTED SHOP DRAWINGS REFLECT THE INTENT OF THE STRUCTURAL DESIGN.
   - 2.3. REVIEW BY THE STRUCTURAL CONSULTANT SHALL NOT RELIEVE THE CONTRACTOR OF THE RESPONSIBILITY FOR SEEING THAT THE WORK IS COMPLETE, ACCURATE AND IN CONFORMITY WITH THE STRUCTURAL DRAWINGS AND SPECIFICATIONS.
3. INSPECTION AND TESTING:-
   - 3.1. A SOILS CONSULTANT AND AN INDEPENDENT INSPECTION AND TESTING COMPANY ARE TO BE ENGAGED TO CARRY OUT THE FOLLOWING SERVICES:-
     - 3.1.1. BEARING SOIL - REFER TO NOTES ON STRUCTURAL DRAWINGS AND ALSO TO THE SOIL REPORT.
     - 3.1.2. FILL UNDER SLAB-ON-GRADE - CONFORM THAT FILL MATERIAL USED IS SATISFACTORY AND THAT THE REQUIRED DEGREE OF COMPACTION HAS BEEN ATTAINED.
     - 3.1.3. CAST-IN-PLACE AND PRECAST CONCRETE - ROUTINE INSPECTION OF MATERIALS, INCLUDING SLUMP, CYLINDER AND AIR ENTRAINMENT TESTS AND REINFORCING ROD TESTS WHEN REQUIRED OR DIRECTED IN ACCORDANCE WITH CSA STANDARD A23.2.
     - 3.1.4. THE PROJECT SUPERINTENDENT IS TO ADVISE THE STRUCTURAL CONSULTANT A MINIMUM OF 24 HOURS IN ADVANCE OF A CONCRETE POUR FOR A REVIEW OF PREPARATIONS.
     - 3.1.5. STRUCTURAL STEEL AND OWSJ - ROUTINE SHOP AND FIELD INSPECTION SHALL BE CARRIED OUT IN ACCORDANCE WITH THE REQUIREMENTS CSA S16.
     - 3.1.6. STEEL DECK - SEE STEEL DECK NOTES.
     - 3.1.7. MASONRY - WHEN REQUIRED OR DIRECTED, CONCRETE BLOCKS SHALL BE TESTED IN ACCORDANCE WITH ASTM C140 BRICKS IN ACCORDANCE WITH CAN/CSA A82; AND MORTAR AND/OR GROUT IN ACCORDANCE WITH CSA A179.
   - 3.2. ALL INSPECTION AND TESTING SERVICES ARE TO BE PERFORMED BY COMPANIES CERTIFIED BY THE CANADIAN STANDARDS ASSOCIATION AND FOR WELDING, INSPECTORS ARE TO BE CERTIFIED BY THE CANADIAN WELDING BUREAU.
4. FOUNDATIONS
   - 4.1. REFER TO NOTES UNDER FOUNDATION PLANS. ALL EXTERIOR FOOTINGS OR OTHER FOOTINGS EXPOSED TO FREEZING IN THE FINISHED BUILDING SHALL BE FOUNDED AT A MINIMUM OF 1200mm (4'-0") BELOW FINISHED GRADE, UNLESS OTHERWISE NOTED. FOOTINGS EXPOSED TO FROST ACTION DURING CONSTRUCTION SHALL BE PROTECTED BY A MINIMUM OF 1200mm (4'-0") OF EARTH OR ITS EQUIVALENT SUFFICIENT TO PREVENT FREEZING.
   - 4.2. THE LINE OF SLOPE BETWEEN ADJACENT EXCAVATIONS FOR FOOTINGS OR ALONG STEPPED FOOTINGS SHALL NOT EXCEED A RISE OF 7 IN A RUN OF 10, MAXIMUM STEP APPROX. 600mm (2'-0").
   - 4.3. PIER DEPTHS AND FOOTING ELEVATIONS SHOWN ON THE STRUCTURAL DRAWINGS ARE BASED UPON INFORMATION AVAILABLE AT THE TIME OF PREPARATION OF THE STRUCTURAL DRAWINGS.
   - 4.4. IF ACTUAL JOB SITE OR SOIL CONDITIONS VARY FROM THOSE ASSUMED, THEN WRITTEN DIRECTIONS MUST BE OBTAINED FROM THE STRUCTURAL CONSULTANT BEFORE PROCEEDING WITH THE WORK.
   - 4.5. KEEP EXCAVATIONS CONTINUOUSLY DRY BEFORE CONCRETE IS PLACED. IF THE SOIL IS SOFTENED BY WATER, THE EXCAVATION SHALL BE EXTENDED BELOW THE SOFTENED MATERIAL AND THE BOTTOM OF THE FOOTINGS LOWERED TO SUIT.
5. BACKFILLING AND COMPACTION:-
   - 5.1. SLABS-ON-GRADE AND ALL STRUCTURAL ELEMENTS FRAMING INTO WALLS WHICH RETAIN EARTH MUST BE IN PLACE BEFORE BACKFILLING.
   - 5.2. AT FOUNDATION WALLS WITH GRADE BOTH SIDES, UNLESS ADEQUATELY SHORED, BACKFILL AND COMPACT EACH SIDE OF WALL SIMULTANEOUSLY.
   - 5.3. UNDER SLAB-ON-GRADE, REMOVE SOFT SPOTS, ORGANIC AND FOREIGN MATTER IN THE SUB-GRADE. (WHERE SUB-GRADE CONSISTS OF COMPACTED FILL, REFER TO SPECIFIC NOTES ON THE DRAWINGS).
   - 5.4. BACKFILL UNDER SLAB-ON-GRADE, IN FOOTING EXCAVATIONS AND IN TRENCHES ONLY WITH APPROVED MATERIAL. UNLESS SPECIFICALLY NOTED OTHERWISE, BACKFILLING SHALL BE CARRIED OUT IN MAXIMUM OF 200mm (8")THICK LIFTS OF LOOSE FILL EACH COMPACTED TO A MINIMUM OF 95% STANDARD PROCTOR MAXIMUM DRY DENSITY.
   - 5.5. UNLESS OTHERWISE NOTED, PROVIDE IMMEDIATELY UNDER SLABS-ON-GRADE A MINIMUM OF 200mm (8") OF COMPACTED (MTC) GRANULAR 'B' MATERIAL. COMPACTION TO ACHIEVE A MINIMUM OF 98% STANDARD PROCTOR MAXIMUM DRY DENSITY.

CAST-IN-PLACE CONCRETE NOTES T-A02

1. GENERAL
   - 1.1. PROVIDE ALL LABOUR, MATERIALS, TOOLS AND EQUIPMENT REQUIRED TO CARRY OUT THE WORK.
   - 1.2. REFER ALSO TO GENERAL NOTES, NOTES UNDER PLANS AND SCHEDULES, TYPICAL DETAILS AND SPECIFICATION.
2. PRODUCTS
   - 2.1. PORTLAND CEMENT, WATER AND AGGREGATES SHALL CONFORM TO CSA STANDARD A23.1.
   - 2.2. PROVIDE AN APPROVED WATER REDUCING ADDITIVE IN ALL CONCRETE. PROVIDE AN APPROVED AIR ENTRAINING ADDITIVE IN ALL CONCRETE WHICH WILL BE EXPOSED TO A FREEZE/THAW CYCLE AND/OR THE ACTION OF DE-ICING SALT. ADMIXTURES SHALL CONFORM TO CSA STANDARD A23.1.
   - 2.3. FORMWORK SHALL CONFORM TO CSA STANDARD A23.1, CSA STANDARD S269.3 AND FALSEWORK SHALL CONFORM TO CSA S269.1.
   - 2.4. IF SO INSTRUCTED, THE DESIGNS FOR THE FORMWORK SHALL BE SUBMITTED FOR REVIEW BEFORE CONSTRUCTION. FORMWORK DRAWINGS AND DESIGN SHALL BEAR THE STAMP OF A LICENSED PROFESSIONAL ENGINEER.
   - 2.5. UNLESS OTHERWISE NOTED PROVIDE SLAB AND BEAM FORMS WITH AN UPWARD CAMBER OF 2 mm/1000 mm (1/4" PER 10'-0") OF SPAN, AND UPLIFT ENDS OF CANTILEVERED SLAB AND BEAM FORMS 3 mm/ 1000 mm (1/4" PER 8'-0") OF CANTILEVER LENGTH.
   - 2.6. PROVIDE STANDARD ADJUSTABLE MASONRY ANCHOR SLOTS FOR ALL MASONRY FACING OR ABUTTING CONCRETE FACES.
   - 2.7. PROVIDE AND/OR INSTALL STANDARD ADJUSTABLE INSERTS AND ALL OTHER CAST-IN INSERTS AS REQUIRED BY THE ARCHITECTURAL, STRUCTURAL, MECHANICAL AND ELECTRICAL DRAWINGS AND SPECIFICATION.
   - 2.8. REINFORCING STEEL UNLESS SPECIFICALLY NOTED, SHALL BE DEFORMED BARS CONFORMING TO CAN/CSA -G30.18-M GRADE 400 (58000 PSI).
   - 2.9. WELDED WIRE FABRIC TO BE SUPPLIED IN FLAT SHEETS ONLY, UNLESS APPROVED OTHERWISE.
   - 2.10. REINFORCING SHALL BE DETAILED, BENT, PLACED AND SUPPORTED TO CONFORM TO ACI DETAILING MANUAL AND THE MANUAL OF STANDARD PRACTICE PUBLISHED BY THE REINFORCING STEEL INSTITUTE OF CANADA.
   - 2.11. DRY-PACK GROUT TO BE 1 PART PORTLAND CEMENT TO 1 1/2 PARTS SAND TO 2 PARTS OF 8 mm PEA GRAVEL WITH ONLY SUFFICIENT WATER TO DAMPEN MIXTURE. COMPRESIIVE STRNGTH 50MPa AT 28 DAYS.
   - 2.12. NON-SHRINK GROUT TO BE AN APPROVED PRE-MIXED PROPRIETARY PRODUCT.
   - 2.13. PROVIDE APPROVED EXTRUDED PVC WATERSTOPS OF SIZE AND STYLE INDICATED, WITH PRE-WELDED CORNERS AND INTERSECTIONS. SEE ALSO TYPICAL DETAILS.
   - 2.14. CURING AND SEALING COMPOUNDS WHERE APPROVED FOR USE TO CONFORM TO ASTM STANDARD C309. GENERALLY ALL CONCRETE SURFACES ARE TO BE SEALED UNLESS NOTED OTHERWISE. COMPOUNDS ARE TO BE COMPATIBLE WITH APPLIED FINISHES.
   - 2.15. SHEAR REINFORCMENT AT SLAB CONNECTION AS SHOWN ON DRAWINGS AND DETAILS, SHALL BE STUDRAILS® AS MANUFACTURED BY DECON®. THE COMPLETE AND FINISHED STUDRAILI® SHALL BE ICC ES EVALUATED AND WELDING SHALL TAKE PLACE IN A ICC ES APPROVED AND AUDITED FACILITY. STUDRAILS® SHALL CONFORM TO THE LATEST UPDATE OF ASTM A1044.
3. EXECUTION
   - 3.1. MINIMUM COMPRESSIVE STRENGTH FOR CONCRETE @ 28 DAYS SHALL BE AS NOTED ON THE DRAWINGS (20MPa MINIMUM).
   - 3.2. SLUMP AT THE POINT OF DISCHARGE SHALL BE CONSISTENT AT 80 mm ±30mm (3" ±1 1/8") UNLESS NOTED OTHERWISE.GREATER SLUMPS ARE NOT ACCEPTABLE.
   - 3.3. CONCRETE MIXING, TRANSPORTATION, HANDLING AND PLACING SHALL CONFORM TO CSA STANDARD A23.1.
   - 3.4. CONSTRUCTION JOINTS FOR WALLS ARE BASED UPON VERTICAL JOINTS AT A MAXIMUM SPACING OF 10000mm (30'-0") .UNLESS CONTROL JOINTS ARE PROVIDED AS PER DETAIL T-C16. TOTAL LENGTH OF POUR TO BE DISCUSSED WITH ENGINEER PRIOR TO PROCEEDING.
   - 3.5. CONSTRUCTION JOINTS FOR WALLS, SLABS, AND BEAMS NOT SHOWN ON THE DRAWINGS SHALL BE APPROVED BY THE STRUCTURAL CONSULTANT BEFORE CONSTRUCTION. GENERALLY JOINTS IN SLABS SHALL BE AT RIGHT ANGLES TO THE SPANS, AT MID-SPAN IF POSSIBLE AND BE CLEAR OF SUPPORTS AND POINT LOADS.
   - 3.6. INSERTS, FRAME-OUTS, SLEEVES, BRACKETS, CONDUITS AND FASTENING DEVICES, SHALL BE INSTALLED AS REQUIRED BY THE DRAWINGS AND SPECIFICATIONS IN A MANNER THAT SHALL NOT IMPAIR THE STRUCTURAL STRENGTH OF THE SYSTEM, BE SO INSTALLED THAT THEY SHALL NOT REQUIRE THE CUTTING, BENDING, OR DISPLACEMENT OF THE REINFORCING OTHER THAN AS SHOWN ON THE TYPICAL DETAILS.
   - 3.7. ELECTRICAL CONDUIT SHALL NOT PASS THROUGH A COLUMN, SHALL NOT BE LARGER IN OUTSIDE DIAMETER THAN 1/3 SLAB THICKNESS OR WALL OR BEAM IN WHICH IT IS EMBEDDED , SHALL NOT BE SPACED CLOSER THAN 3 DIAMETERS ON CENTRE UNLESS APPROVED AND HAVE A MINIMUM CONCRETE COVER OF 25 mm (1") AND UNLESS SPECIFICALLY PERMITTED OTHERWISE, SHALL NOT RUN HORIZONTALLY IN A CONCRETE WALL.
   - 3.8. OPENINGS AND DRIVEN FASTENERS REQUIRED IN THE CONCRETE AFTER THE CONCRETE IS PLACED SHALL BE APPROVED BY THE STRUCTURAL CONSULTANT BEFORE PROCEEDING.
   - 3.9. FINISHING, REFER TO ARCHITECTURAL DRAWINGS AND SPECIFICATIONS FOR REQUIRED FINISH TO EXPOSED CONCRETE. ALL HONEYCOMBING SHALL BE CUT OUT AND FILLED. FLOOR FINISHES SHALL BE AS REQUIRED BY THE ARCHITECTURAL DRAWINGS AND SPECIFICATIONS AND SHALL CONFORM TO CSA STANDARD A23.1 (CLASS A CONVENTIONAL SMOOTH CLASSIFICATION).
   - 3.10. TOLERANCES FOR PLACING STRUCTURAL CONCRETE, REINFORCING STEEL, CAST-IN HARDWARE AND FOR FLOOR AND ROOF FINISHES SHALL BE AS SPECIFIED IN CSA STANDARD A23.1.
   - 3.11. MINIMUM REINFORCING FOR ANY CONCRETE WALL TO BE AS SHOWN ON TYPICAL DETAIL FOR CONCRETE WALLS.
   - 3.12. MINIMUM REINFORCING FOR ANY SUSPENDED SLAB SHALL BE TEMPERATURE BARS BOTTOM EACH WAY PLUS 10M @ 400 (16") DOWELS 600x600 (2'-0" x 2'-0") TOP AROUND PERIMETER. REFER TO TYPICAL DETAIL OF ONE WAY SLABS.
4. QUALITY CONTROL
   - 4.1. FOR INSPECTION AND TESTING, SEE GENERAL NOTES AND/OR SPECIFICATION.

STRUCTURAL STEEL NOTES T-A03A

1. GENERAL
   - 1.1. STRUCTURAL STEEL DESIGN DETAILS AND CONNECTIONS SHALL CONFORM TO CSA STANDARD S16 AND SHALL BE DESIGNED BY A LICENSED PROFESSIONAL ENGINEER EXPERIENCED IN THIS TYPE OF WORK.
   - 1.2. REFER ALSO TO GENERAL NOTES, NOTES UNDER PLANS AND TO THE SPECIFICATION.
   - 1.3. WELDING SHALL CONFORM TO CSA STANDARD W59 AND BE PERFORMED BY A FABRICATOR CERTIFIED TO CSA W47.1.
   - 1.4. BEAM CONNECTIONS SHALL BE DESIGNED FOR A MINIMUM OF 50% OF THE BEAM SHEAR CAPACITY UNLESS OTHERWISE NOTED, AND IN NO CASE BE LESS THAN THE LOADS SHOWN ON OR IMPLIED BY THE DRAWINGS.
2. PRODUCTS
   - 2.1. STRUCTURAL STEEL SECTIONS SHALL CONFORM TO CSA-G40.20/G40.21
     - 2.1.1. WW SHAPES, S SHAPES, CHANNELS, ANGLES, PLATES AND RODS: - GRADE 300 W
     - 2.1.2. HSS SECTIONS: - GRADE 350W (CLASS C U/N)
     - 2.1.3. W SHAPES: - GRADE 350W
   - 2.2. BOLTS FOR CONNECTIONS TO CONFORM TO ASTM A325 UNLESS NOTED.
   - 2.3. ANCHOR RODS FOR BASE PLATES, BEARING PLATES AND WELD PLATES TO CONFORM TO ASTM F1554 UNLESS NOTED.
   - 2.4. NUTS AND WASHERS TO CONFORM TO ASTM A563 AND ASTM F436.
   - 2.5. SHEAR STUDS WHERE REQUIRED TO CONFORM TO ASTM A108, WELDING TO CONFORM TO CSA W59.
   - 2.6. WELDING MATERIALS TO CONFORM TO CSA W48.
   - 2.7. PRIMER PAINT TO CONFORM TO CAN/CGSB- 1.40 OR CISC/CPMA 1 OR CISC/CPMA 2.
   - 2.8. HOT DIP GALVANIZING WITH A MINIMUM ZINC COATING OF 600g/sq.m UNLESS OTHERWISE SPECIFIED.
3. EXECUTION
   - 3.1. FABRICATION, HANDLING AND ERECTION TO CONFORM TO CAN/ CSA - S16.
   - 3.2. PROVIDE A MINIMUM OF 2-12 mm (1/2") DIAMETER BY 250 (10") LONG WALL ANCHORS FOR ALL BEAM AND JOIST WALL PLATES ON MASONRY, OR AN APPROVED EQUAL, UNLESS OTHERWISE NOTED.BEAMS AND JOIST SHOES TO BE WELDED TO BEARING PLATES.
   - 3.3. PROVIDE ADJUSTABLE ANCHORS TO ALL STEEL TO BE BUILT INTO, ABUTTED BY, OR FACED WITH MASONRY (REFER ALSO TO TYPICAL DETAILS IF SHOWN). SPACING OF ANCHORS TO BE:
     FOR VERTICAL SPACING .... 600 (24") MAX. CENTRES.
     FOR HORIZONTAL SPACING .... 10 TIMES WALL THICKNESS* (MAX. 2000 (6'-8") CENTRES)
     (* NOTE, USE BACK-UP WYTHE THICKNESS ONLY, FOR CAVITY WALLS.)
   - 3.4. WHERE STEEL PROVIDES LATERAL BRACING ONLY TO MASONRY (I.E. DOES NOT SUPPORT MASONRY) ANCHORS SHALL PERMIT DIFFERENTIAL VERTICAL MOVEMENT BETWEEN STRUCTURAL MEMBERS AND MASONRY.
   - 3.5. CLEAN, PREPARE SURFACES AND SHOP PRIME STRUCTURAL STEEL WITH ONE COAT OF SPECIFIED PRIMER PAINT IN ACCORDANCE WITH CAN/CSA - S16, EXCEPT WHERE MEMBERS ARE TO BE ENCASED IN CONCRETE, OR TO RECEIVE SPRAY APPLIED FIRE PROOFING. FIELD " TOUCH-UP" BOLTS, WELDS, BURNED OR SCRAPED SURFACES AFTER ERECTION.
   - 3.6. PROVIDE ALL NECESSARY TEMPORARY BRACING TO KEEP STRUCTURE SAFE AND PLUMB. BRACING SHOWN ON STRUCTURAL DRAWINGS IS PERMANENT FOR FINISHED BUILDING ONLY.
   - 3.7. CO-ORDINATE WITH MECHANICAL AND ELECTRICAL CONSULTANTS AND SUB-TRADES WHOSE WORK MAY EFFECT DETAILING, FABRICATION AND ERECTION OF THE STEEL STRUCTURE.
   - 3.8. TOLERANCES: VARIATION FROM PLUMB AND LEVEL EXTERIOR COLUMNS, COLUMNS AT ELEVATOR SHAFTS, AND SPANDREL BEAMS INCLUDING ANGLES .... 1:1000 MAX. 25 mm (1/8" IN 10'-0" MAX. 1")
     OTHER PIECES .... 1:500 (1/4" IN 10'-0")
   - 3.9. NO HOLES OTHER THAN THOSE SHOWN ON REVIEWED SHOP DRAWINGS SHALL BE MADE IN ANY STEEL MEMBER WITHOUT WRITTEN PERMISSION OF THE STRUCTURAL CONSULTANT.
4. QUALITY CONTROL
   - 4.1. SEE GENERAL NOTES, NOTES UNDER PLANS, AND/OR SPECIFICATION FOR INSPECTION AND TESTING REQUIREMENTS.

LINTEL NOTES T-A06

UNLESS OTHERWISE SHOWN OR NOTED ON THE STRUCTURAL DRAWINGS, PROVIDE LINTELS OVER ALL OPENINGS IN MASONRY WALLS, AS FOLLOWS:-

1. FOR OPENINGS UP TO 1200 mm (4'-0") CLEAR;
   - 1.1. ONE ANGLE 90 x 90 x 6 (3 1/2" x 3 1/2" x 1/4") FOR EACH 100mm (4") OF WALL THICKNESS OR PORTION THEREOF.
     OR
   - 1.2. 200mm (8") DEEP MASONRY LINTEL BLOCK REINFORCED WITH 1-10M BOTTOM FOR EACH 100mm (4") OF WALL THICKNESS OR PORTION THEREOF.
2. FOR OPENINGS FROM 1200mm (4'-0") CLEAR TO 1800mm (6'-0") CLEAR;
   - 2.1. ONE ANGLE 125 x 90 x 8 LONG LEG VERTICAL (5"x 3 1/2" x 5/16") FOR EACH 100mm (4") OF WALL THICKNESS OR PORTION THEREOF.
     OR
   - 2.2. 200mm (8") DEEP MASONRY LINTEL BLOCK REINFORCED WITH 1-15M BOTTOM FOR EACH 100mm (4") OF WALL THICKNESS OR PORTION THEREOF.
3. ALL LINTELS TO BEAR 150mm (6") MINIMUM AT EACH END ON SOLID MASONRY, UNLESS SHOWN OTHERWISE.
4. PAIRS OF LINTEL ANGLES ARE TO BE BOLTED OR WELDED TOGETHER, PRIOR TO SHIPMENT, AT MAXIMUM 450mm (18") CENTRES.
5. MASONRY LINTEL BLOCKS MAY ONLY BE USED IN LOAD-BEARING WALLS WITH PERMISSION AND MUST BE FILLED WITH 20 MPa CONCRETE. MORTAR IS NOT ACCEPTABLE AND WILL BE REJECTED.
6. STEEL LINTELS ARE TO BE SUPPLIED BY STEEL CONTRACTOR BUT PLACED BY GENERAL CONTRACTOR OR MASONRY SUB- CONTRACTOR.
7. STEEL CONTRACTOR TO SUPPLY ALL NECESSARY DIRECTIONS REQUIRED FOR PLACING STEEL LINTELS.
8. WHILE EVERY EFFORT HAS BEEN MADE TO SHOW ON THE STRUCTURAL DRAWINGS EACH AND EVERY LINTEL OVER DOORS, MECHANICAL AND ELECTRICAL SERVICES, RECESSES AND POCKETS ETC., THROUGH LOAD-BEARING MASONRY WALLS, IT IS THE GENERAL CONTRACTOR'S RESPONSIBILITY TO CO-ORDINATE AND SUPPLY ALL LINTELS REQUIRED THROUGH ALL WALLS (INCLUDING NON-LOAD BEARING WALLS) THROUGHOUT THE PROJECT. UNLESS OTHERWISE DIRECTED, LINTELS SHALL CONFORM TO THE ABOVE REQUIREMENTS.
9. REFER ALSO TO TYPICAL DETAILS.

STANDARD ABBREVIATIONS T-A11

@	-At
ADJ	-Adjustable
AIFB	-Asphalt Impregnated Fibre Board
ALT	-Alternate
ARCH	-Architectural
A. ROD(A.R.)	-Anchor Rod
ASL	-Accumulated Snow Loading
B (BOT)	-Bottom
BEW	-Bottom Each Way
BLDG	-Building
BLL	-Bottom Lower Layer
BM	-Beam
BML	-Bottom Middle Layer
BNT	-Base NominalThickness
B.O.F.	-Bottom of Footing
BP	-Baseplate
BSMT	-Basement
BUL	-Bottom Upper Layer
C	-Standard Channel
CA	-Column Above
CANT	-Cantilever
C/C (o/c)	-Centre to Centre
CJ	-Control Joint
CL	-Centreline
COL	-Column
COMP	-Compressible
CONC	-Concrete
CONST	-Construction
CONST JT (CJT)	-Construction Joint
CONT (CONTIN)	-Continuous
C/W	-Complete With
D.FIR	-Douglas Fir
DET	-Detail
DIAG	-Diagonal
Ø (DIA)	-Diameter
DIM	-Dimension
DJ	-Double Joist
DL	-Dead Load
DO	-Ditto
DWG	-Drawing
DWL	-Dowel
DT	-Double Tee
E-W	-East-West
EA	-Each
EE	-Each End
EF	-Each Face
ELECT	-Electrical
ELEV (EL)	-Elevation / Elevator
EQ	-Equal
ES	-Each Side
EW	-Each Way
EXIST	-Existing
EXP. JT.	-Expansion Joint
EXT	-Exterior
FDN	-Foundation
FF	-Far Face
FIN	-Finished
FL	-Floor
FMC	-Full Moment Connection
FT	-Foot / Feet
FTG	-Footing
GA	-Gauge
GALV	-Galvanized
GEN	-General
H (HOR)	-Horizontal
HEF	-Horizontal Each Face
HIF	-Horizontal Inside Face
HOF	-Horizontal Outside Face
HSC	-Horizontally Slotted Connection
HSS	-Hollow Structural Section
IF	-Inside Face
INT	-Interior
INV	-Invert
JT	-Joint
kg	-Kilogram
kN.m	-Kilo Newton Metres
kN/m²	-Kilo Newton per Square Metre
kN/m	-Kilo Newton per Metre
kPa	-Kilo Pascals
L	-Angle
LB.	-Pounds
LG	-Long
LL	-Live Load / Lower Layer
LLH	-Long Leg Horizontal
LLV	-Long Leg Vertical
LSSJ	-Long Span Steel Joists
LVL	-Laminated Veneer Lumber
m	-Metre
MAX	-Maximum
MECH	-Mechanical
MEZZ	-Mezzanine
MIN	-Minimum
MISC	-Miscellaneous
ML	-Middle Layer
MLL	-Middle Lower Layer
mm	-Millimetre
MOM, (M)	-Moment
MPa	-Mega Pascals
MUL	-Middle Upper Layer
N	-Newton
N-S	-North-South
NF	-Near Face
NIC	-Not in Contract
No.(#)	-Number
NTS	-Not to Scale
OWSJ	-Open Web Steel Joist
Pa	-Pascal
PC	-Precast
PL	-Plate
PLF	-Pounds per Lineal Foot
PREL	-Preliminary
PROJ	-Projection
PSF	-Pounds per Square Foot
PSI	-Pounds per Square Inch
PSL	-Parallel Strand Lumber
PT	-Pressure Treated
R	-Reaction
RAD	-Radius
REF	-Reference
REINF	-Reinforcing
REQ'D	-Required
REV	-Revision/Revised
Rf	-Factored Vertical Reaction
R/W	-Reinforced With
S	-Standard Beam
SDF	-Step Down Footing
SDL	-Superimposed Dead Load
SECT	-Section
SL	-Slab
SQ	-Square
SOG	-Slab on Grade
S.P.F.	-Spruce/Pine/Fir
SPEC	-Specifications
ST	-Steel
STD	-Standard
STR	-Straight
STRUCT	-Structural
T	-Top
TEMP	-Temperature
Tf	-Factored Tension Force
TJ	-Tie Joist
TLL	-Top Lower Layer
TMf	-Factored Torsional Moment
TML	-Top Middle Layer
TOD, T/D	-Top of Deck
T.O.F.	-Top of Footing
TOS, T/S	-Top of Slab
TOST	-Top of Steel
TSF	-Tons per Square Foot
TUL	-Top Upper Layer
TYP	-Typical
UL	-Upper Layer
U/N	-Unless Noted
U.N.O.	-Unless Noted Otherwise
U/S	-Underside
USD	-Underside of Deck
V (VERT)	-Vertical
VBF	-Vertically Braced Framing
VEF	-Vertical Each Face
VIF	-Vertical Inside Face
VOF	-Vertical Outside Face
VSC	-Vertically Slotted Connection
W	-Wide Flange Beam
WP	-Wall Plate
WWF	-Welded WideFlange Beam
WWF (WWM)	-Welded Wire Fabric/ Mesh

STANDARD LAP ABBREVIATIONS

CLS	-Compression Lap Splice
CDL	-Compression Development Length
HEL	-Hook Embedment Length
TLS	-Tension Lap Splice
TDL	-Tension Development Length

SHORING NOTES T-A13

1.0 DESIGN
- 1.1 LATERAL EARTH PRESSURE EXERTED ON SHORING SYSTEM: P = K (ð H+q)
  WHERE: K = .25 (PILES) .3 (TIE BACKS)
  ð = 21.0kN/m³
  q = 12.0kN/m²
  H = DEPTH OF CUT
- 1.2 ALSO SEE SOILS REPORT #_____________ DATED __________
- 1.3 TIE-BACK DESIGN BASED ON AN ANCHORAGE COHEFFICIENT Kf=1.5 AND THE CANADIAN FOUNDATION REINFORCEMENT MANUAL 3rd EDITION.
- 1.4 DESIGN COMPLIES WITH THE LATEST EDITIONS OF THE ONTARIO BUILDING CODE AND THE ONTARIO HIGHWAY BRIDGE DESIGN CODE.

2.0 MATERIALS
- 2.1 STRUCTURAL STEEL SHALL BE NEW OR SOUND USED MATERIAL CONFORMING TO C.S.A. G40.21, GRADE 300.
- 2.2 ALTERNATIVE SECTIONS OR GRADES OF EQUIVALENT STRENGTH, MAY BE SUBSTITUTED SUBJECT TO APPROVAL OF ENGINEER
- 2.3 CONCRETE STRENGTHS TO BE AS FOLLOWS:
  - a) PILE TOES ___________________________20 MPa
  - b) CANTILEVERED PILE TOES___________________20 MPa
  - c) BACKFILL TO GRADE______________________.4 MPa
  - d) FREE ZONES____________________________BENTONITE GROUT
- 2.4 TIMBER LAGGING TO BE 75 mm MIN. (TRUE THICKNESS) HARDWOOD UNLESS NOTED OTHERWISE.
- 2.5 WELDING SHALL CONFORM TO C.S.A. W59 AND BE PERFORMED BY QUALIFIED WELDERS.

3.0 PROCEDURES
- 3.1 DRILL HOLES TO SIZE AND DEPTHS INDICATED. INSTALL PILES PLUMB AND TO LINE.
- 3.2 POUR SPECIFIED CONCRETE TOES AND BACKFILL TO GRADE.
- 3.3 EXCAVATE IN 1200mm MAX. LIFTS INSTALLING LAGGING AS EXCAVATION PROCEEDS. CUT SOIL FACES NEATLY TO ENSURE A TIGHT FIT FOR LAGGING. WEDGE AT PILES AS REQUIRED. FILL VOIDS BEHIND LAGGING WITH GRANULAR EXCAVATED FILL RAMMED IN PLACE.
- 3.4 WHEN EXCAVATION REACHES 300mm MAX. BELOW TIE-BACK ELEVATIONS NOTED, DRILL AND INSTALL TIE-BACKS. LOCK-IN LOAD BEFORE EXCAVATING BELOW.
- 3.5 PROVIDE 2 TEST TIE-BACKS. TEST TO BE IN ACCORDANCE WITH THE LATEST EDITION OF THE CANADIAN FOUNDATION ENGINEERING MANUAL. TEST ANCHORS TO TWICE THE DESIGN LOAD NOTED.
- 3.6 PROOF TEST REMAINING TIE-BACKS TO 1.3 TIMES DESIGN LOAD NOTED. HOLD LOAD FOR 10 MINUTES. IF NO APPRECIABLE CREEP OCCURS, REDUCE LOAD TO 1 TIMES DESIGN LOAD AND LOCK-IN.

4.0 GENERAL CONTRACTOR
- 4.1 GENERAL CONTRACTOR TO PROVIDE THE FOLLOWING:
  - a) CHECK ALL DIMENSIONS WITH ARCH.& STRUCT. DWGS. PRIOR TO PILE INSTALLATION.
  - b) LAYOUT STAKES FOR ALL PILES.
  - c) ADEQUATE PROTECTION TO SHORING SYSTEM AGAINST THE EFFECTS OF WEATHER, WATER OR FREEZING.
  - d) MONITORING OF ALL PILES FOR ANY LATERAL MOVEMENTS. REPORT ANY MOVEMENT GREATER THAN 6mm IMMEDIATELY TO ENGINEER.
  - e) LOCATE AND IDENTIFY ALL BELOW AND ABOVE GROUND SERVICES OR UTILITIES THAT MAY INTERFERE WITH PILE INSTALLATION. REMOVE OR RELOCATE AS NECESSARY.
  - f) DEWATER SITE AS NECESSARY.

COLD WEATHER CONCRETING T-A14

FOR FORECASTED AIR TEMPERATURES AT OR BELOW 5°C

1. ALL MATERIALS AND EQUIPMENT NEEDED FOR HEATED ENCLOSURE AND CONCRETE CURING PROTECTION SHALL BE ON HAND AND READY FOR USE BEFORE CONCRETE PLACEMENT IS STARTED.
2. FORMS AND/OR STEEL DECK IS TO BE HEATED TO A MINIMUM OF 5°C. CONCRETE SHALL NOT BE PLACED ON ANY SURFACE BELOW 5°C.
3. FORMS AND/OR STEEL DECK MUST BE FREE OF SNOW AND ICE PRIOR TO POURING CONCRETE. THE USE OF ANY DE-ICING CHEMICAL IS NOT PERMITTED ON THE FORMWORK OR STEEL DECK.
4. FOR SLABS LESS THAN 1000mm THICK THE MINIMUM CONCRETE TEMPERATURE AT TIME OF POURING IS TO BE 10°C. FOR SLABS GREATER THAN 1000mm THICK THE MINIMUM CONCRETE TEMPERATURE AT TIME OF POURING IS TO BE 5°C.
5. CONCRETE TEMPERATURE SHALL BE KEPT AT A MINIMUM OF 10°C FOR AT LEAST 3 DAYS OR UNTIL THE CONCRETE REACHES 40% OF THE SPECIFIED STRENGTH. ADDITIONAL CURING MAY BE REQUIRED IN WHICH CONCRETE SHALL BE KEPT AT A MINIMUM OF 10°C FOR AT LEAST 7 DAYS OR UNTIL THE CONCRETE REACHES 70% OF THE SPECIFIED STRENGTH.
6. IF THE FORECASTED AIR TEMPERATURE IS TO FALL BELOW 0°C, THE TOP OF SLAB SHALL BE PROTECTED FROM FREEZING. TOP OF SLAB PROTECTION SHALL BE PLACED AS TO NOT AFFECT THE FINISH OF THE SLAB.
7. IF THE FORECASTED AIR TEMPERATURE IS TO FALL BELOW 0°C WITH REASONABLY HIGH WINDS THE CONCRETE MUST BE PROTECTED FROM FLASH FREEZING DURING PLACEMENT AND FINISHING. THIS PROTECTION MUST REMAIN IN PLACE UNTIL TOP OF SLAB PROTECTION HAS BEEN INSTALLED AS PER NOTE #6.

* SEE ALSO CSA A23.1-09/A23.2-09 CLAUSES 7.4.1.5 AND 7.4.2 FOR ADDITIONAL INFORMATION WITH RESPECT TO COLD WEATHER CONCRETING AND CURING.

FLAT SLAB WITH DROP PANELS T-C02A

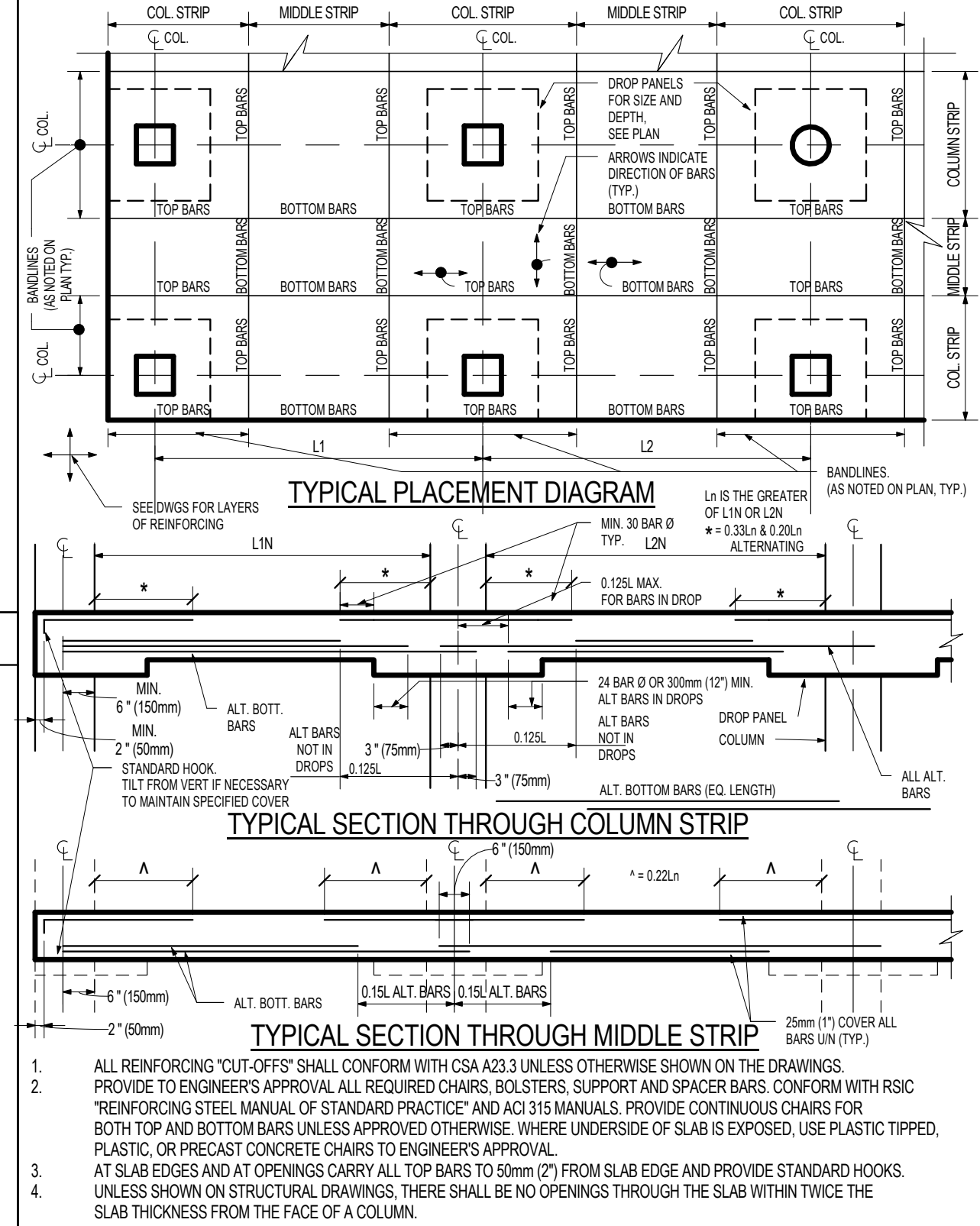
TYPICAL PLACEMENT DIAGRAM
TYPICAL SECTION THROUGH COLUMN STRIP
TYPICAL SECTION THROUGH MIDDLE STRIP

FLAT SLAB WITH DROP PANELS AND CAPITALS T-C02B

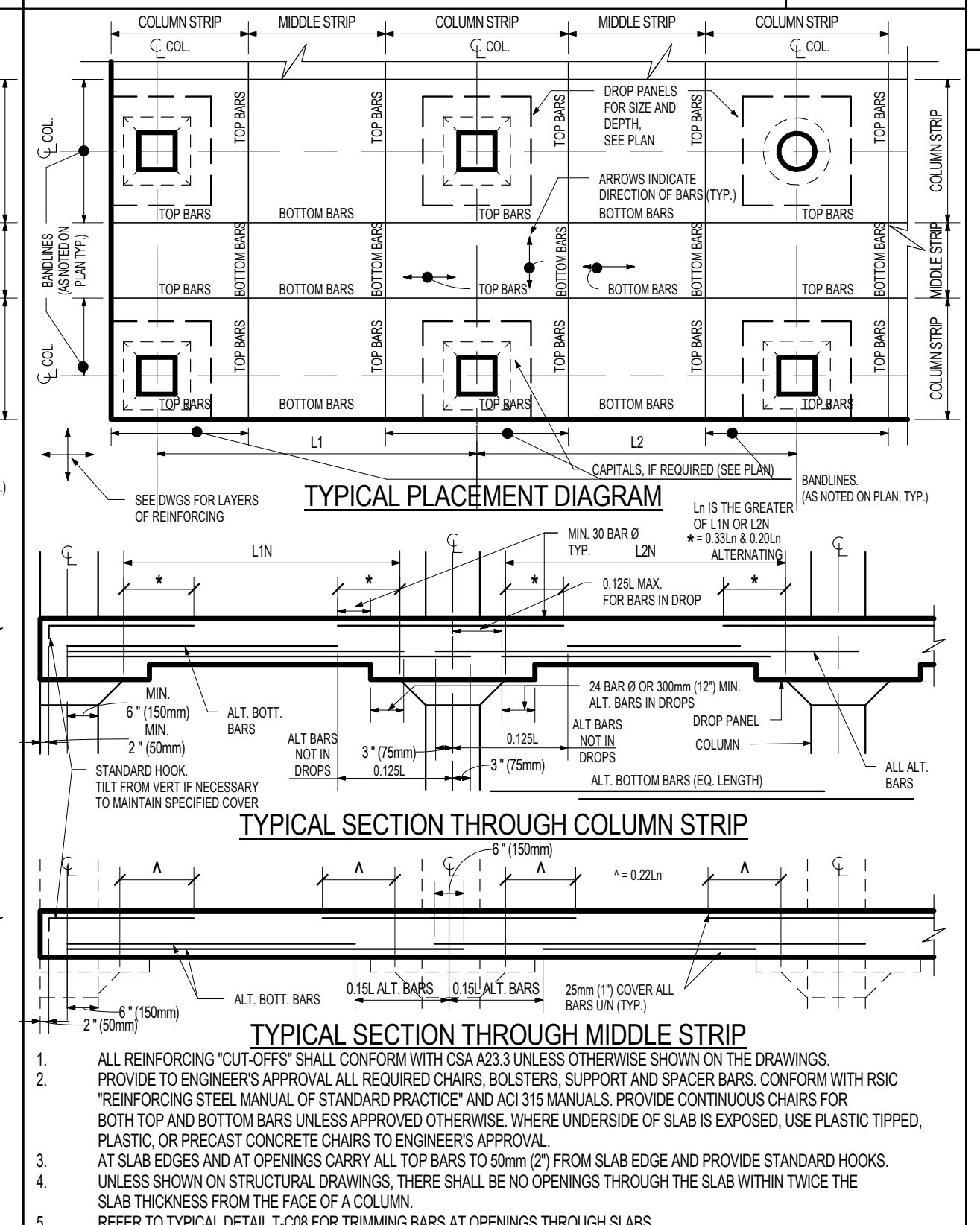
TYPICAL PLACEMENT DIAGRAM
TYPICAL SECTION THROUGH COLUMN STRIP
TYPICAL SECTION THROUGH MIDDLE STRIP

PLACEMENT OF TOP STEEL OVER COLUMNS IN FLAT SLABS T-C02C

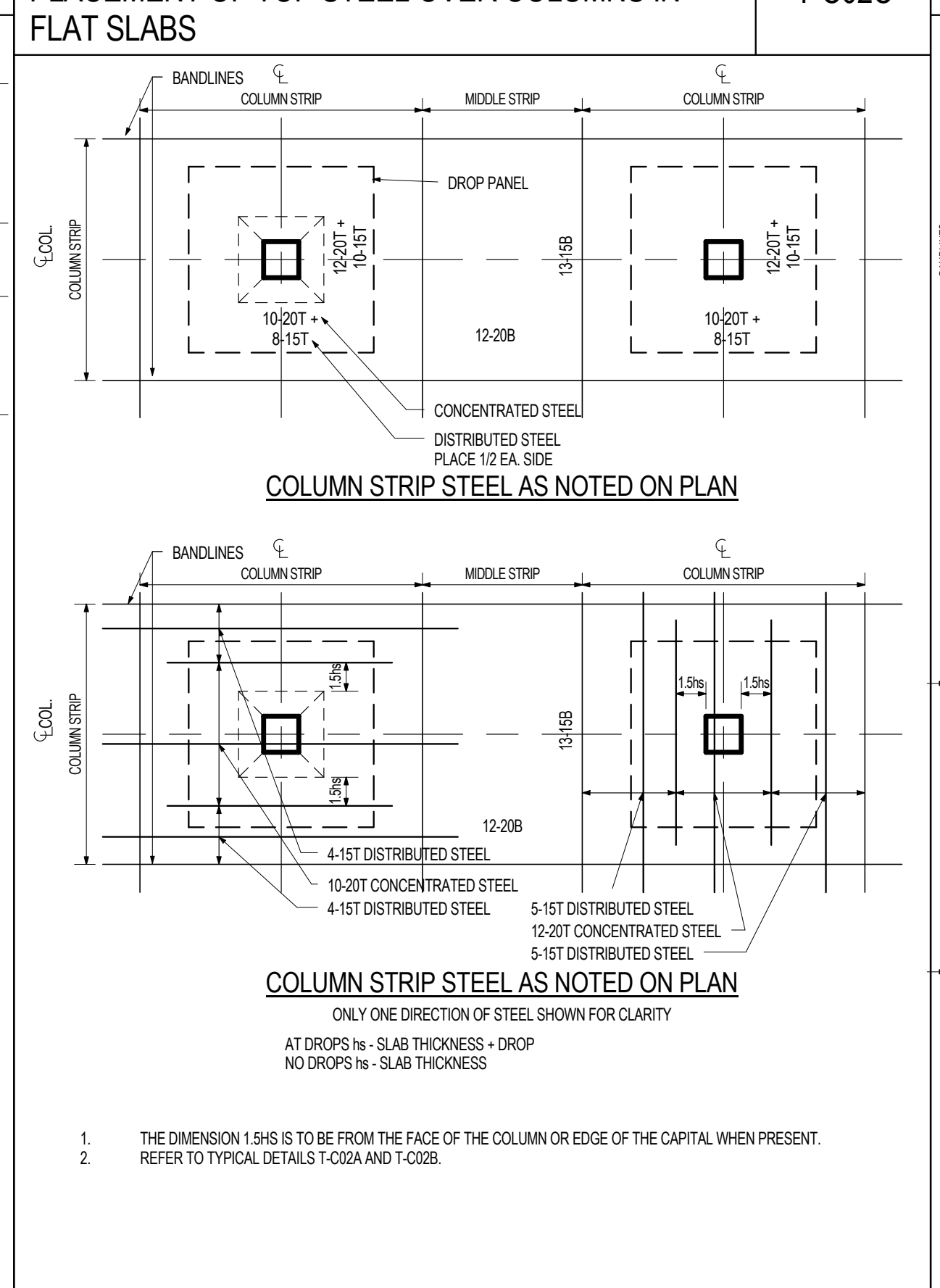
COLUMN STRIP STEEL AS NOTED ON PLAN
COLUMN STRIP STEEL AS NOTED ON PLAN

FLAT SLAB WITHOUT DROP PANELS T-C03

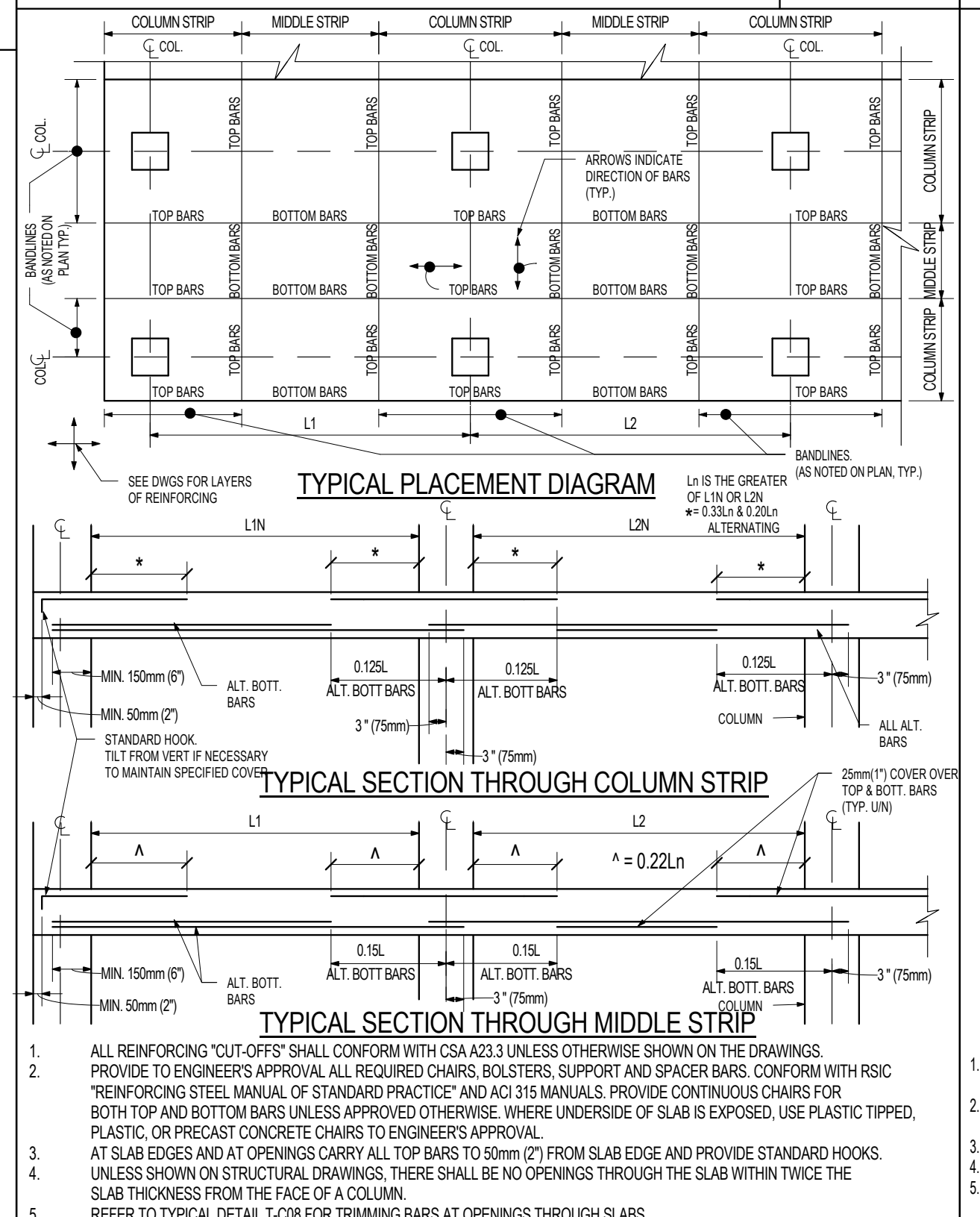
TYPICAL PLACEMENT DIAGRAM
TYPICAL SECTION THROUGH COLUMN STRIP
TYPICAL SECTION THROUGH MIDDLE STRIP

TYPICAL DETAIL OF CONCRETE COLUMN T-C04

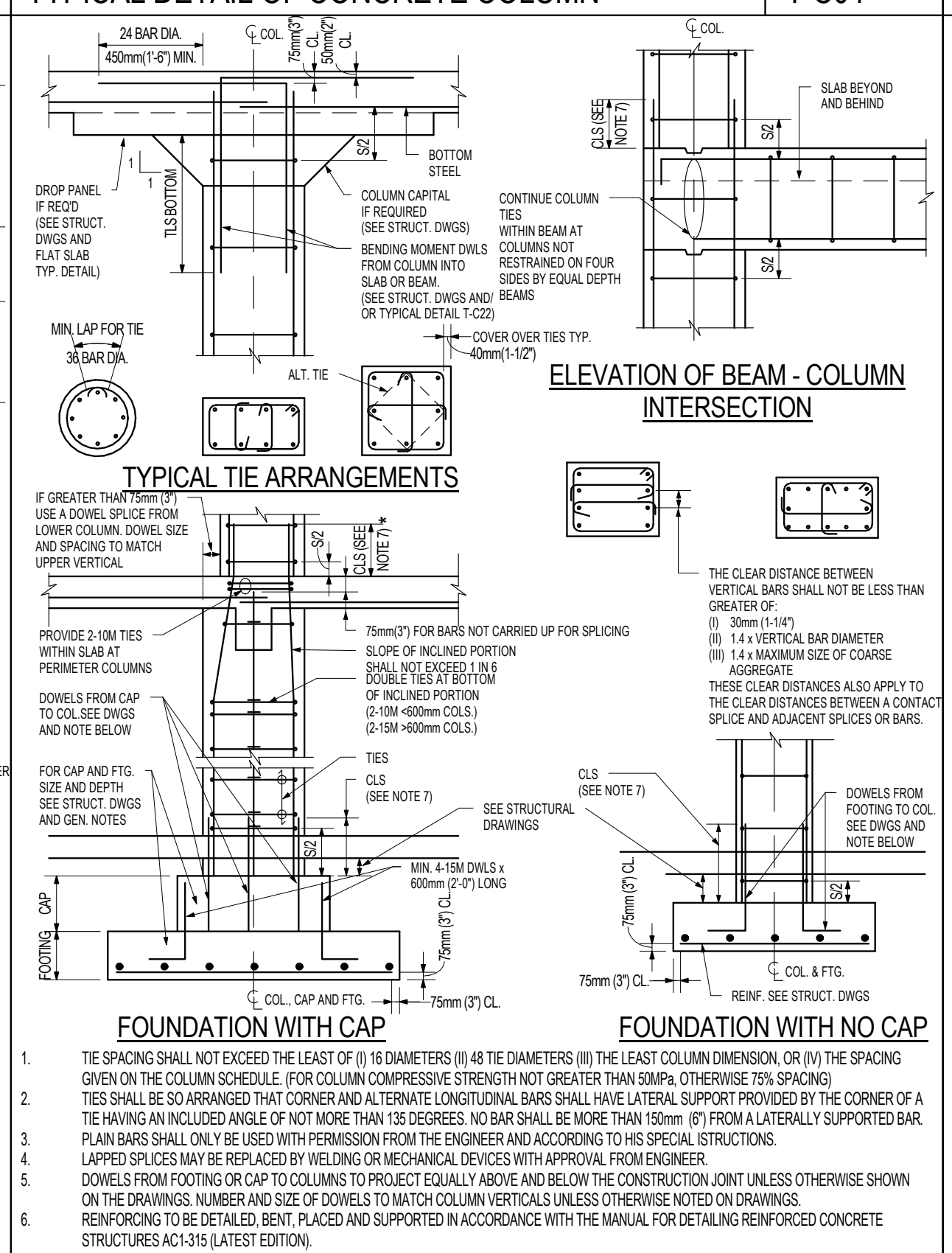

CONCRETE WALLS T-C05

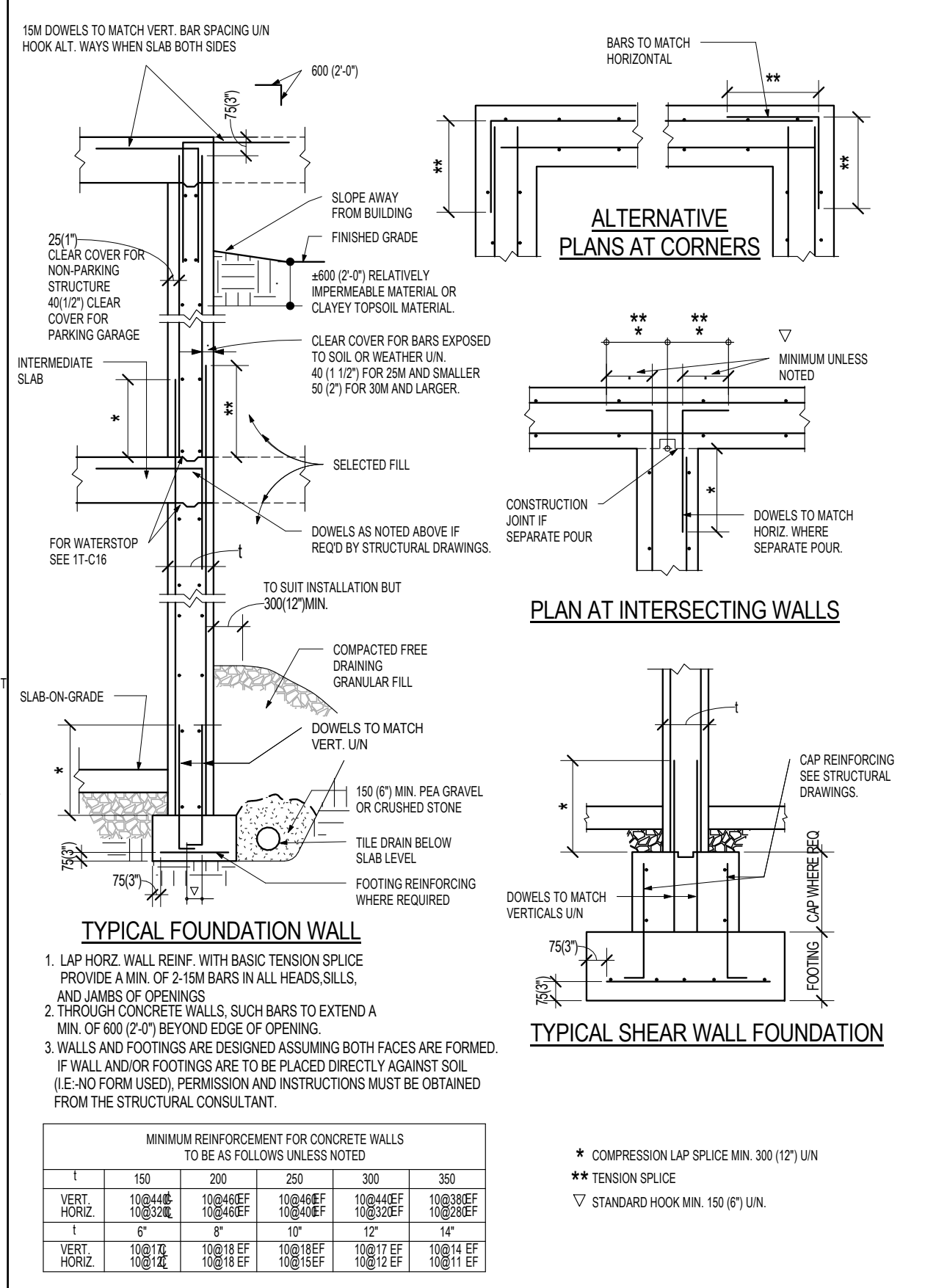
ALTERNATIVE PLANS AT CORNERS
PLAN AT INTERSECTING WALLS
TYPICAL FOUNDATION WALL
TYPICAL SHEAR WALL FOUNDATION

CONCRETE WALLS WITH EXCAVATION SHORING T-C05A

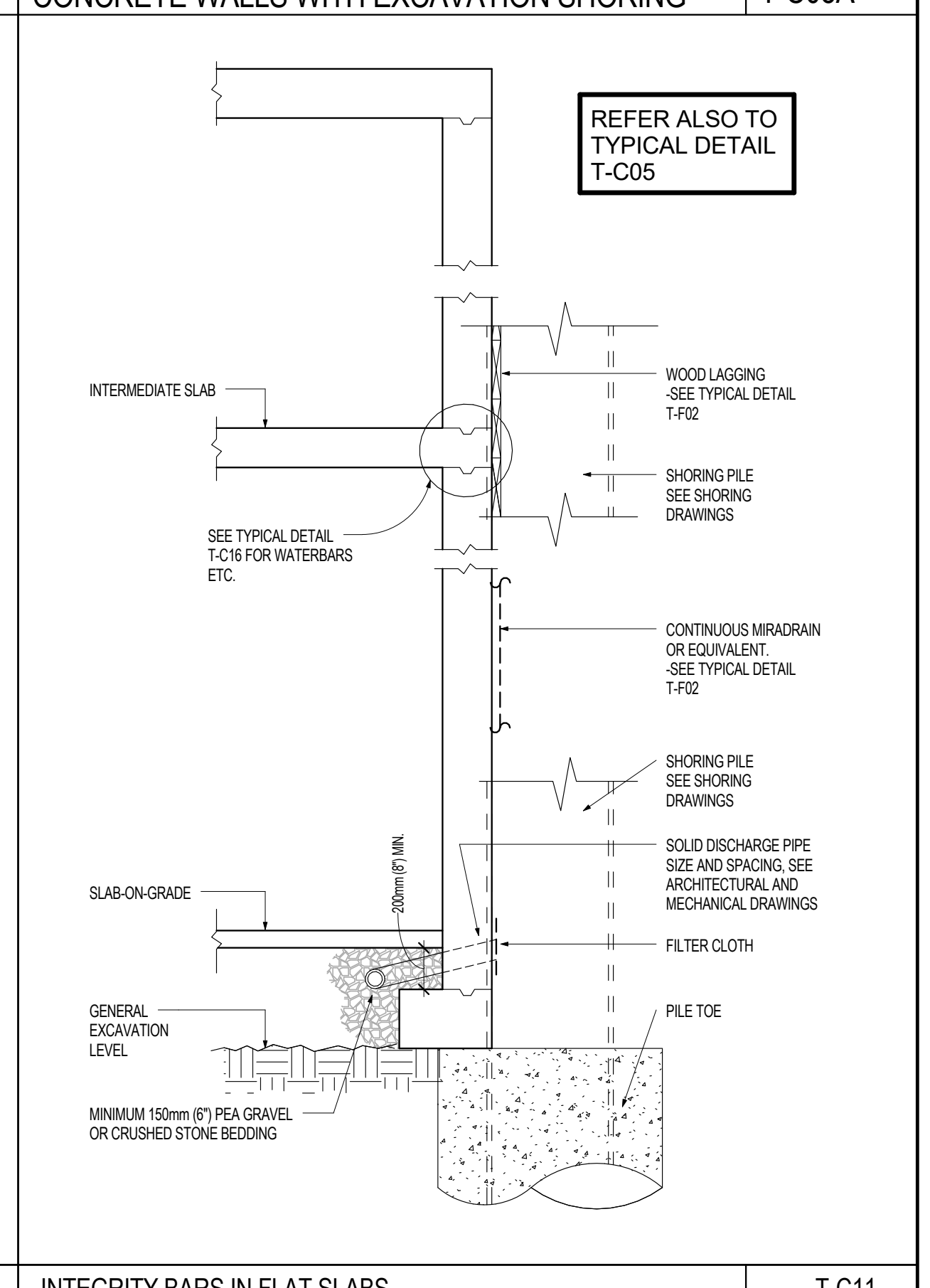
REFER ALSO TO TYPICAL DETAIL T-C05
WOOD LAGGING SEE TYPICAL DETAIL
SHORING PILE SEE SHORING DRAWINGS
CONTINUOUS MIRADRAIN OR EQUIVALENT. SEE TYPICAL DETAIL
SHORING PILE SEE SHORING DRAWINGS
SOLID DISCHARGE PIPE SIZE AND SPACING, SEE ARCHITECTURAL AND MECHANICAL DRAWINGS
FILTER CLOTH
SLAB-ON-GRADE
PILE TOE

JOINTS IN CONCRETE MEMBERS T-C06

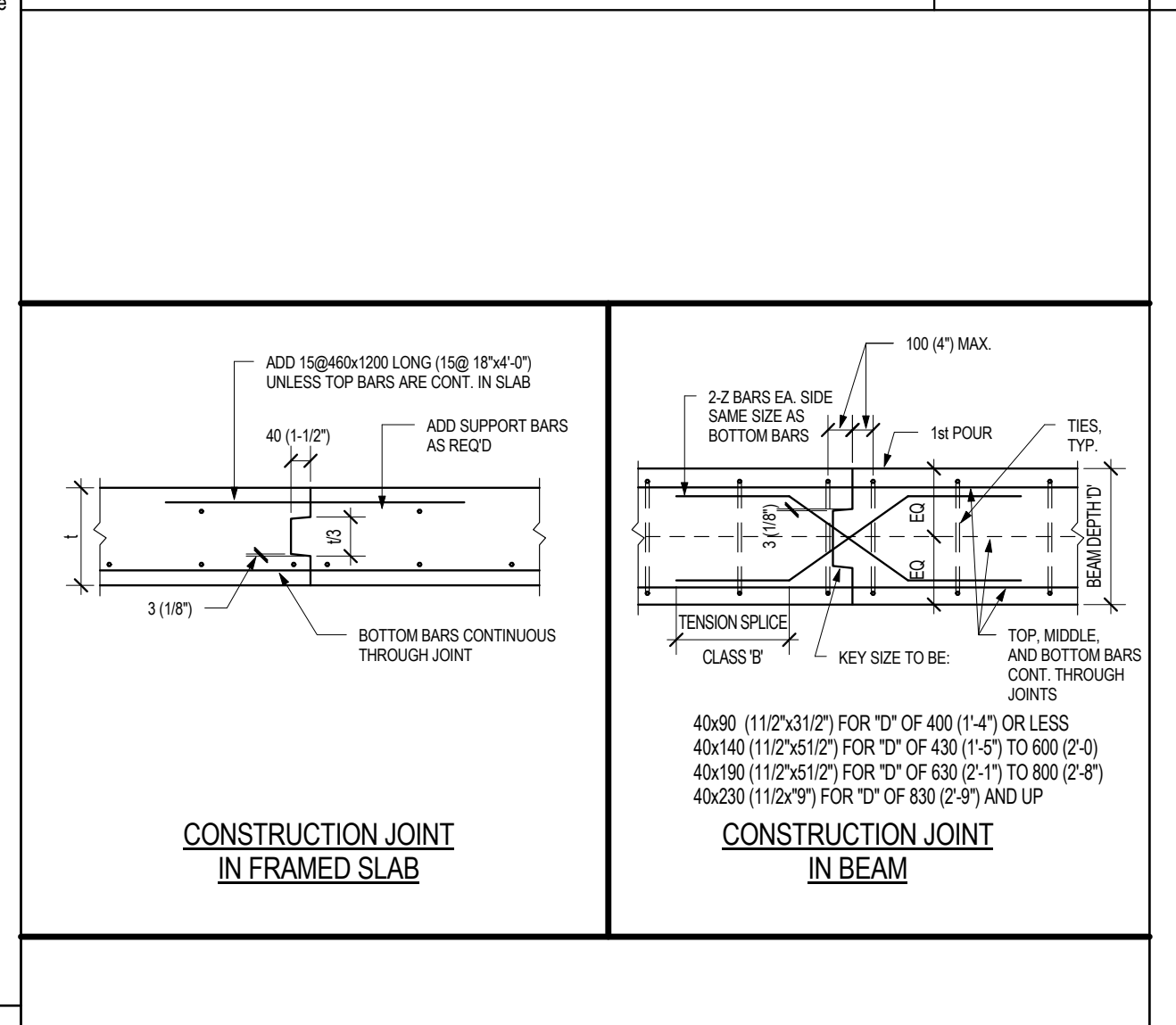
CONSTRUCTION JOINT IN FRAMED SLAB
CONSTRUCTION JOINT IN BEAM
40x140 (11/2"x51/2") FOR "D" OF 430 (1'-5") TO 600 (2'-0)
40x190 (11/2"x51/2") FOR "D" OF 630 (2'-1") TO 800 (2'-8")
40x230 (11/2x"9") FOR "D" OF 830 (2'-9") AND UP

1. CONSTRUCTION JOINTS SHALL BE MADE AND LOCATED SO AS NOT TO IMPAIR THE STRENGTH OF THE STRUCTURE. IF JOINTS ARE NOT SPECIFICALLY LOCATED AND/OR THERE IS ANY DOUBT CONCERNING THEIR LOCATION, THE CONTRACTOR MUST CONSULT WITH THE STRUCTURAL CONSULTANT.
2. WHERE A CONSTRUCTION JOINT IS TO BE MADE, THE SURFACE OF THE SET CONCRETE IS TO BE THOROUGHLY CLEANED OF ALL FOREIGN MATTER AND LAITANCE, SATURATED WITH WATER AND BE LEFT IN A DAMP CONDITION WITH NO FREE WATER ON THE SURFACE IMMEDIATELY BEFORE PLACING ADJACENT CONCRETE.
3. REINFORCING PROJECTING THROUGH A JOINT SHALL BE THOROUGHLY CLEANED OF LOOSE FLAKY RUST, MUD, OIL, DRIED CONCRETE OR OTHER COATINGS WHICH WOULD DESTROY OR REDUCE BOND.
4. FOR FRAMED SLABS AND BEAMS, FORMS & SHORES TO REMAIN IN PLACE ON BOTH SIDES OF JOINT UNTIL CONCRETE IN LAST POUR HAS ACHIEVED ITS SPECIFIED DESIGN STRENGTH.
5. FOR JOINTS IN SLAB-ON-GRADE SEE SEPARATE TYPICAL DETAIL.

TYPICAL DETAIL OF CONCRETE CURBS ON SLABS T-C07

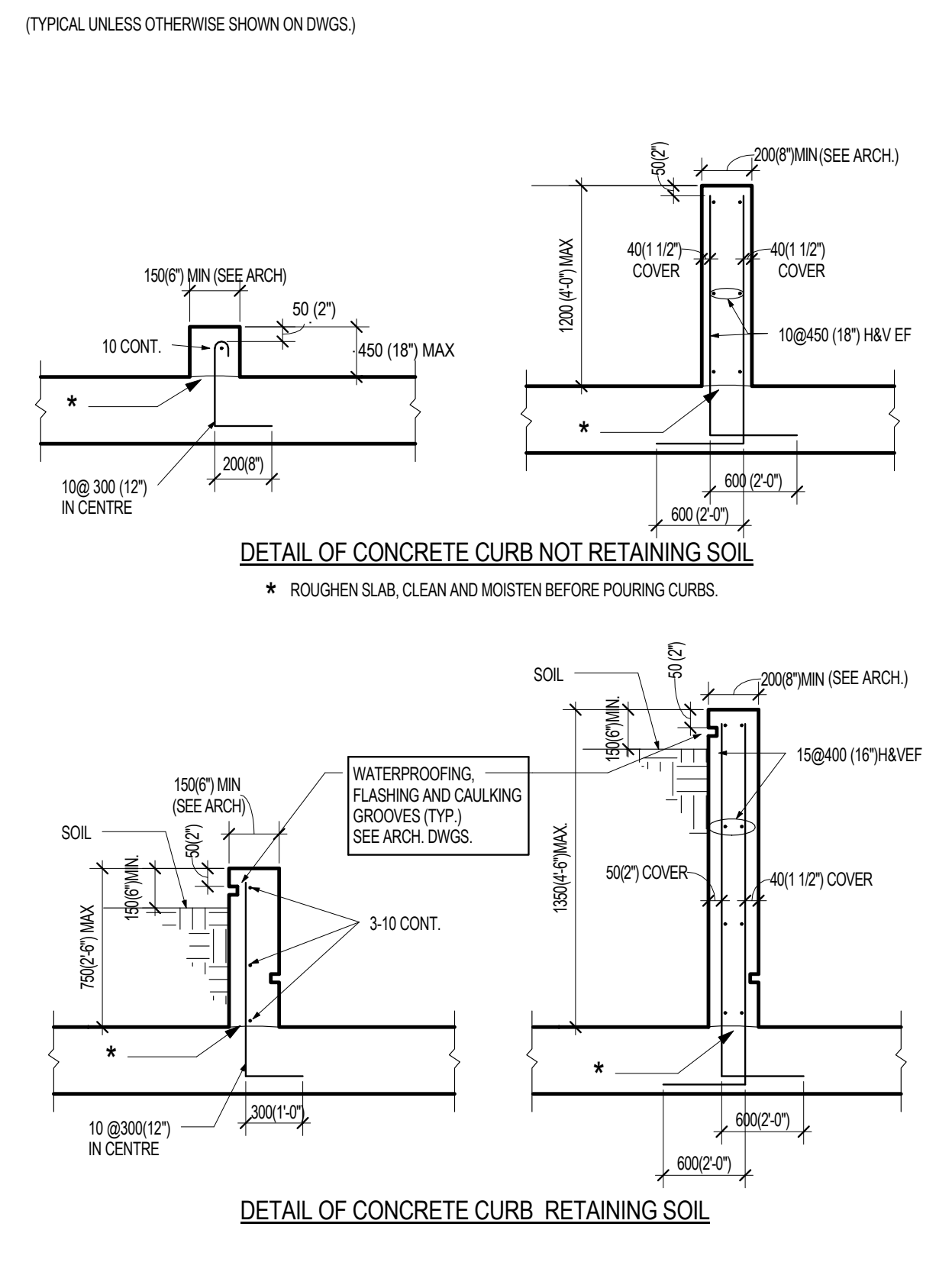
(TYPICAL UNLESS OTHERWISE SHOWN ON DWGS.)
DETAIL OF CONCRETE CURB NOT RETAINING SOIL
DETAIL OF CONCRETE CURB RETAINING SOIL

TYPICAL TRIMMING TO OPENINGS IN SLABS T-C08

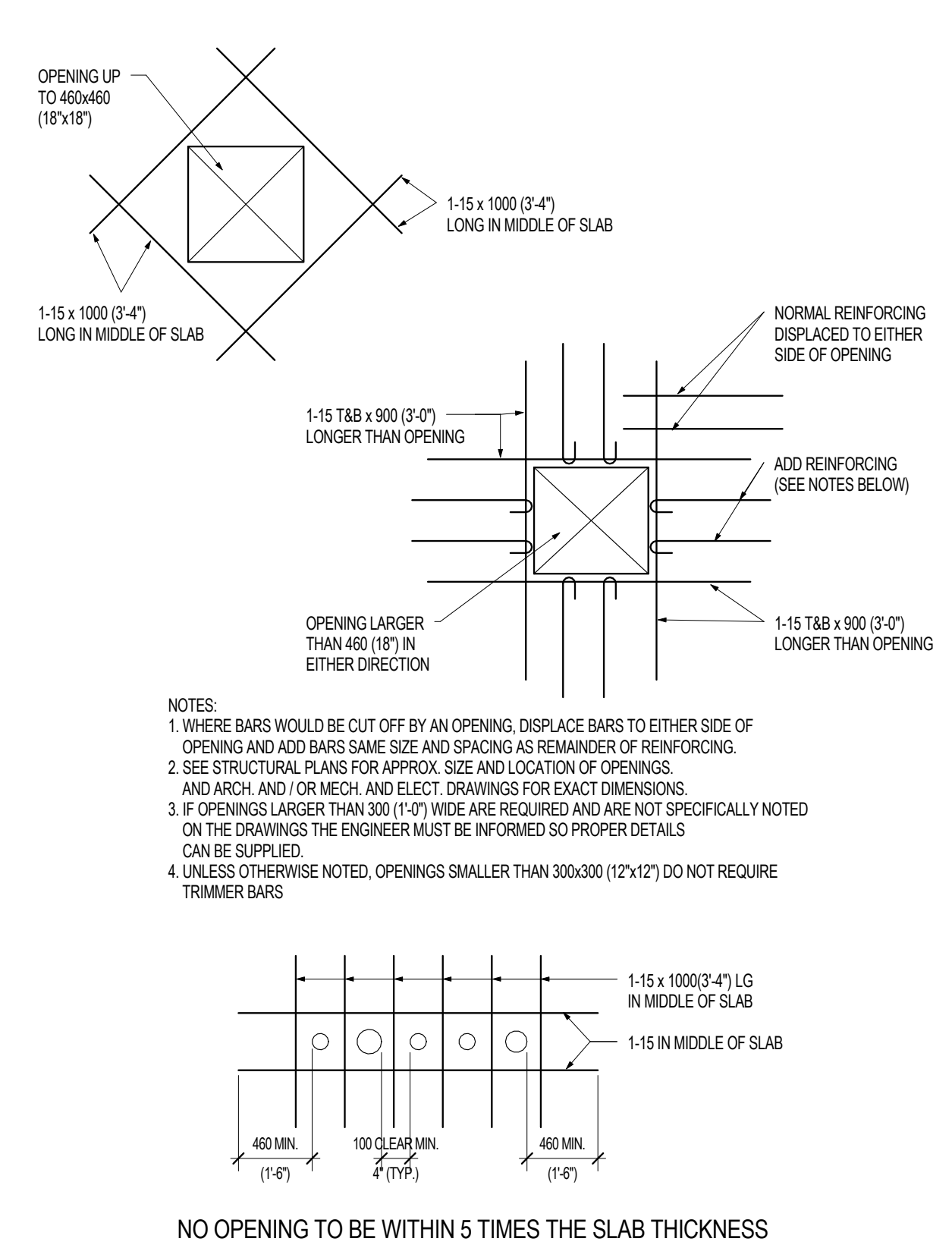
NO OPENING TO BE WITHIN 5 TIMES THE SLAB THICKNESS FROM A COLUMN WITHOUT PRIOR ENGINEER CONSENT.

SLAB ON GRADE DETAILS T-C09

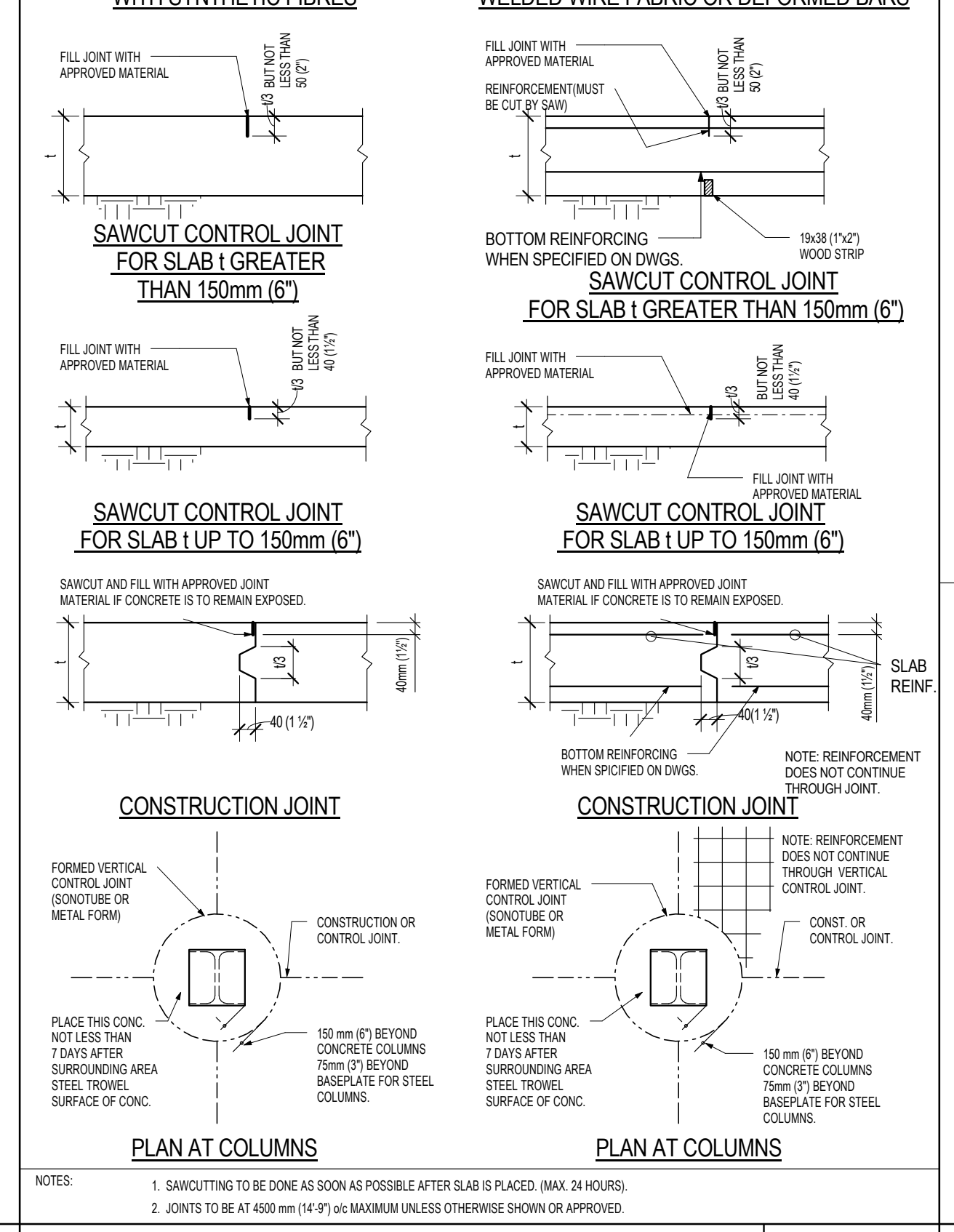
SLAB ON GRADE REINFORCED WITH SYNTHETIC FIBRES
SLAB ON GRADE REINFORCED WITH WELDED WIRE FABRIC OR DEFORMED BARS
SAWCUT CONTROL JOINT FOR SLAB I GREATER THAN 150mm (6")
SAWCUT CONTROL JOINT FOR SLAB I GREATER THAN 150mm (6")
SAWCUT CONTROL JOINT FOR SLAB I UP TO 150mm (6")
SAWCUT CONTROL JOINT FOR SLAB I UP TO 150mm (6")
CONSTRUCTION JOINT
VERTICAL CONTROL JOINT
PLAN AT COLUMNS
PLAN AT COLUMNS

THICKENING OF SLAB ON GRADE T-C09A

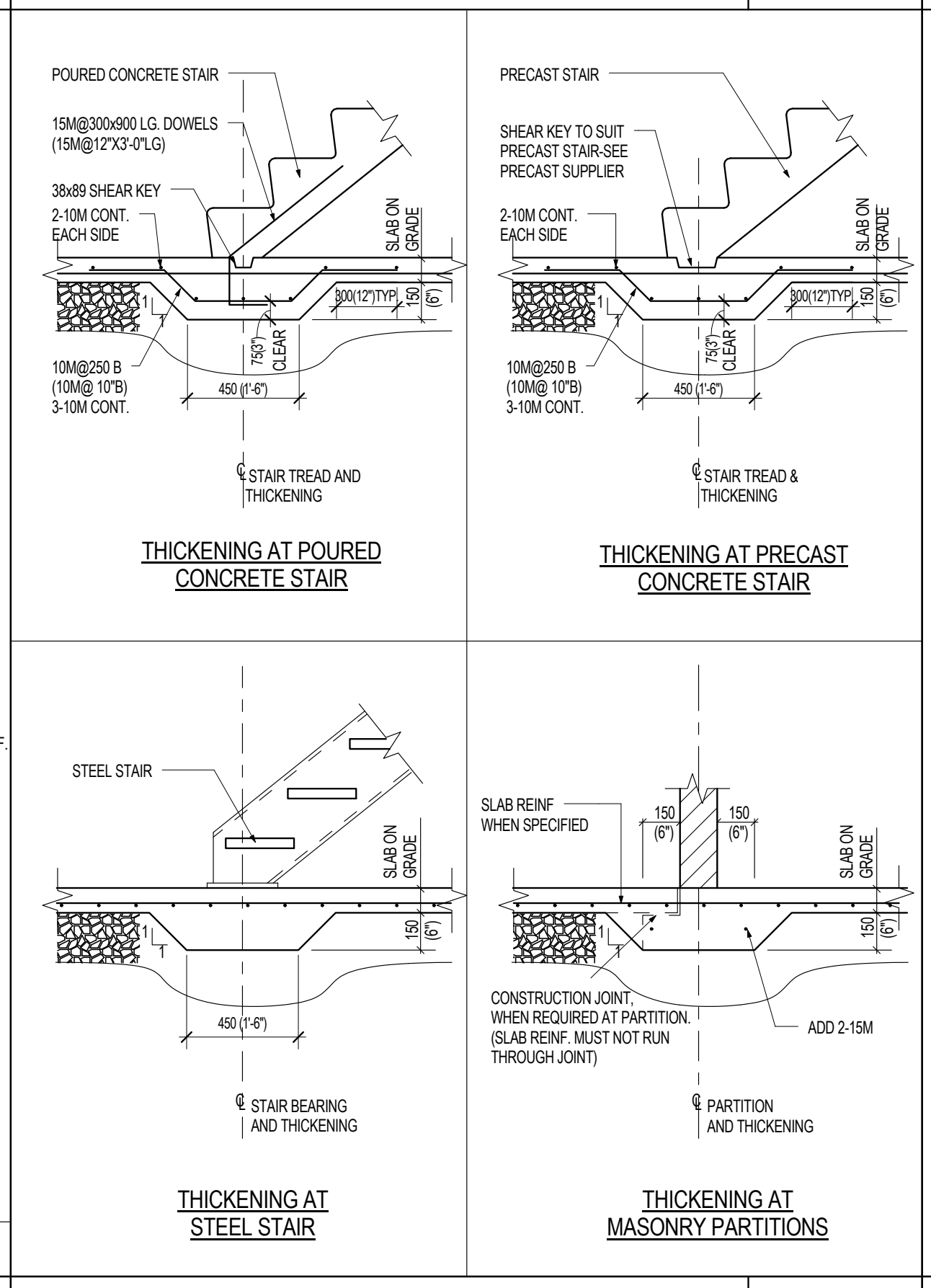
THICKENING AT POURED CONCRETE STAIR
THICKENING AT PRECAST CONCRETE STAIR
THICKENING AT STEEL STAIR
THICKENING AT MASONRY PARTITIONS

TYPICAL CRANE OPENING T-C10

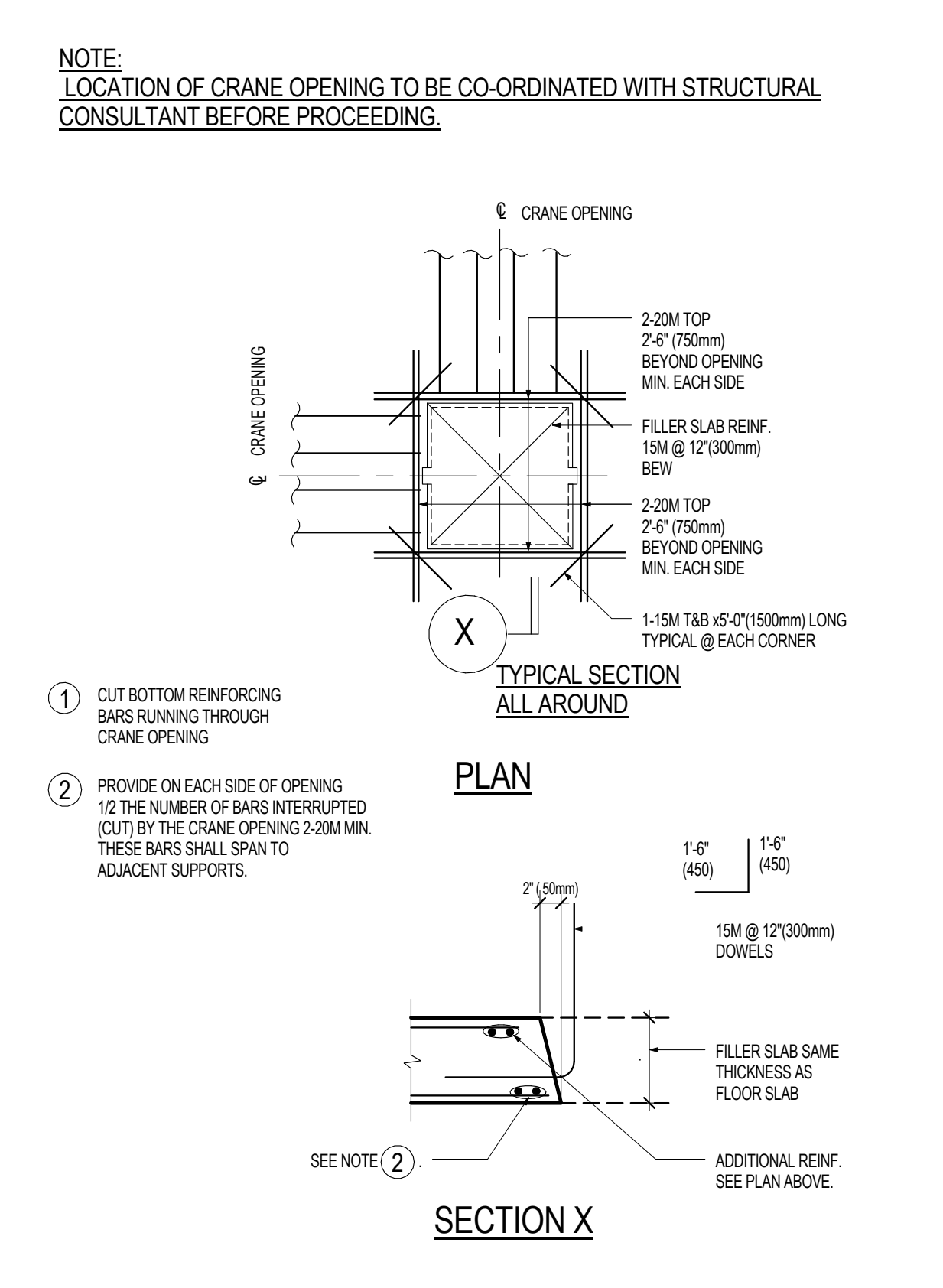
NOTE: LOCATION OF CRANE OPENING TO BE CO-ORDINATED WITH STRUCTURAL CONSULTANT BEFORE PROCEEDING.
TYPICAL SECTION ALL AROUND
PLAN
SECTION X

INTEGRITY BARS IN FLAT SLABS T-C11

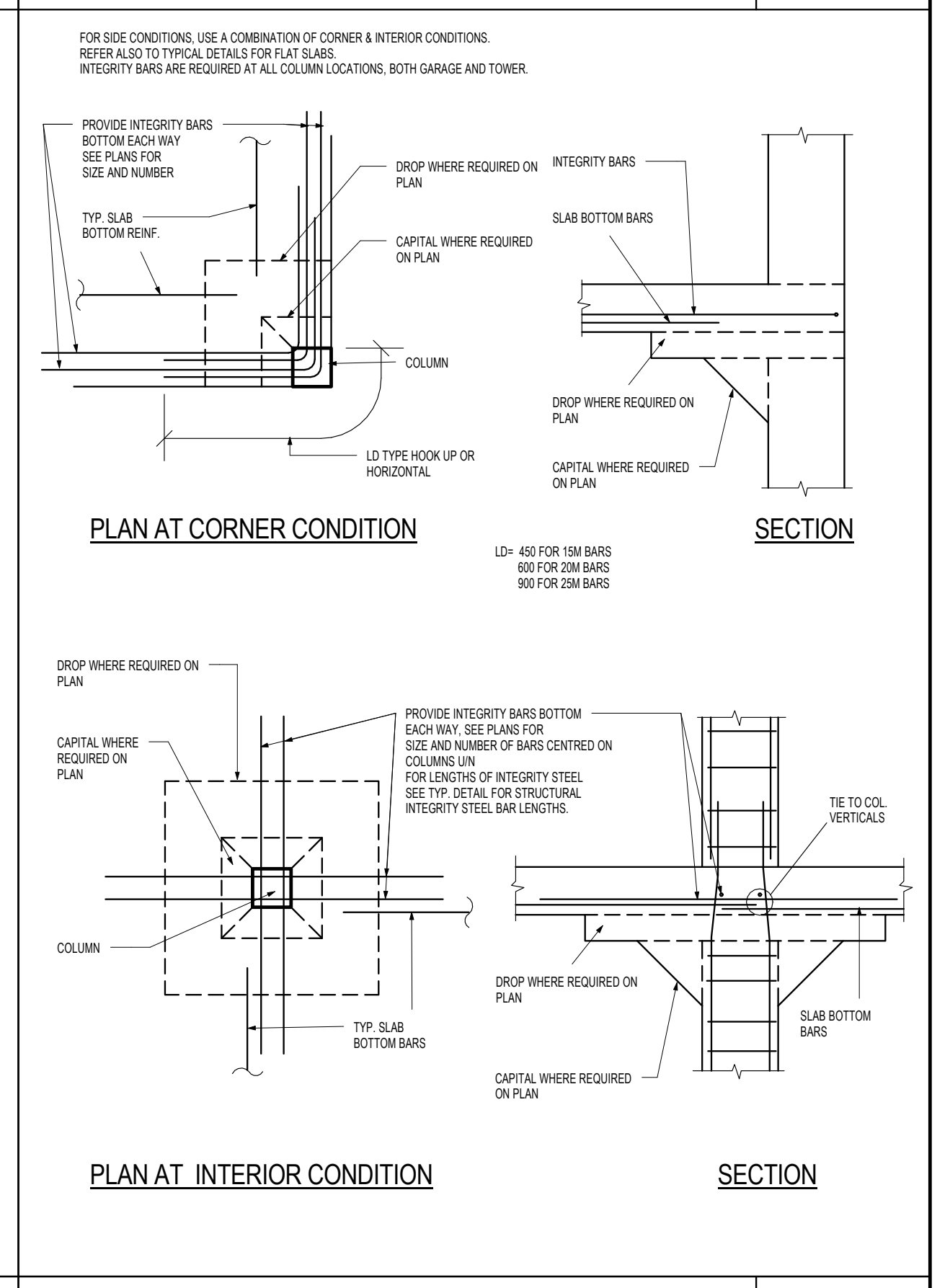

CONCRETE BEAMS T-C12

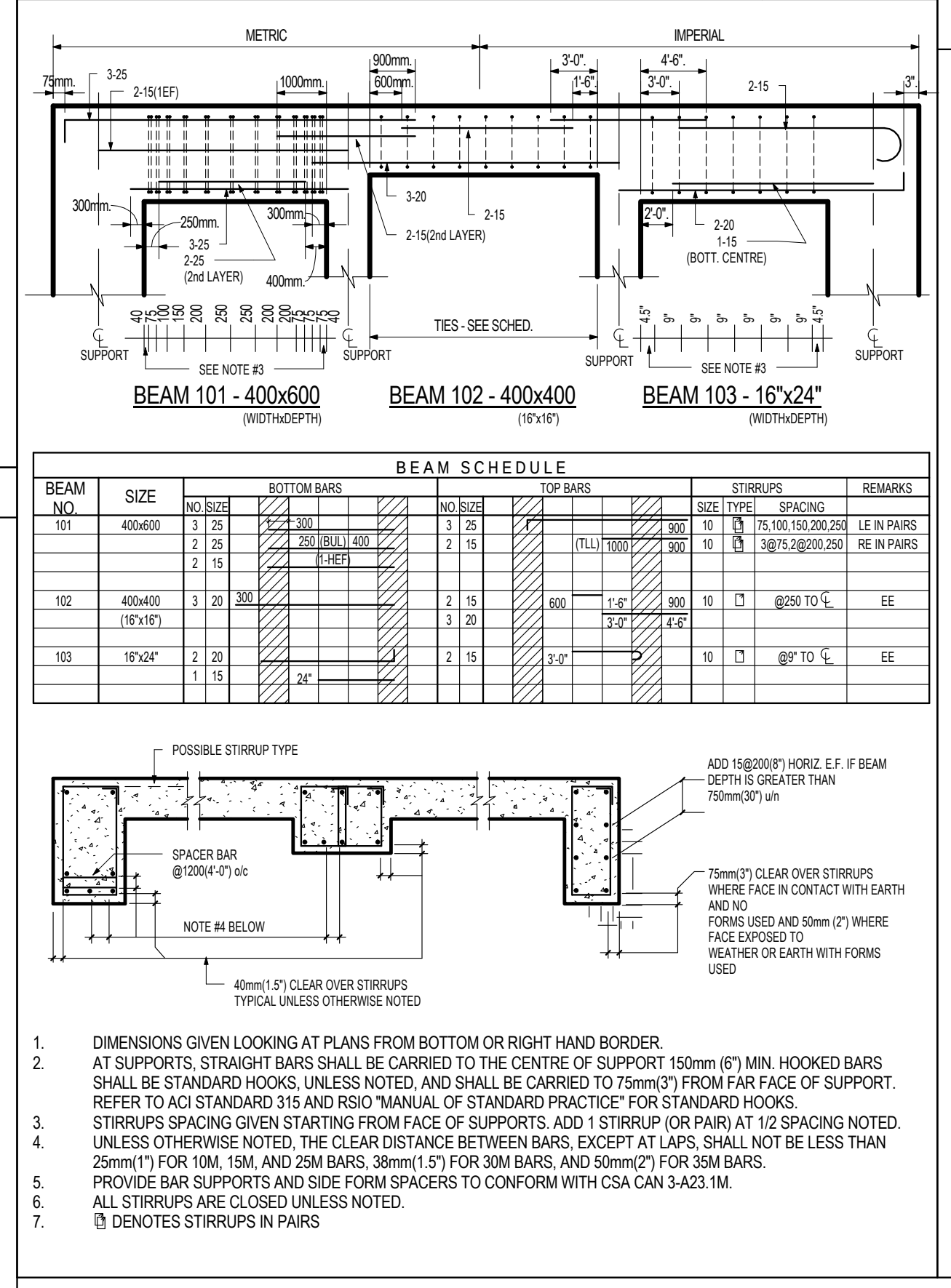

TYPICAL DETAIL FOR STRUCTURAL INTEGRITY STEEL BAR LENGTHS T-C13

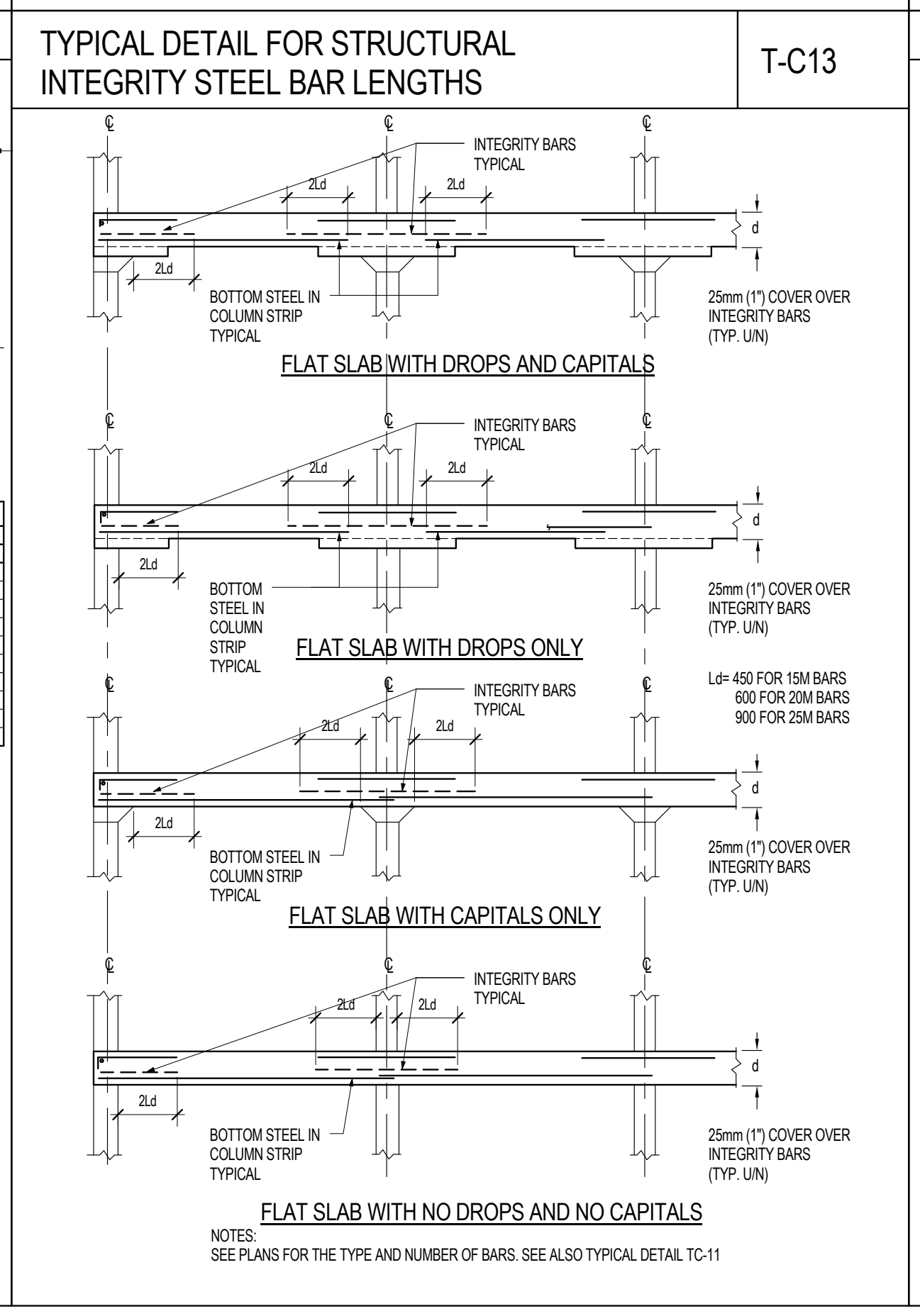
FLAT SLAB WITH DROPS AND CAPITALS
FLAT SLAB WITH DROPS ONLY
FLAT SLAB WITH CAPITALS ONLY
FLAT SLAB WITH NO DROPS AND NO CAPITALS

OIL STORAGE TANK T-C14

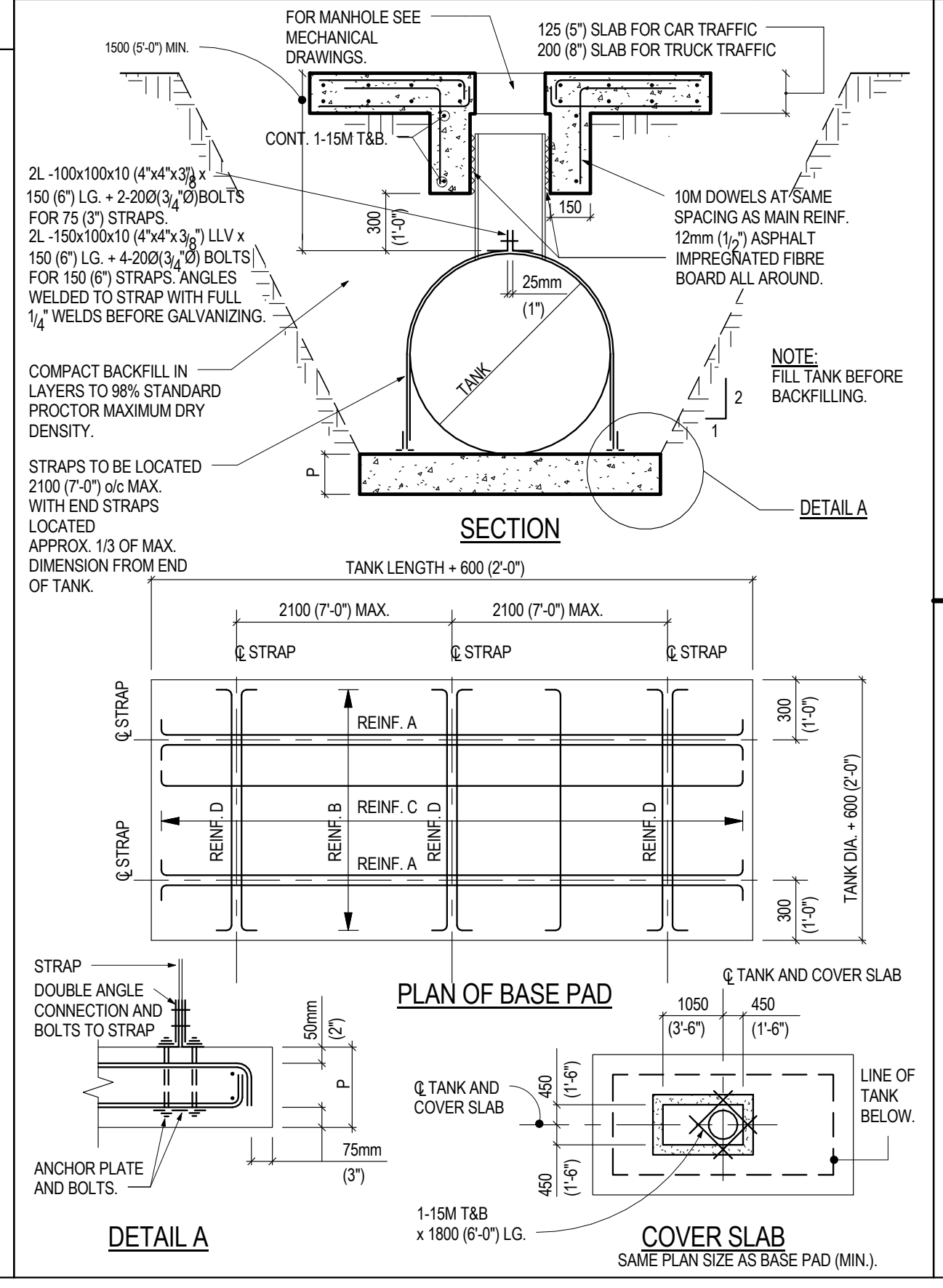

TYPICAL JOINTS IN EXTERIOR CONCRETE FOUNDATION WALLS T-C16

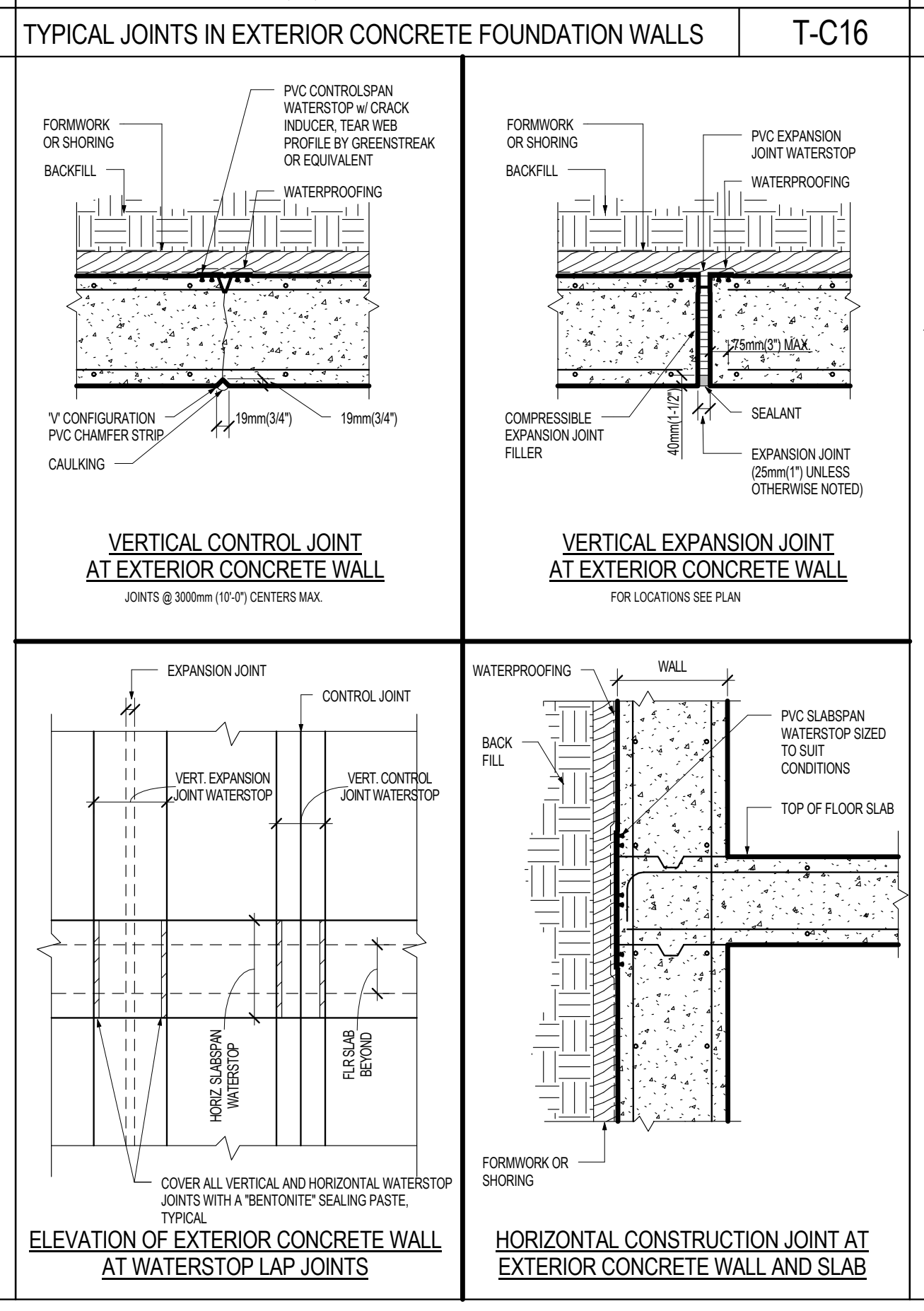
VERTICAL CONTROL JOINT AT EXTERIOR CONCRETE WALL
VERTICAL EXPANSION JOINT AT EXTERIOR CONCRETE WALL
ELEVATION OF EXTERIOR CONCRETE WALL AT WATERSTOP LAP JOINTS
HORIZONTAL CONSTRUCTION JOINT AT EXTERIOR CONCRETE WALL AND SLAB

TYPICAL DETAIL OF BALCONIES NOT WATERPROOFED T-C18

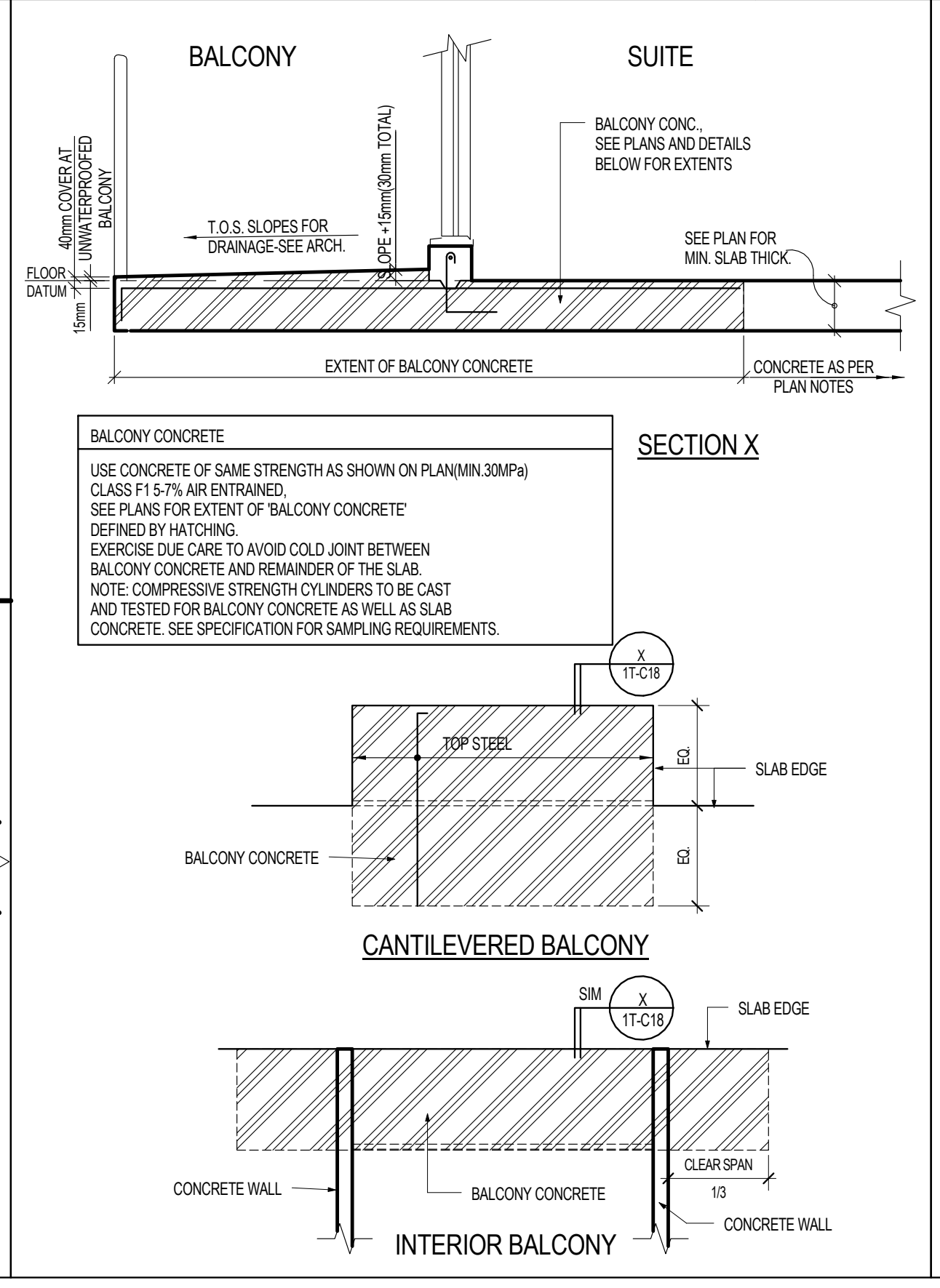

TYPICAL PARKING GARAGE S.O.G DETAILS T-C20

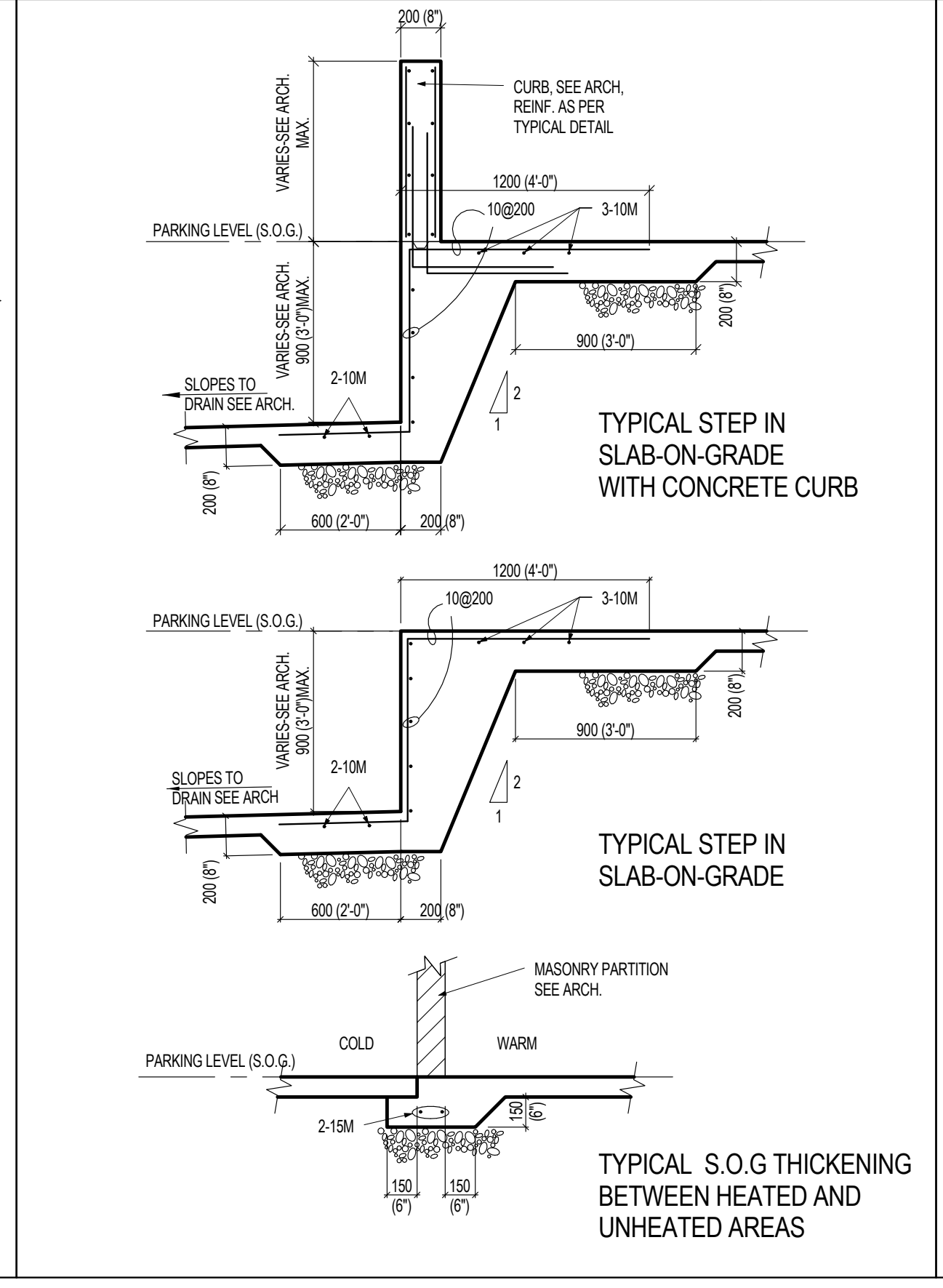
TYPICAL STEP IN SLAB-ON-GRADE WITH CONCRETE CURB
TYPICAL STEP IN SLAB-ON-GRADE
TYPICAL S.O.G THICKENING BETWEEN HEATED AND UNHEATED AREAS

THICKENING OF SLAB-ON-GRADE AT PRECAST STAIR T-C24C

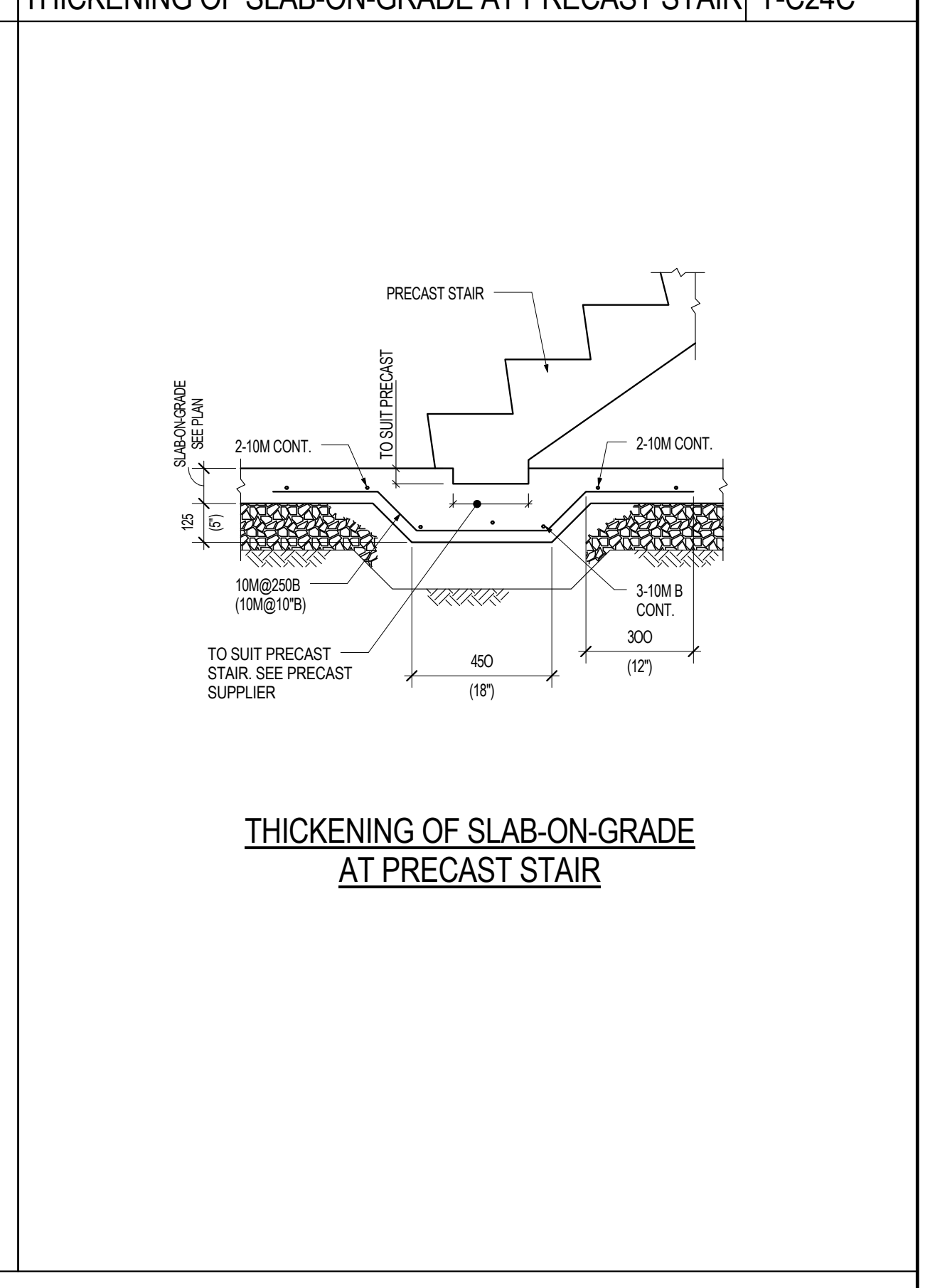

Contractor Must Check And Verify All Dimensions On The Job.

Do Not Scale The Drawings.

All Drawings, Specifications And Related Documents Are The Copyright Of The Architect And Must Be Returned Upon Request.

Reproduction Of Drawings, Specifications And Related Documents In Part Or Whole Is Forbidden Without The Architects Written Permission.

This Drawing Is Not To Be Used For Construction Until Signed ByThe Architect.

Date:

DEC.18,2015 DEC.18,2015

stephenson ENGINEERING
2550 Victoria Park Ave. Suite 602
Toronto ON M2J 5A9 | Tel: (416) 635 9970
www.stephenson-eng.com | info@stephenson-eng.com

No	Revision	Date

No	Issued For	Date
7	ISSUED FOR STEEL TENDER	DEC.18,2015
4	BUILDING PERMIT RESUBMISSION	SEPT.21,2015
3	BUILDING PERMIT RESUBMISSION	JULY 22,2015
2	BUILDING PERMIT SUBMISSION	JUNE 12,2015
1	ISSUED FOR WT REVIEW	MAY 01,2015

AQUAVISTA
AT BAYSIDE TORONTO

Drawing Title
GENERAL NOTES & TYPICAL DETAILS

Project
Hines TRIDEL®
AQUAVISTA
Block 3 - R3 & R4
Merchant's Whart
Toronto, ON

Scale: 1 : 1
Drawn by: Author
Checked by: BBS
Project No.: 20140031
Date: DEC.18,2015
Drawing No.: S8-01

Plot Date: 3/9/2016 10:03:10 AM

TYPICAL SECTION, PRECAST STAIR — T-C26

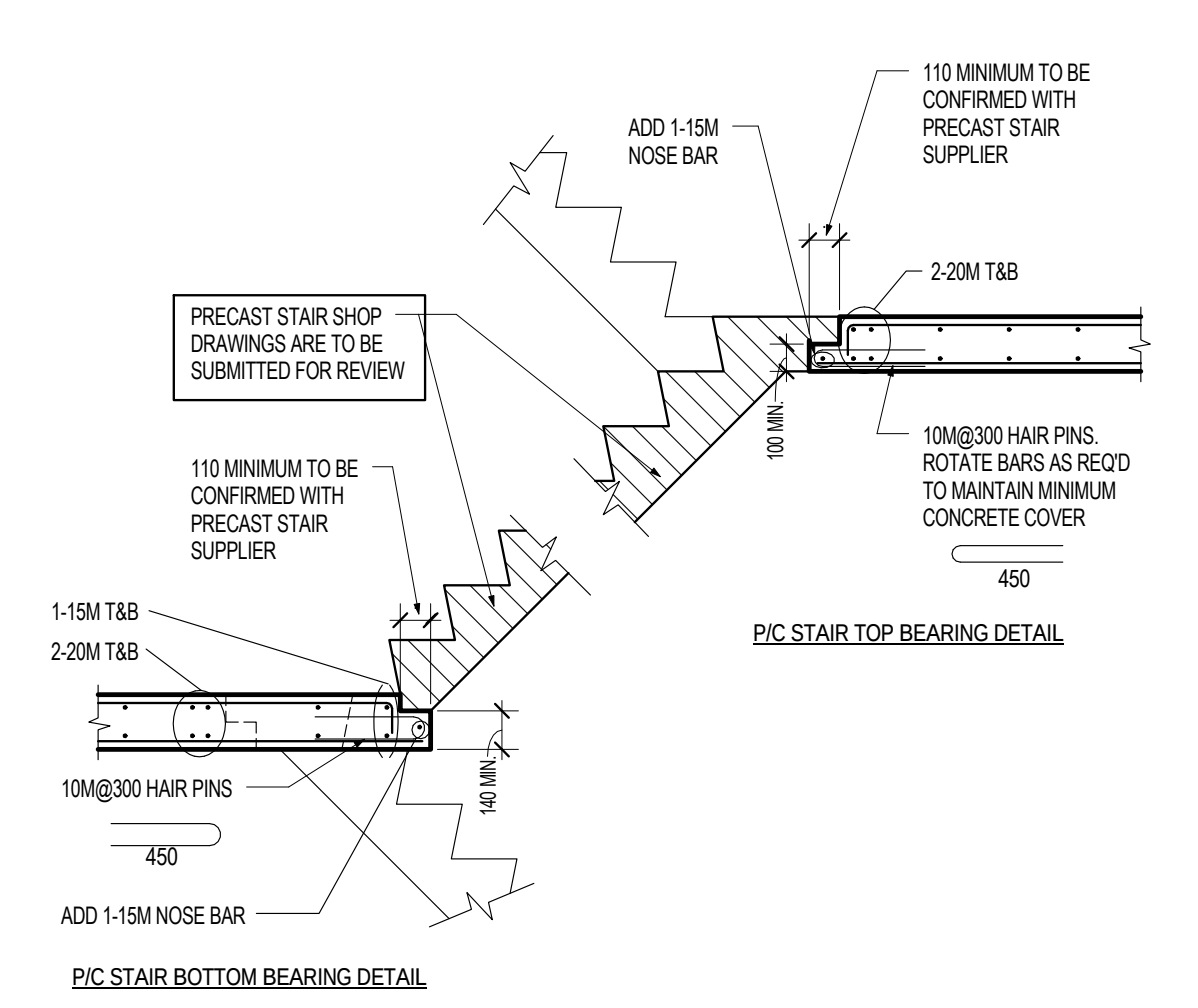

TYPICAL MID LANDING SECTION
PRECAST CONCRETE STAIR

SEE T-C27 FOR MID LANDING SLAB AND REINFORCEMENT

TYPICAL MID LANDING, PRECAST STAIR — T-C27

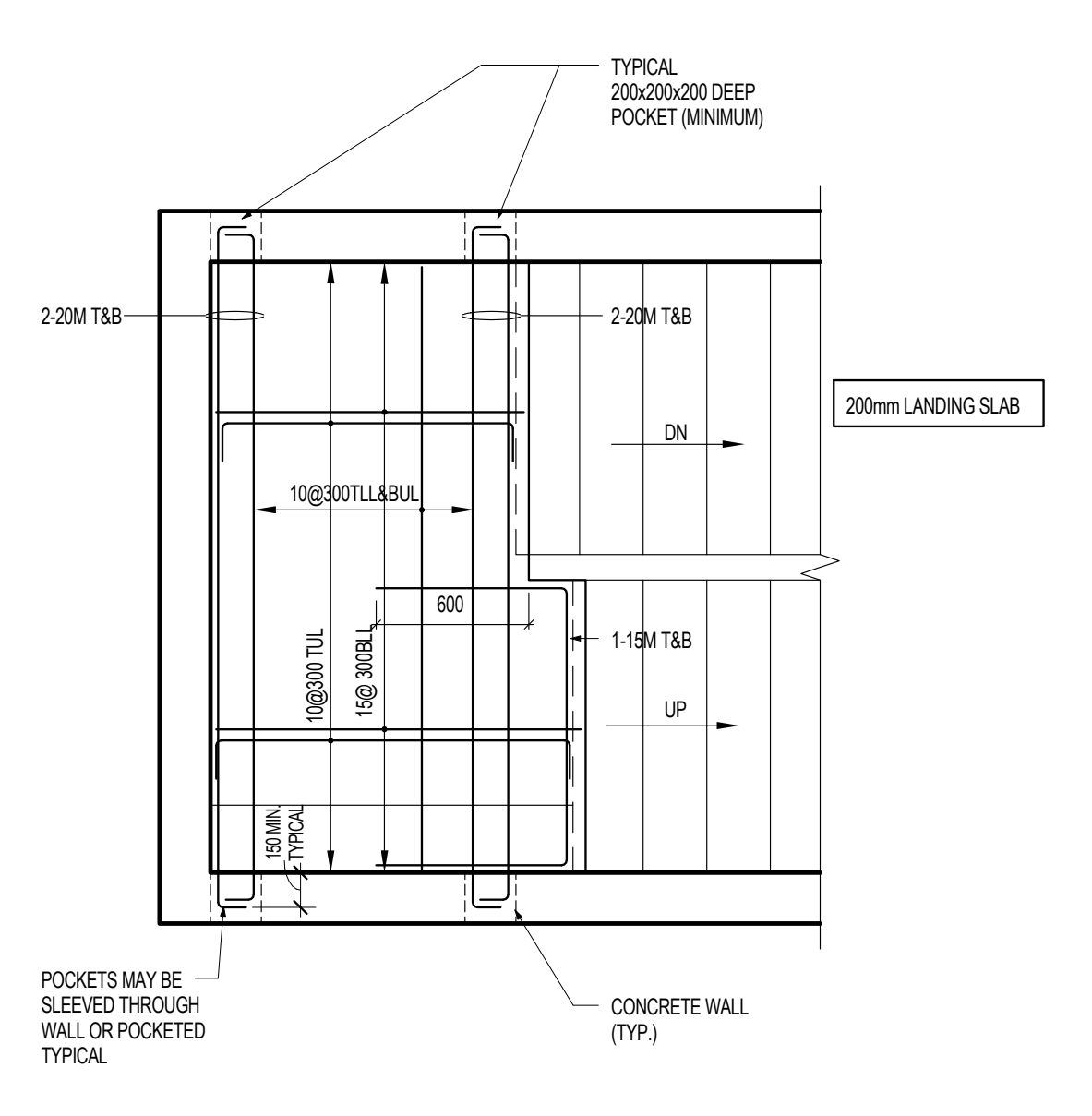

TYPICAL MID LANDING FRAMING PLAN
PRECAST CONCRETE STAIR

SEE T-C26 FOR BEARING DETAIL AND ADDED REINFORCEMENT IN MID LANDING SLAB PRECAST CONCRETE STAIR.

DETAILS OF NON LOAD-BEARING MASONRY WALLS AT CONCRETE SLAB AND WALL — T-C29

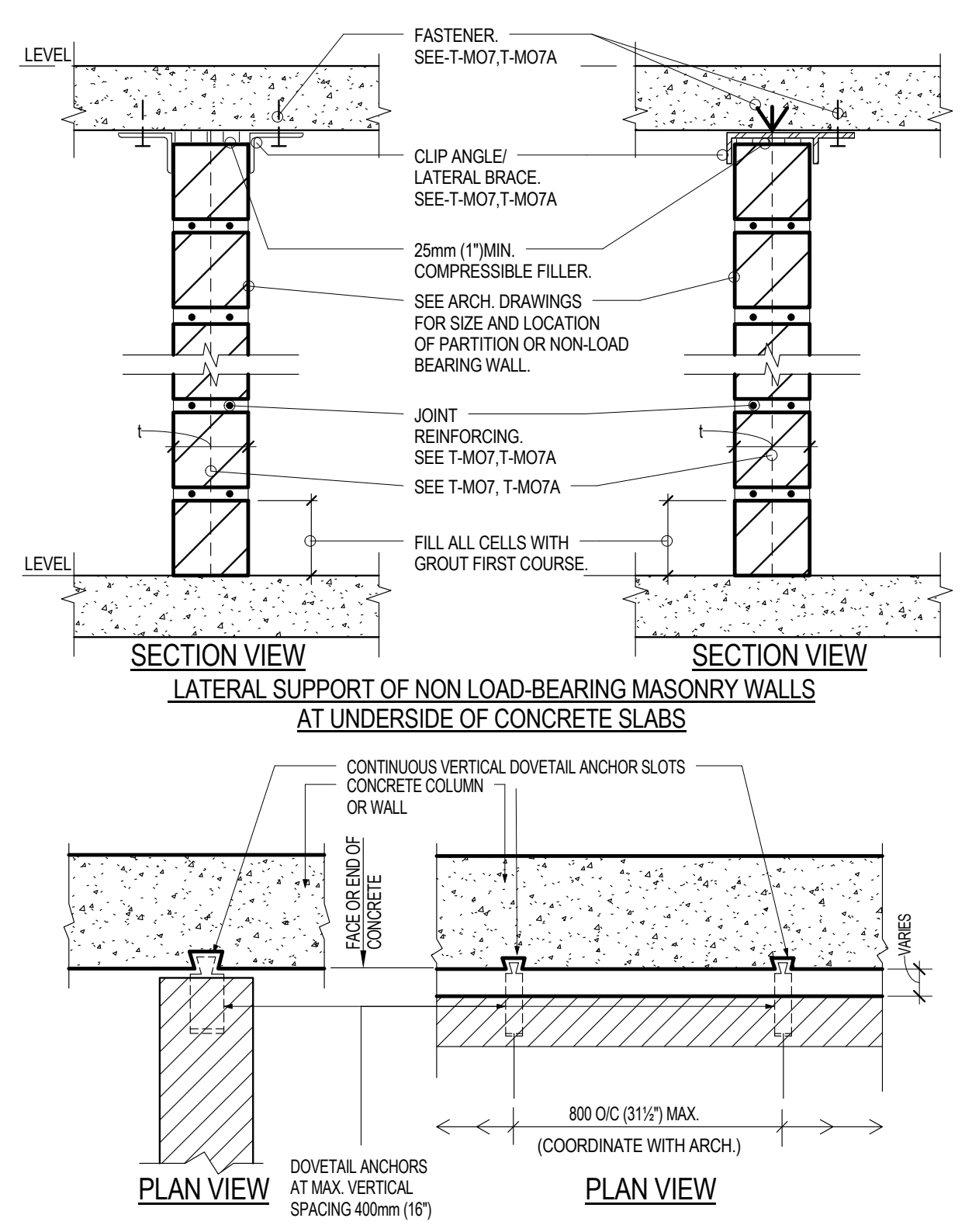

SECTION VIEW — SECTION VIEW

LATERAL SUPPORT OF NON-LOAD-BEARING MASONRY WALLS AT UNDERSIDE OF CONCRETE SLABS

PLAN VIEW — MASONRY WALL ABUTTING CONCRETE

PLAN VIEW — MASONRY FACING CONCRETE

TYPICAL WINDOW WASHING DAVIT BASE DETAIL — T-C30

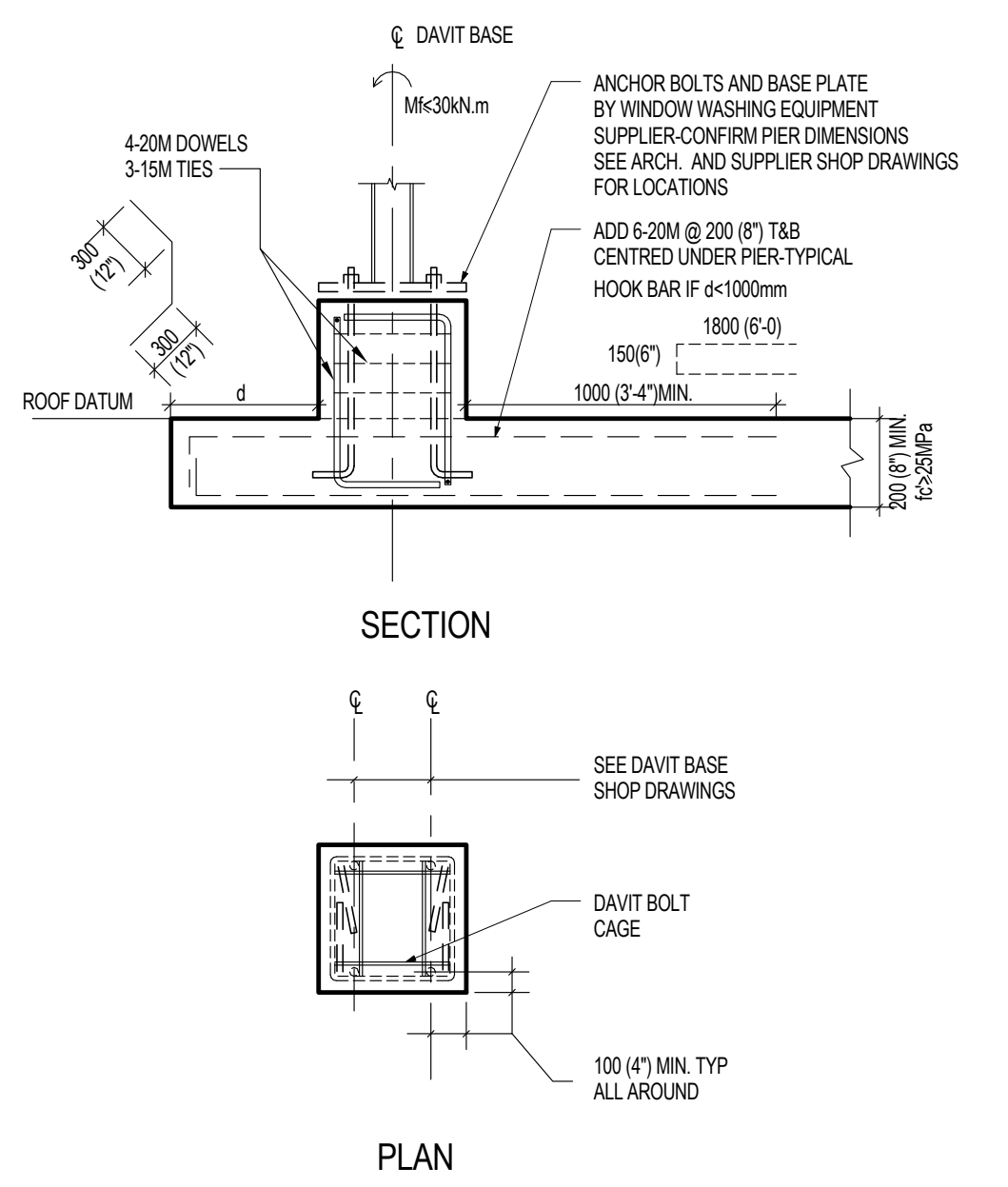

TYPICAL WINDOW WASHING DAVIT BASE DETAIL

TYPICAL ADDITIONAL REINFORCING AT WINDOW WASHING ANCHORS — T-C32

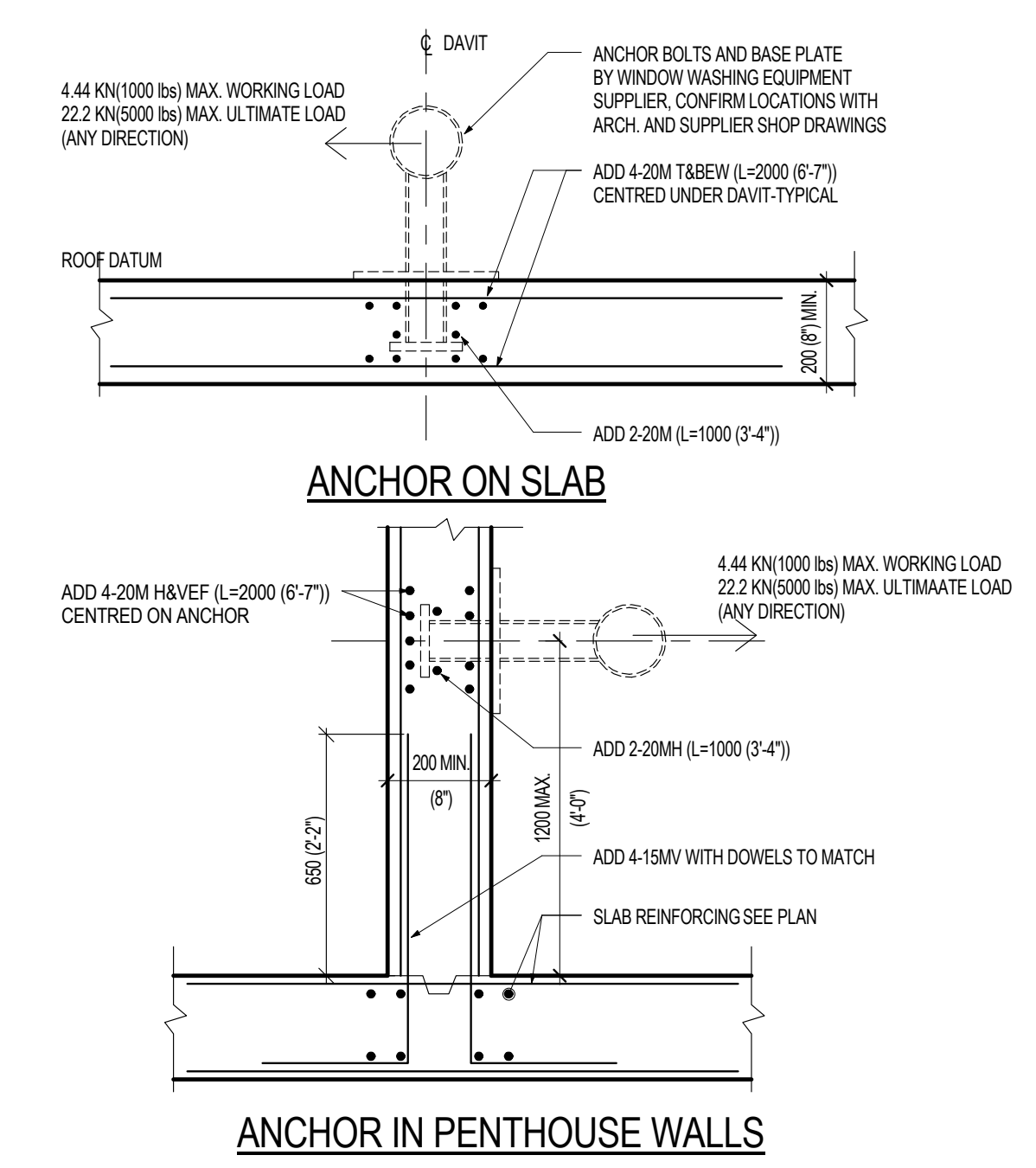

ANCHOR ON SLAB

ANCHOR IN PENTHOUSE WALLS

TYPICAL ADDITIONAL REINFORCING
AT WINDOW WASHING DAVITS

TYPICAL DETAIL OF OPENINGS IN CONCRETE WALL — T-C36

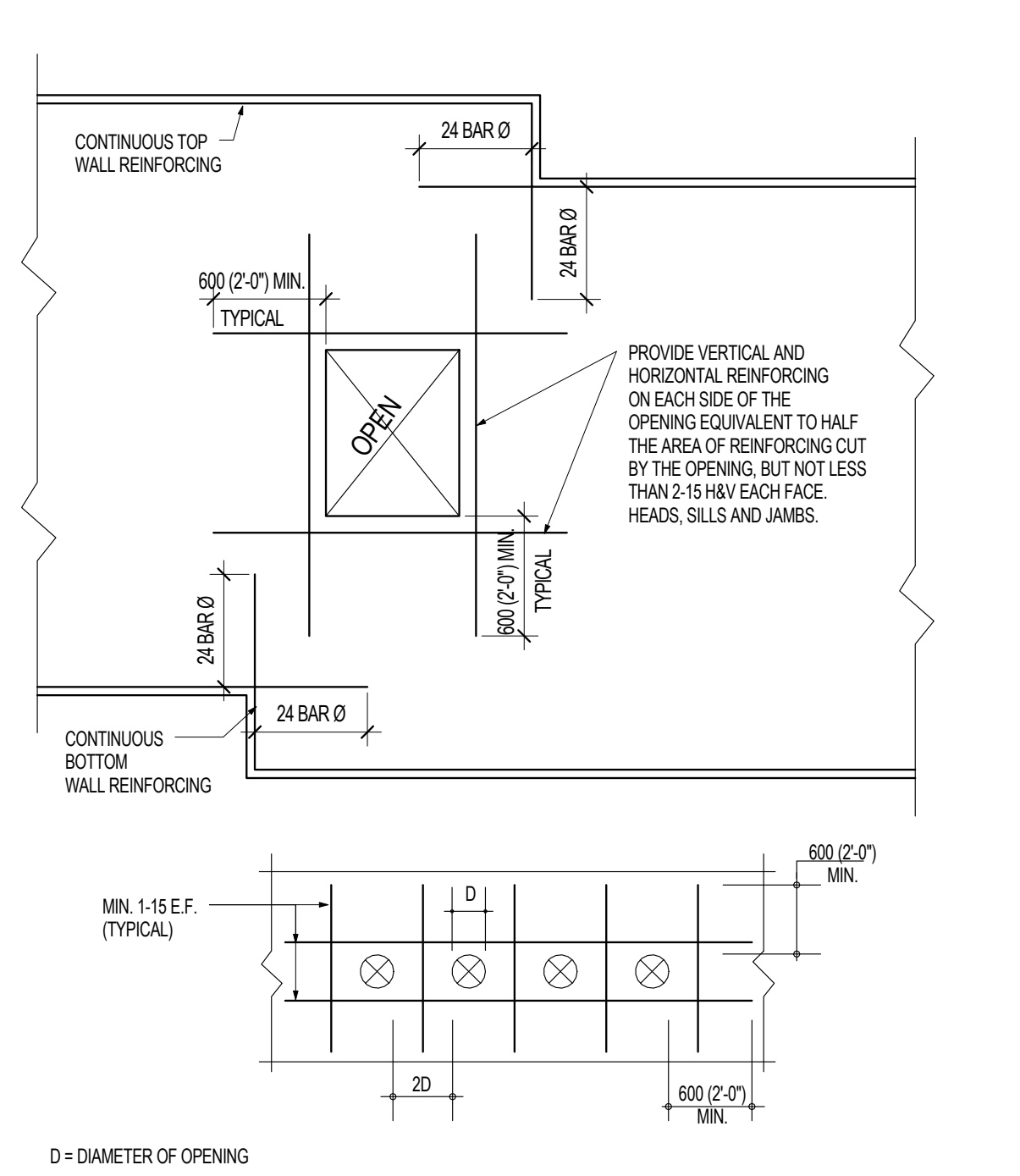

TYPICAL DETAIL OF ADDITIONAL REINFORCEMENT
AT WALL OPENINGS

(TYPICAL UNLESS OTHERWISE SHOWN ON DRAWINGS)

TYPICAL ELEVATOR DIVIDER BEAM DETAIL — T-C37

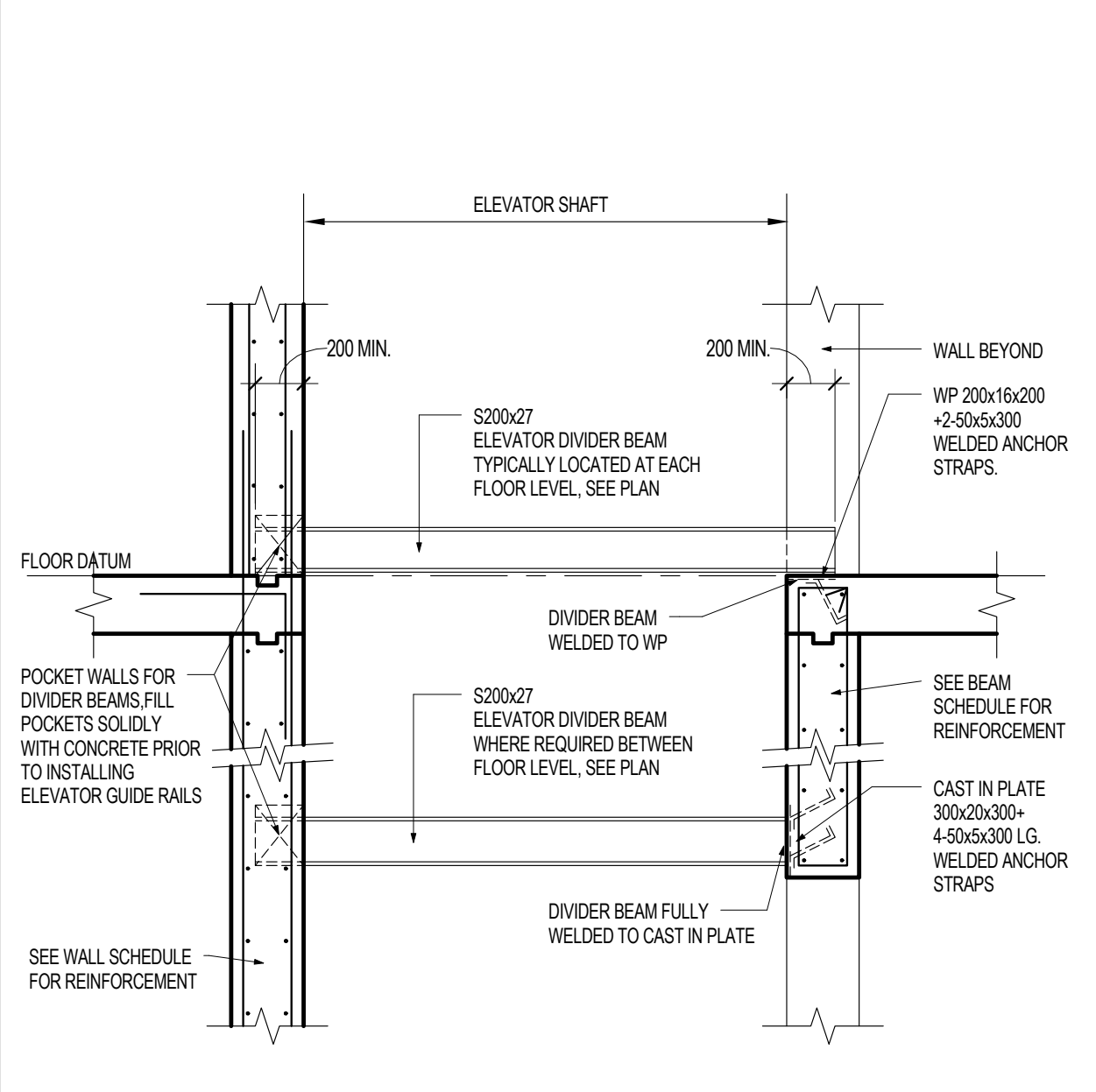

ELEVATOR DIVIDER BEAM ANCHORAGE DETAILS

TYPICAL ROOF ANCHOR BASE DETAIL — T-C38

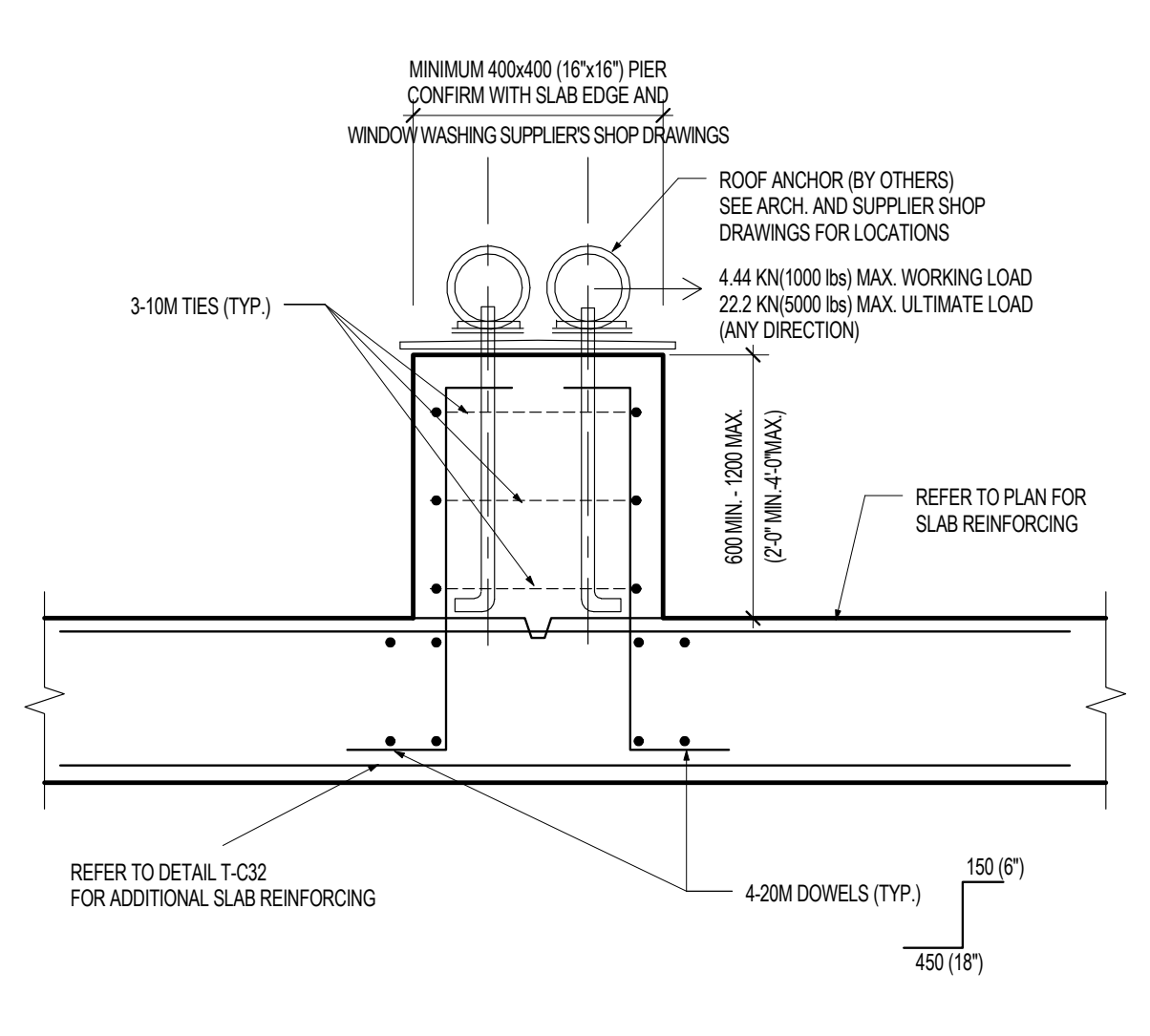

TYPICAL ROOF ANCHOR BASE DETAIL

COLUMN CAST INTEGRALLY WITH SHEAR WALLS — T-C41

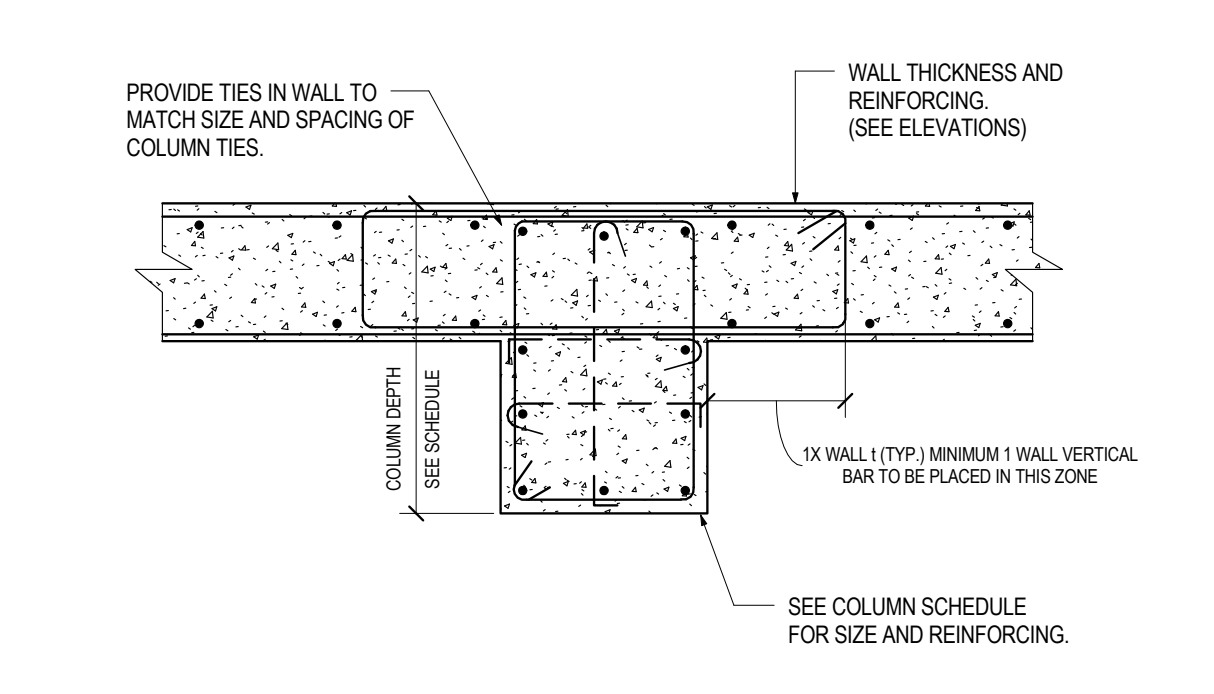

NOTE:
CLEAR COVER OF WALL TIES TO MATCH THAT OF HORIZONTAL WALL REINFORCEMENT.

TYPICAL CONCRETE BUILD-UP DETAIL (D≤500mm) — T-C42

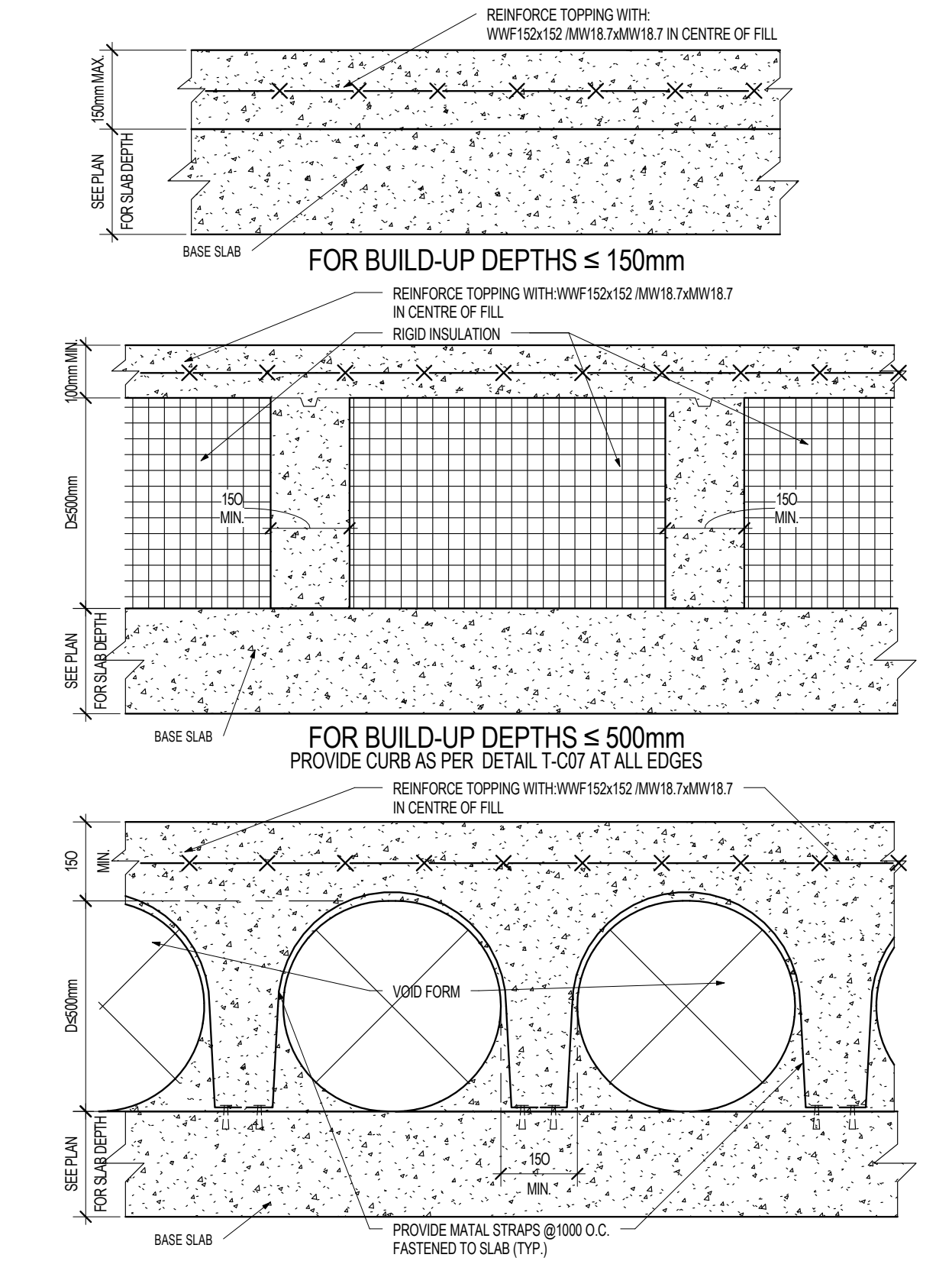

FOR BUILD-UP DEPTHS ≤ 150mm

FOR BUILD-UP DEPTHS ≤ 500mm
PROVIDE CURB AS PER DETAIL T-C07 AT ALL EDGES

FOR BUILD-UP DEPTHS ≤ 500mm
(ALTERNATE)

PROVIDE CURB AS PER DETAIL T-C07 AT ALL EDGES

EMBEDDED CONDUITS IN SLAB — T-C43

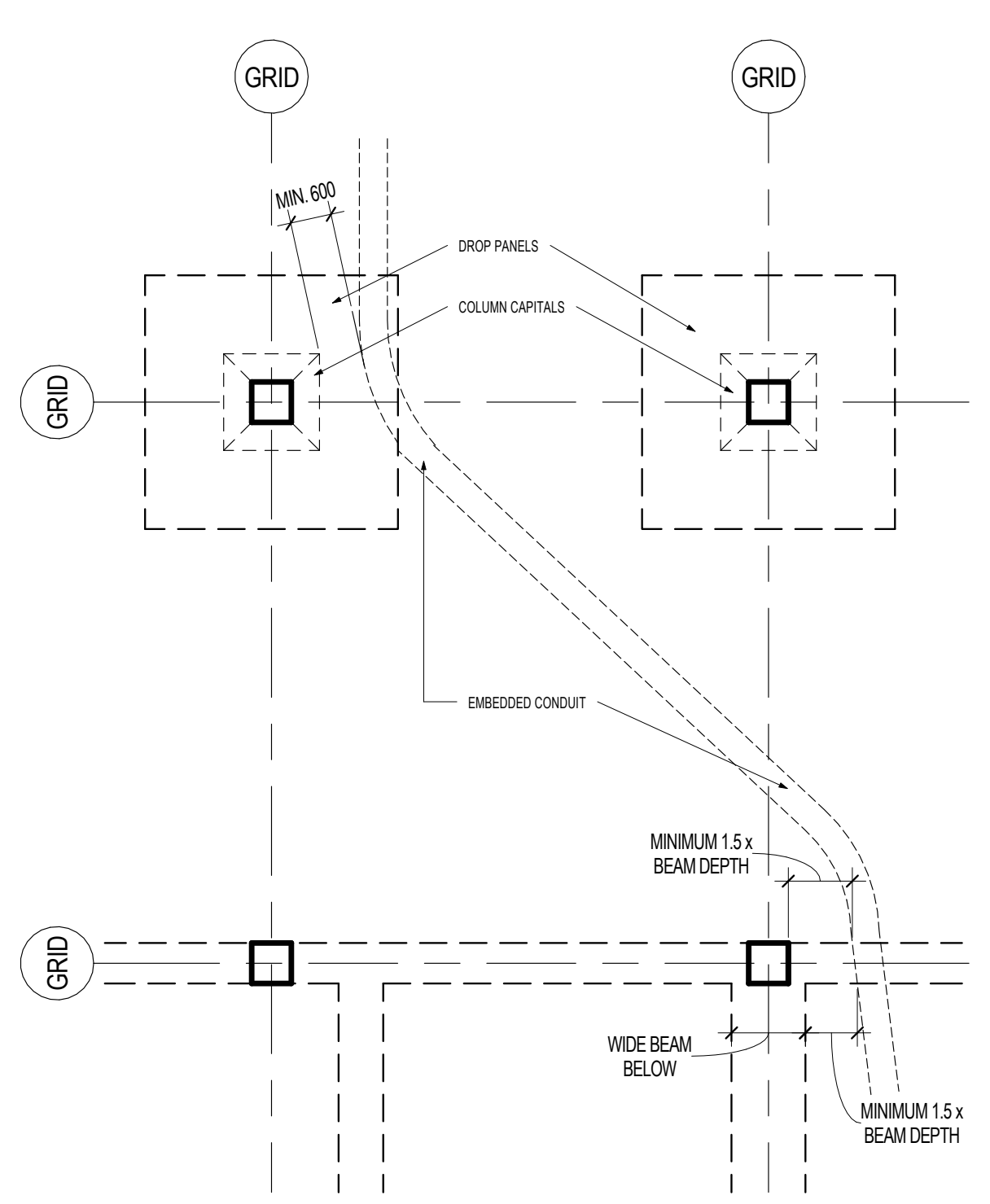

PART PLAN

EMBEDDED CONDUITS AND PIPES — T-C44

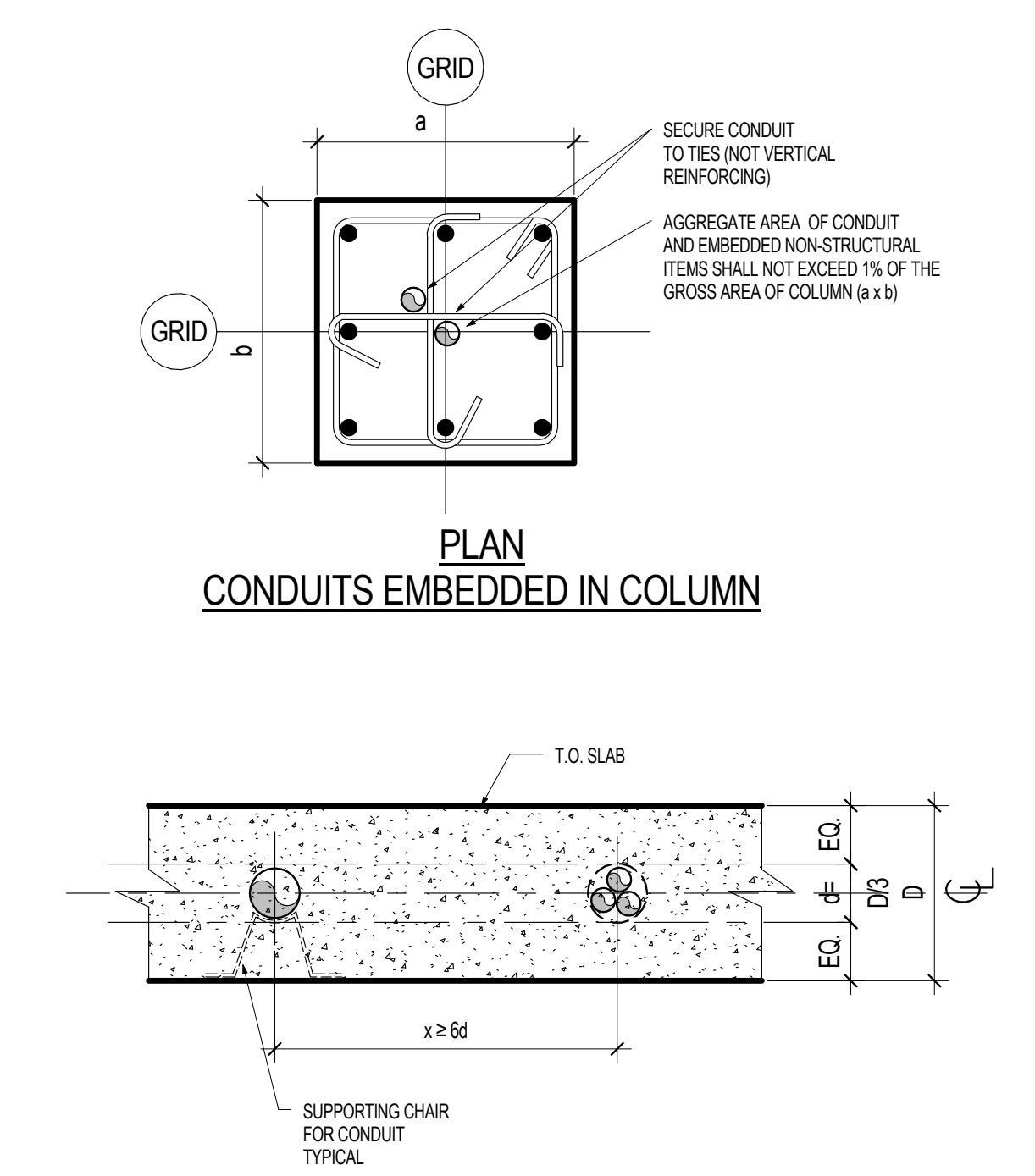

PLAN
CONDUITS EMBEDDED IN COLUMN

SECTION
CONDUITS EMBEDDED IN SLAB

*EXCEPT AS NOTED ABOVE, REFER TO SECTION 6.7.5. OF A23.1-09 FOR ADDITIONAL REQUIREMENTS FOR CONDUITS IN CONCRETE.

SHRINKAGE STRIP DETAIL — T-C45

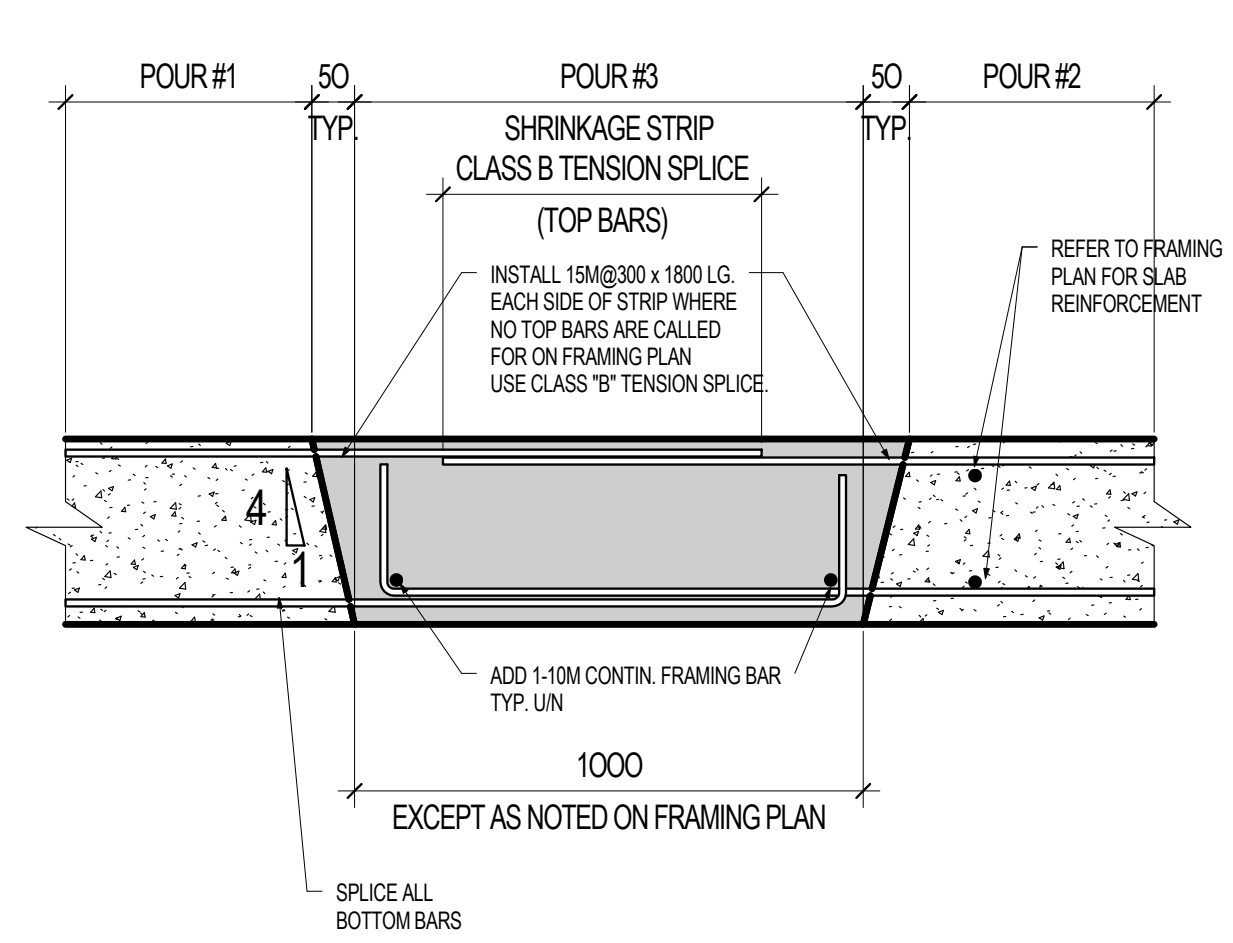

NOTES:

1. KEEP EDGE OF FLOORS AND ADJACENT BAYS SHORED UNTIL STRIP IS POURED AND CONCRETE HAS ATTAINED SPECIFIED STRENGTH.
2. POUR SHRINKAGE STRIP AT CONSULTANT SPECIFIED BAYS AFTER ALL THE ADJOINING SEGMENTS OF SLABS HAVE BEEN CONSTRUCTED OR AS OTHERWISE NOTED IN SPECIFICATION.
3. PROVIDE VERTICAL EXPANSION JOINTS IN WALLS THAT INTERSECT SEPARATION STRIP.

SUPPORT FOR EXTERIOR STAIRS AT GRADE — T-C50

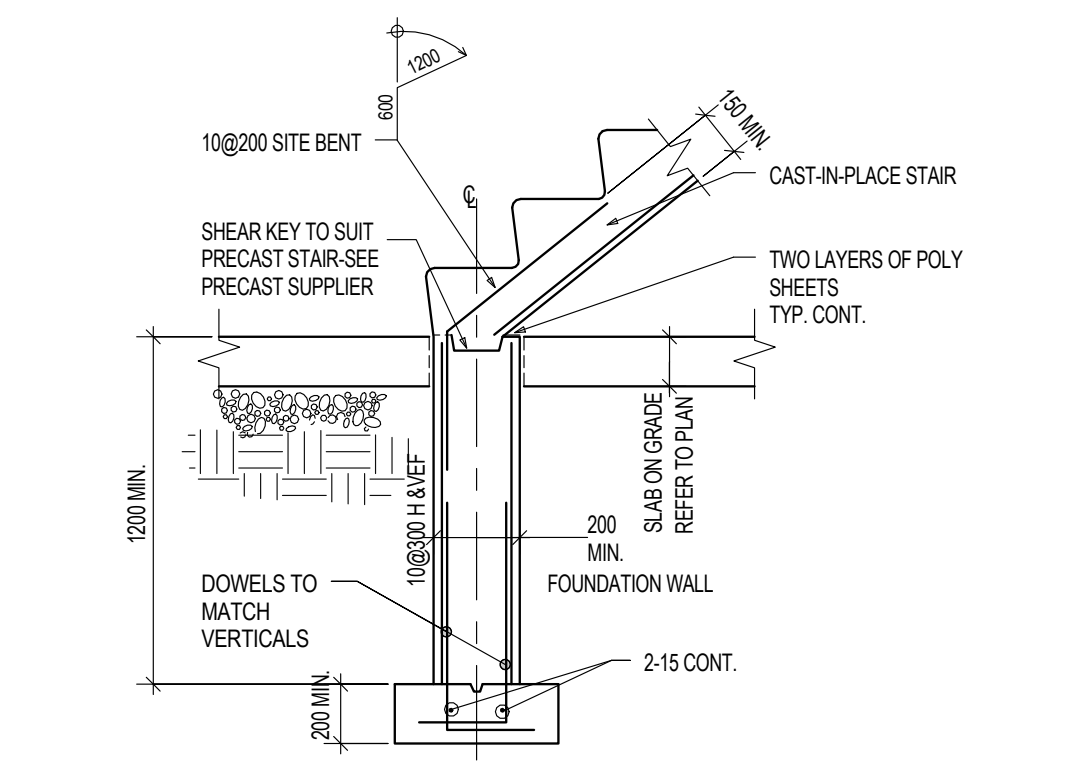

SUPPORT FOR STAIRS AT GRADE
FOR CAST-IN-PLACE/PRECAST STAIRS

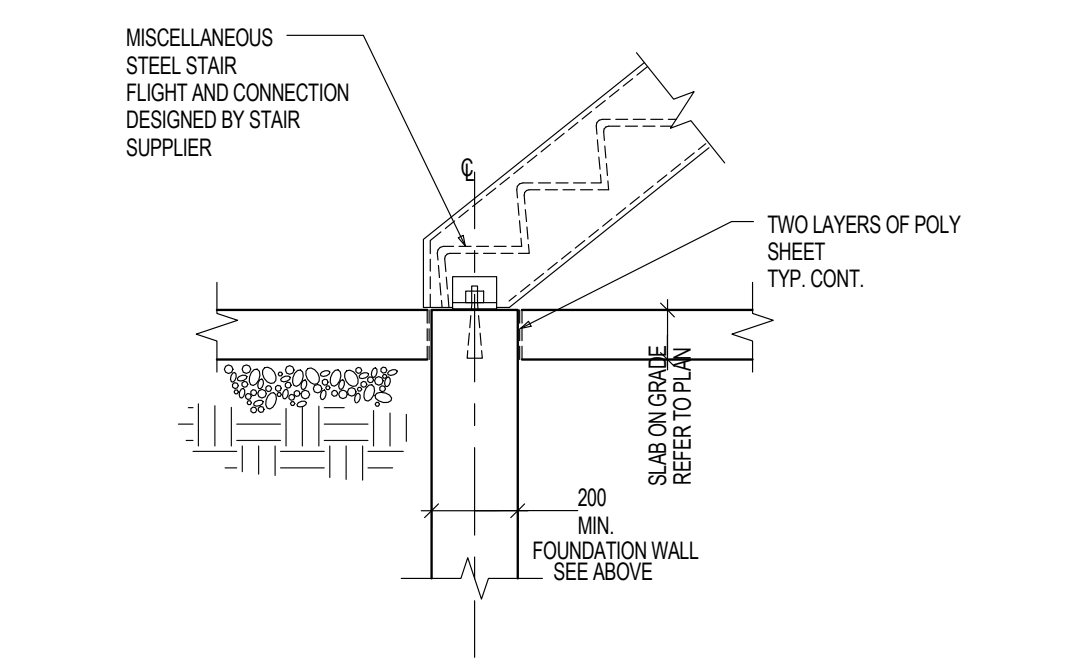

SUPPORT FOR STAIRS AT
GRADE
FOR STEEL STAIRS

TYPICAL SUMP PIT DETAIL — T-C51

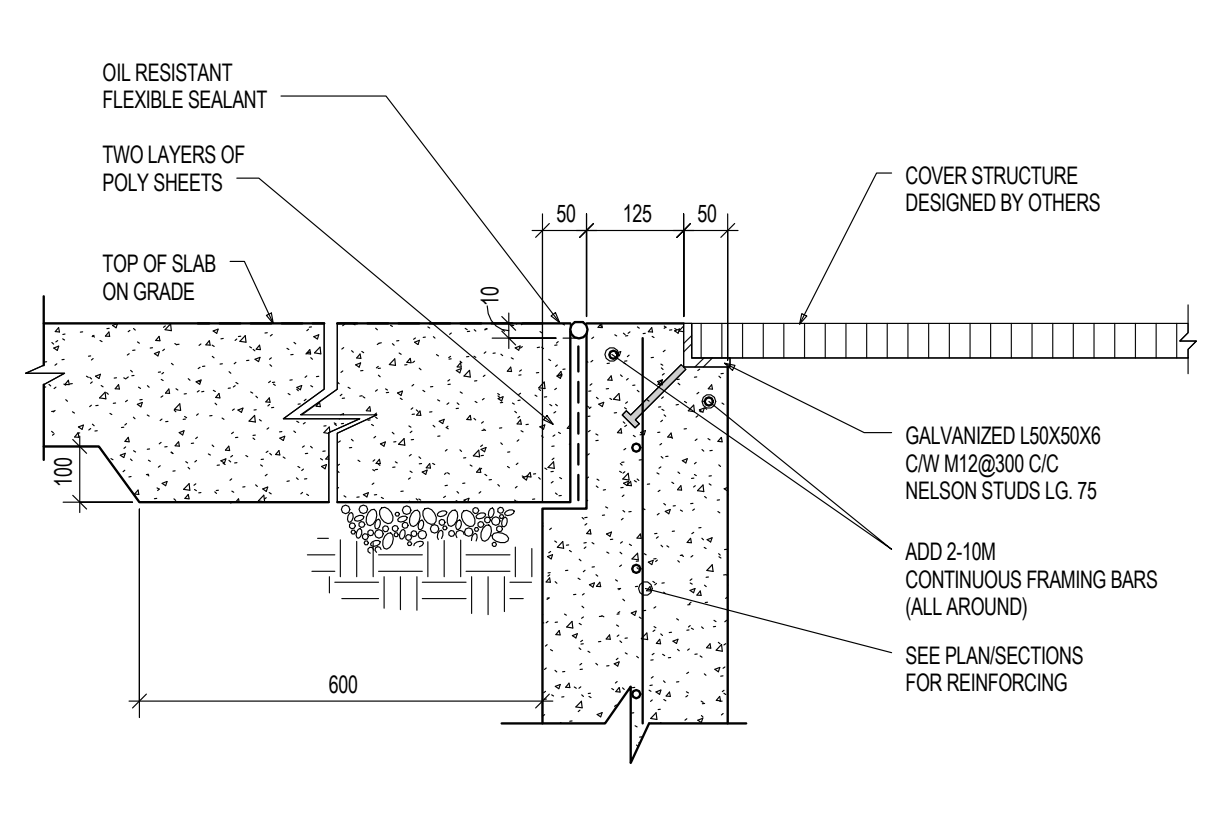

TYPICAL SUMP PIT DETAIL

BUILT-UP FLOOR DETAILS - CONCRETE ON DECK (FILL DEPTH (D) > 500mm) — T-C52

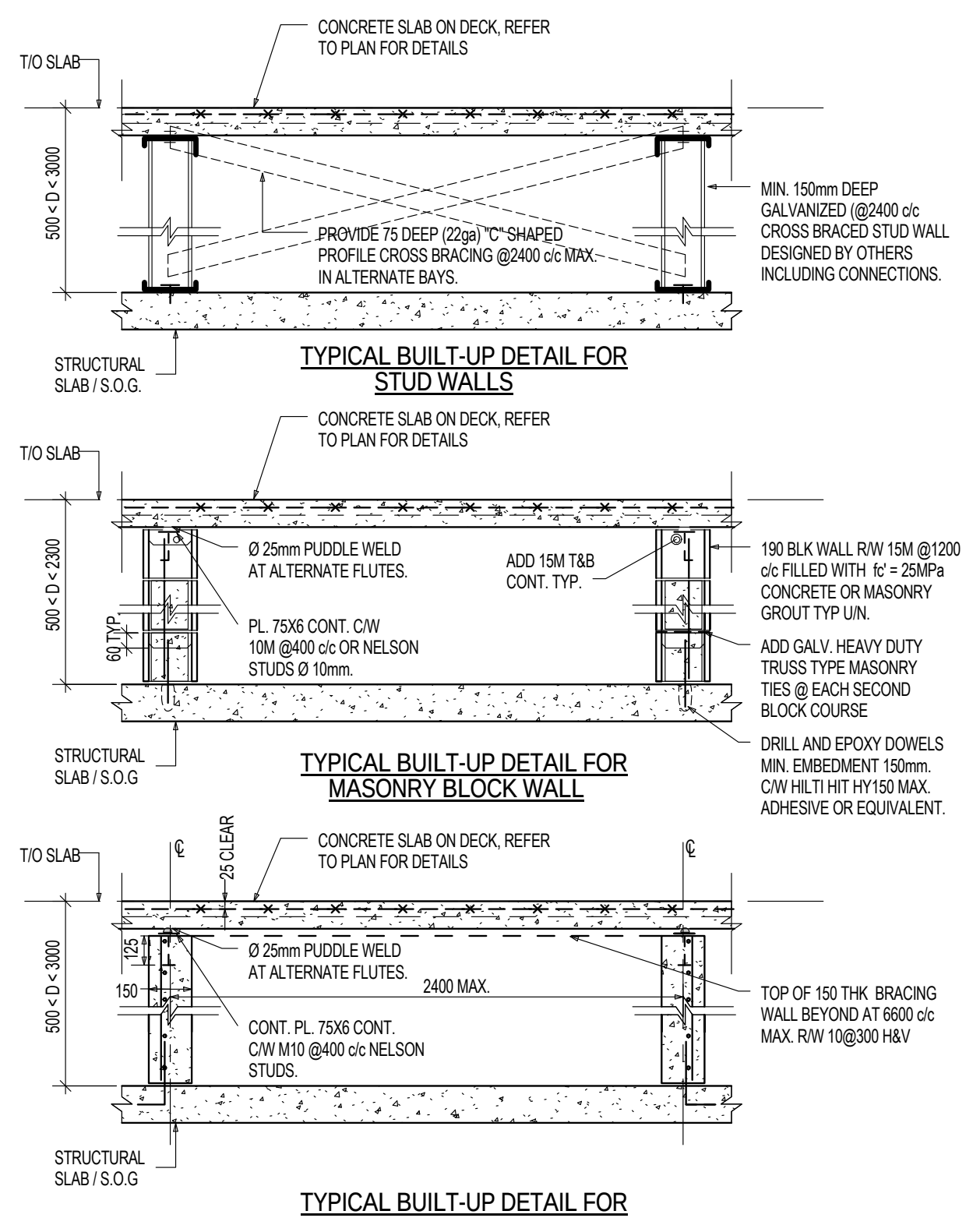

TYPICAL BUILT-UP DETAIL FOR STUD WALLS

TYPICAL BUILT-UP DETAIL FOR MASONRY BLOCK WALL

TYPICAL BUILT-UP DETAIL FOR CONCRETE CURB

TYPICAL SLAB DEPRESSION REINFORCING DETAILS — T-C53A

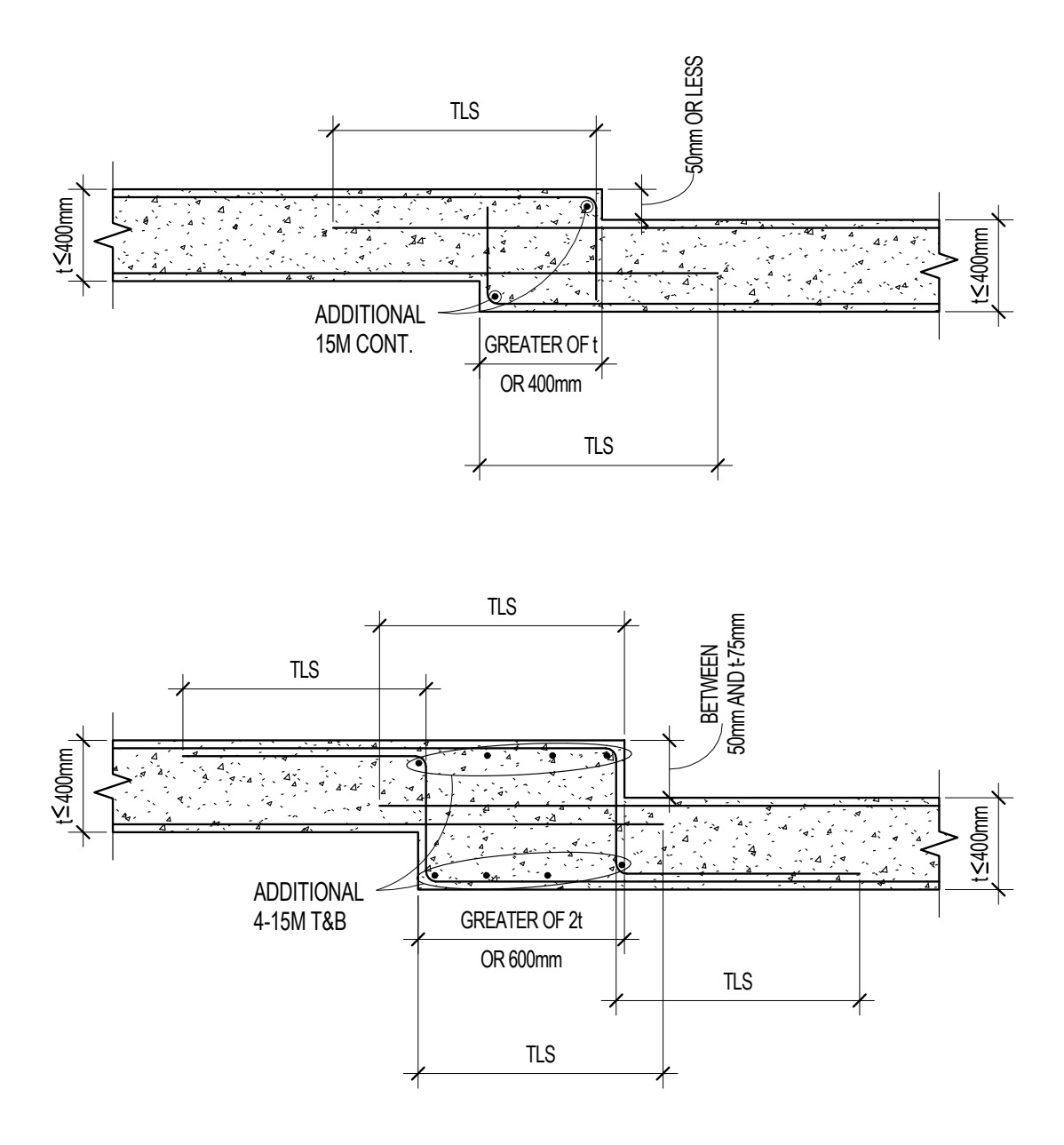

SLAB DEPRESSION REINFORCING DETAILS

NOTE: FOR SLAB DEPRESSIONS GREATER THAN "t-75mm"
SEE T-C53B.
SEE T-C56A AND T-C56B FOR TENSION LAP SPLICE (TLS) LENGTHS

TYPICAL STEP IN SLAB REINFORCING DETAILS — T-C53B

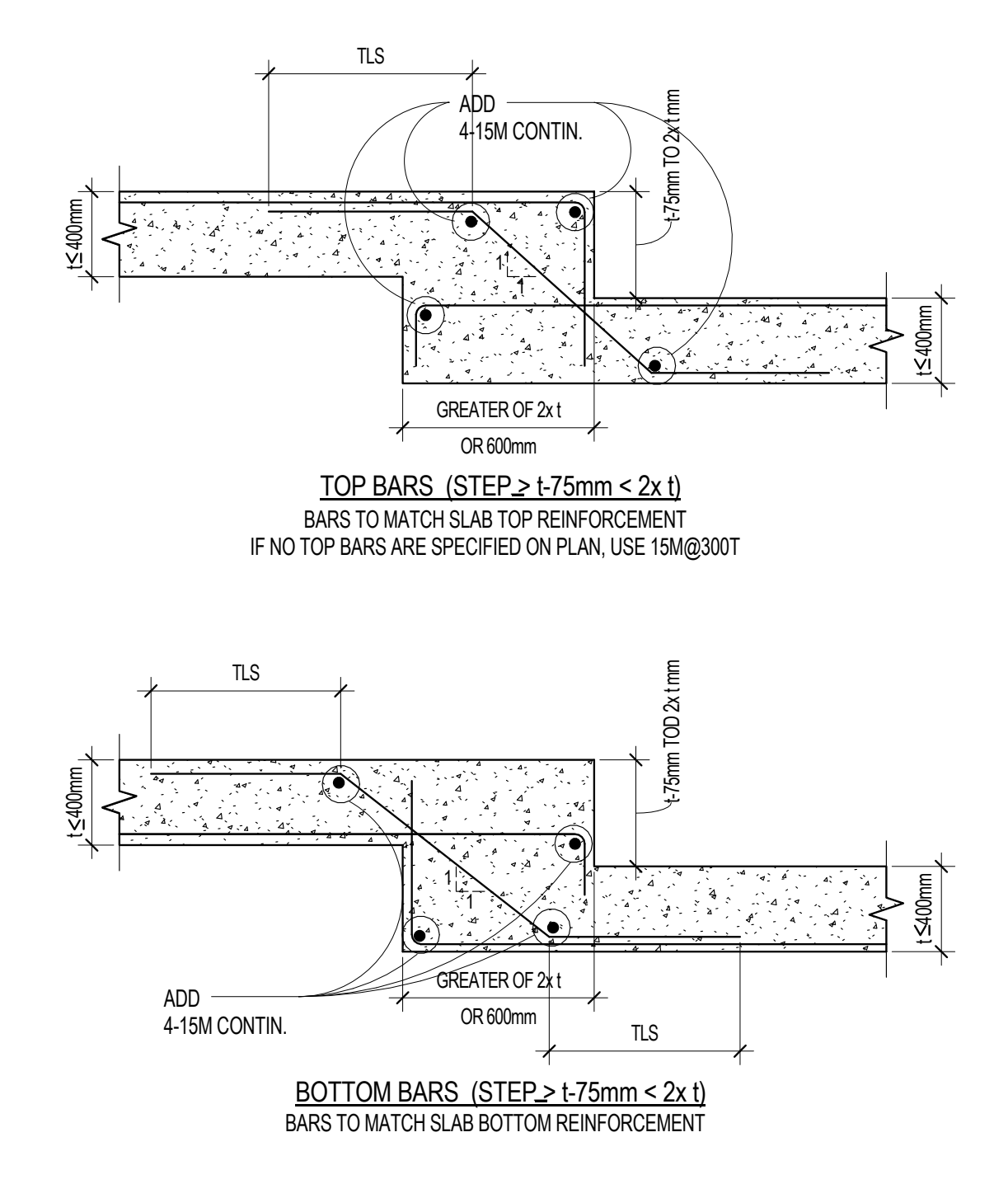

TOP BARS (STEP ≥ t-75mm < 2x t)
BARS TO MATCH SLAB TOP REINFORCEMENT
IF NO TOP BARS ARE SPECIFIED ON PLAN, USE 15M@300T

BOTTOM BARS (STEP ≥ t-75mm < 2x t)
BARS TO MATCH SLAB BOTTOM REINFORCEMENT

TYPICAL BAR SPLICE DETAILS AT STEP IN SLAB

NOTE: FOR SLAB STEPS GREATER THAN "2x t mm"
SEE SECTIONS.
SEE T-C56A AND T-C56B FOR TENSION LAP SPLICE (TLS) LENGTHS

TYPICAL CAST IN PLACE SHEAR PLATE DETAIL — T-C55

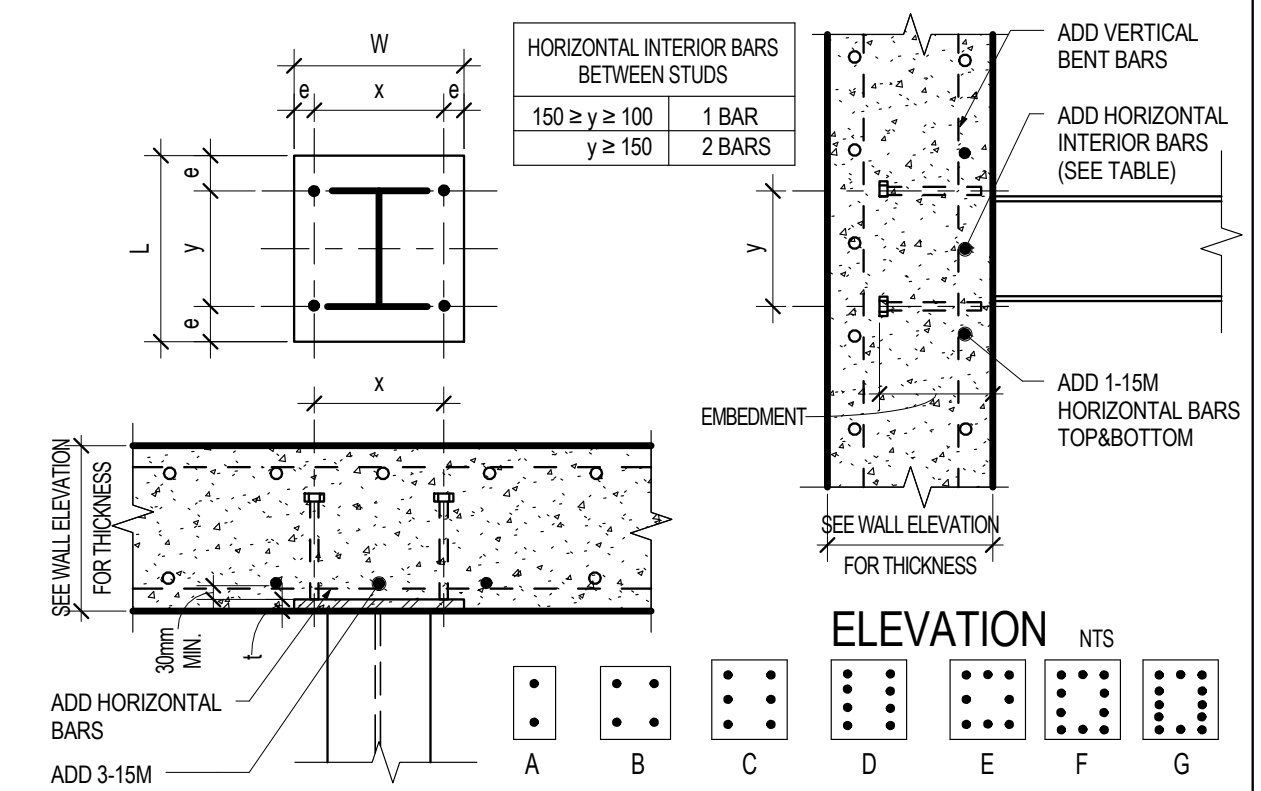

PLAN NTS

ELEVATION NTS

TYPES OF WALL PLATES

WALL PLATE	WALL PLATE DIMENSIONS W	x L	x t	WALL PLATE TYPE	ANCHORS #	Ø	EMBED	COL	ROW	x	y	e	ALLOWABLE BEAM SECTIONS
WP1	100	150	8	A	2	16	150	1	2	0	90	30	C75x5 - C75x9
WP2	150	200	8	B	4	16	150	2	2	90	140	30	C100x7 - C130x13
WP3	150	250	10	B	4	19	150	2	2	80	180	35	C150x12 - C180x22
WP4				B	4	19	200	2	2	80	180	35	
WP5	150	300	10	B	4	19	150	2	2	80	230	35	C200x17 - C250x23
WP6	150	350	12	C	6	19	150	2	3	80	140	35	C250x30 - C310x31
WP7				C	6	19	200	2	3	80	140	35	
WP8				C	6	19	250	2	3	80	140	35	
WP9	200	250	10	B	4	19	150	2	2	130	180	35	W150x13 - W200x31
WP10	250	250	10	B	4	19	150	2	2	180	180	35	W200x36 - W200x46
WP11	250	300	10	C	6	19	150	2	3	180	110	35	W250x18 - W250x58
WP12	200	350	12	C	6	19	150	2	3	130	140	35	W310x21 - W310x33
WP13	250	350	12	C	6	19	150	2	3	180	140	35	W310x39 - W310x52
WP14				C	6	19	200	2	3	180	140	35	
WP15	250	450	16	D	8	19	150	2	4	180	125	35	W360x33 - W360x57
												35	W410x39 - W410x46
WP16	300	500	20	E	8	19	150	3	3	120	220	35	W460x52 - W460x68
WP17				E	8	19	200	3	3	120	220	35	
WP18				E	8	19	250	3	3	120	220	35	
WP19	300	600	20	F	10	19	250	3	4	100	165	40	
WP20	400	600	20	F	10	19	250	3	4	150	165	40	
WP21	400	600	20	G	12	19	250	3	5	150	125	40	

NOTES:
1. ASSUMED CONCRETE STRENGTH IS fc' = 25 MPa.
2. ASSUMED ANCHORS ARE NELSON SHEAR STUD Fu = 450MPa
2. Mf (NOM) BASED ON A CONNECTION OFFSET (OUTWARDS FROM THE FACE OF PLATE) OF 65mm USED AS PER CSA A23.3 CONNECTIONS.
3. NO LATERAL ECCENTRICITY HAS BEEN ASSUMED, IF THERE ARE CONSTRUCTION ERRORS THIS TABLE IS NOT VALID.
4. THIS TABLE DOES NOT ACCOUNT FOR ANY STANDOFF OF THE PLATE FROM THE CONCRETE SURFACE.
5. CALCULATION BASED ON ACI 318-08 USING HILTI PROFIS ANCHOR 2.4.3 SOFTWARE.

COMPRESSION-TENSION DEVELOPMENT AND LAP LENGTHS Fy = 400 MPa — T-C56A

NOTES
1. STANDARD ABBREVIATIONS ON PLANS AND SCHEDULES SHOULD BE AS FOLLOWS
CLS - COMPRESSION LAP SPLICE
CDL - COMPRESSION DEVELOPMENT LENGTH
HEL - HOOK EMBEDMENT LENGTH

COMPRESSION LAP SPLICE AND DEVELOPMENT LENGTHS (Fy = 400 MPa)

CLS: COMPRESSION LAP SPLICE LENGTH

UNCOATED BLACK BAR							
10M	15M	20M	25M	30M	35M	45M	55M
330	470	570	740	880	1050	1280	1650

CDL: COMPRESSION DEVELOPMENT LENGTH

fc'	UNCOATED BLACK BAR							
	10M	15M	20M	25M	30M	35M	45M	55M
20MPa	250	340	420	540	640	770	940	1210
25MPa	220	310	380	480	570	690	840	1080
30MPa	200	280	340	440	530	630	770	990
35MPa	200	280	340	440	530	630	770	990
40MPa	200	280	340	440	530	630	770	990
> 40 MPa	SEE MINUMUM VALUES IN ROW ABOVE							

NOTES:
1. IF BUNDLED BARS ARE USED THE VAULES IN THE TABLES MUST BE INCREASED:
a. MULTIPLY BY 1.1 (TWO BAR BUNDLES)
b. MULTIPLY BY 1.2 (THREE BAR BUNDLES)
c. MULTIPLY BY 1.33 (FOUR BAR BUNDLES)

HEL: STANDARD HOOK TENSION EMBEDMENT LENGTHS

fc'	UNCOATED BLACK BAR					
	10M	15M	20M	25M	30M	35M
20MPa	260	360	440	570	670	800
25MPa	230	320	390	510	600	720
30MPa	210	300	360	470	550	660
35MPa	200	280	330	430	510	610
40MPa	180	260	310	400	480	570
45MPa	170	240	300	380	450	540
50MPa	160	230	280	360	430	510
55MPa	160	220	270	340	410	490

NOTES:
1. FOR EPOXY COATED BARS THE VALUES IN THE TABLES MUST BE INCREASED:
a. MULTIPLY BY 1.2 (WHEN CLEAR COVER GREATER THAN 3 X BAR DIAMETER AND CLEAR SPACING GREATER THAN 6 X BAR DIAMETER)
b. MULTIPLY BY 1.5 (WHEN COVER OR SPACING ARE LESS THAN ABOVE)
2. VALUES PROVIDED ARE BASED ON NORMAL WEIGHT CONCRETE AND MUST BE INCREASED FOR LIGHTWEIGHT CONCRETES:
a. MULTIPLY BY 1.2 (FOR SEMI-LOW DENSITY CONCRETE)
b. MULTIPLY BY 1.3 (FOR LOW-DENSITY CONCRETE)

TENSION DEVELOPMENT AND LAP LENGTHS Fy = 400 MPa — T-C56B

NOTES
1. STANDARD ABBREVIATIONS ON PLANS AND SCHEDULES SHOULD BE AS FOLLOW
TLS - TENSION LAP SPLICE
TDL - TENSION DEVELOPMENT LENGTH

TENSION LAP SPLICE AND DEVELOPMENT LENGTHS (Fy = 400 MPa)

TLS: TENSION LAP SPLICE LENGTH (CLASS B)

fc'	UNCOATED BLACK BAR											
	10M		15M		20M		25M		30M		35M	
	Top	Bottom	Top	Bottom	Top	Bottom	Top	Bottom	Top	Bottom	Top	Bottom
20MPa	620	480	880	670	1070	820	1720	1320	2040	1560	2430	1870
25MPa	550	430	780	600	950	740	1530	1180	1820	1400	2170	1680
30MPa	510	390	720	550	870	670	1400	1080	1660	1280	1980	1530
35MPa	470	360	660	510	810	620	1300	1000	1540	1190	1840	1420
40MPa	440	340	620	480	760	580	1210	940	1440	1110	1720	1330
45MPa	410	320	590	450	710	550	1140	880	1360	1050	1620	1250
50MPa	390	300	560	430	680	520	1090	840	1290	990	1540	1190
55MPa	380	300	530	410	640	500	1030	800	1230	950	1470	1130
60MPa	360	300	510	390	620	480	990	770	1180	910	1400	1080
65MPa	350	300	490	380	590	460	950	740	1130	870	1350	1040

TDL: TENSION DEVELOPMENT LENGTH

fc'	UNCOATED BLACK BAR											
	10M		15M		20M		25M		30M		35M	
	Top	Bottom	Top	Bottom	Top	Bottom	Top	Bottom	Top	Bottom	Top	Bottom
20MPa	480	360	670	520	820	630	1320	1020	1560	1210	1870	1440
25MPa	430	330	600	470	740	570	1180	910	1400	1080	1680	1290
30MPa	390	300	550	430	670	520	1080	830	1280	990	1530	1180
35MPa	360	300	510	390	620	480	1000	770	1190	910	1420	1090
40MPa	340	300	480	370	580	450	940	720	1110	860	1330	1020
45MPa	320	300	450	350	550	420	880	680	1050	810	1250	960
50MPa	300	300	430	330	520	400	840	650	990	770	1190	910
55MPa	300	300	410	320	500	380	800	620	950	730	1130	870
60MPa	300	300	390	300	480	370	770	590	910	700	1080	830
65MPa	300	300	380	300	460	360	740	570	870	680	1040	800

NOTES:
1. FOR EPOXY COATED BARS THE VALUES IN THE TABLES MUST BE INCRESED:
a. MULTIPLY BY 1.2 (WHEN CLEAR COVER GREATER THAN 3 X BAR DIAMETER AND CLEAR SPACING GREATER THAN 6 X BAR DIAMETER)
b. MULTIPLY BY 1.5 (WHEN COVER OR SPACING ARE LESS THAN ABOVE)
2. VALUES PROVIDED ARE BASED ON NORMAL WEIGHT CONCRETE AND MUST BE INCREASED FOR LIGHTWEIGHT CONCRETES:
a. MULTIPLY BY 1.2 (FOR SEMI-LOW DENSITY CONCRETE)
b. MULTIPLY BY 1.3 (FOR LOW-DENSITY CONCRETE)
3. IF BUNDLED BARS ARE USED THE VAULES IN THE TABLES MUST BE INCREASED:
a. MULTIPLY BY 1.1 (TWO BAR BUNDLES)
b. MULTIPLY BY 1.2 (THREE BAR BUNDLES)
c. MULTIPLY BY 1.33 (FOUR BAR BUNDLES)

TENSION AND COMPRESSION DEVELOPMENT AND LAP LENGTHS Fy = 500 MPa — T-C57A

NOTES
1. STANDARD ABBREVIATIONS ON PLANS AND SCHEDULES SHOULD BE AS FOLLOWS

CLS - COMPRESSION LAP SPLICE
CDL - COMPRESSION DEVELOPMENT LENGTH
HEL - HOOK EMBEDMENT LENGTH

COMPRESSION LAP SPLICE AND DEVELOPMENT LENGTHS (Fy = 500 MPa)

CLS: COMPRESSION LAP SPLICE LENGTH

UNCOATED BLACK BAR							
10M	15M	20M	25M	30M	35M	45M	55M
490	680	830	1080	1280	1520	1840	2400

CDL: COMPRESSION DEVELOPMENT LENGTH

fc'	UNCOATED BLACK BAR							
	10M	15M	20M	25M	30M	35M	45M	55M
20MPa	310	430	530	680	810	960	1180	1520
25MPa	280	390	470	610	720	860	1050	1360
30MPa	250	360	430	560	660	790	970	1250
35MPa	250	360	430	560	660	790	970	1250
40MPa	250	360	430	560	660	790	970	1250
> 40 MPa	SEE MINUMUM VALUES IN ROW ABOVE							

NOTES:
1. IF BUNDLED BARS ARE USED THE VAULES IN THE TABLES MUST BE INCREASED:
a. MULTIPLY BY 1.1 (TWO BAR BUNDLES)
b. MULTIPLY BY 1.2 (THREE BAR BUNDLES)
c. MULTIPLY BY 1.33 (FOUR BAR BUNDLES)

HEL: STANDARD HOOK TENSION EMBEDMENT LENGTHS

fc'	UNCOATED BLACK BAR					
	10M	15M	20M	25M	30M	35M
20MPa	320	450	550	710	840	1000
25MPa	290	400	490	630	750	900
30MPa	260	370	450	580	690	820
35MPa	240	340	420	540	640	760
40MPa	230	320	390	500	600	710
45MPa	220	300	370	470	560	670
50MPa	200	290	350	450	530	640
55MPa	200	270	330	430	510	610

NOTES:
1. FOR EPOXY COATED BARS THE VALUES IN THE TABLES MUST BE INCREASED:
a. MULTIPLY BY 1.2 (WHEN CLEAR COVER GREATER THAN 3 X BAR DIAMETER AND CLEAR SPACING GREATER THAN 6 X BAR DIAMETER)
b. MULTIPLY BY 1.5 (WHEN COVER OR SPACING ARE LESS THAN ABOVE)
2. VALUES PROVIDED ARE BASED ON NORMAL WEIGHT CONCRETE AND MUST BE INCREASED FOR LIGHTWEIGHT CONCRETES:
a. MULTIPLY BY 1.2 (FOR SEMI-LOW DENSITY CONCRETE)
b. MULTIPLY BY 1.3 (FOR LOW-DENSITY CONCRETE)

TENSION AND COMPRESSION DEVELOPMENT AND LAP LENGTHS Fy = 500 MPa — T-C57B

NOTES
1. STANDARD ABBREVIATIONS ON PLANS AND SCHEDULES SHOULD BE AS FOLLOW
TLS - TENSION LAP SPLICE
TDL - TENSION DEVELOPMENT LENGTH

TENSION LAP SPLICE AND DEVELOPMENT LENGTHS (Fy = 500 MPa)

TLS: TENSION LAP SPLICE LENGTH (CLASS B)

fc'	UNCOATED BLACK BAR											
	10M		15M		20M		25M		30M		35M	
	Top	Bottom	Top	Bottom	Top	Bottom	Top	Bottom	Top	Bottom	Top	Bottom
20MPa	600	770	840	1090	1030	1330	1650	2150	1960	2550	2340	3040
25MPa	530	690	750	980	920	1190	1480	1920	1750	2280	2090	2720
30MPa	490	630	690	890	840	1090	1350	1750	1600	2080	1910	2480
35MPa	450	590	640	830	780	1010	1250	1620	1480	1930	1770	2300
40MPa	420	550	600	770	730	940	1170	1520	1390	1800	1660	2150
45MPa	400	520	560	730	690	890	1100	1430	1310	1700	1560	2030
50MPa	380	490	530	690	650	840	1050	1360	1240	1610	1480	1920
55MPa	360	470	510	660	620	800	1000	1300	1180	1540	1410	1840
60MPa	350	450	490	630	590	770	960	1240	1130	1470	1350	1760
65MPa	330	430	470	600	570	740	920	1190	1090	1420	1300	1690

TDL: TENSION DEVELOPMENT LENGTH

fc'	UNCOATED BLACK BAR											
	10M		15M		20M		25M		30M		35M	
	Top	Bottom	Top	Bottom	Top	Bottom	Top	Bottom	Top	Bottom	Top	Bottom
20MPa	460	600	650	840	790	1030	1270	1650	1510	1960	1800	2340
25MPa	410	530	580	750	710	920	1140	1480	1350	1750	1610	2090
30MPa	380	490	530	690	650	840	1040	1350	1230	1600	1470	1910
35MPa	350	450	490	640	600	780	960	1250	1140	1480	1360	1770
40MPa	330	420	460	600	560	730	900	1170	1070	1390	1280	1660
45MPa	310	400	430	560	530	690	850	1100	1010	1310	1200	1560
50MPa	290	380	410	530	500	650	810	1050	960	1240	1140	1480
55MPa	280	360	390	510	480	620	770	1000	910	1180	1090	1410
60MPa	270	350	380	490	460	590	740	960	870	1130	1040	1350
65MPa	260	330	360	470	440	570	710	920	840	1090	1000	1300

NOTES:
1. FOR EPOXY COATED BARS THE VALUES IN THE TABLES MUST BE INCRESED:
a. MULTIPLY BY 1.2 (WHEN CLEAR COVER GREATER THAN 3 X BAR DIAMETER AND CLEAR SPACING GREATER THAN 6 X BAR DIAMETER)
b. MULTIPLY BY 1.5 (WHEN COVER OR SPACING ARE LESS THAN ABOVE)
2. VALUES PROVIDED ARE BASED ON NORMAL WEIGHT CONCRETE AND MUST BE INCREASED FOR LIGHTWEIGHT CONCRETES:
a. MULTIPLY BY 1.2 (FOR SEMI-LOW DENSITY CONCRETE)
b. MULTIPLY BY 1.3 (FOR LOW-DENSITY CONCRETE)
3. IF BUNDLED BARS ARE USED THE VAULES IN THE TABLES MUST BE INCREASED:
a. MULTIPLY BY 1.1 (TWO BAR BUNDLES)
b. MULTIPLY BY 1.2 (THREE BAR BUNDLES)
c. MULTIPLY BY 1.33 (FOUR BAR BUNDLES)

TYPICAL FOUNDATION WALL AGAINST SHORING — T-F02

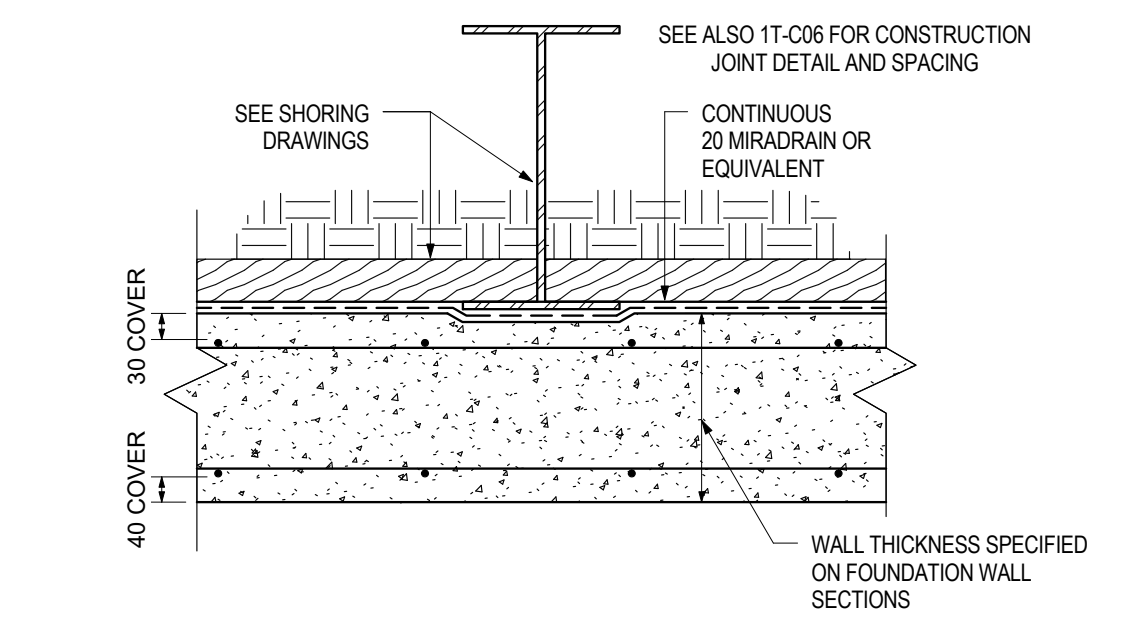

TYPICAL DETAIL OF FOUNDATION WALL
AGAINST SHORING

TYPICAL STEPPED FOOTING DETAILS — T-F09

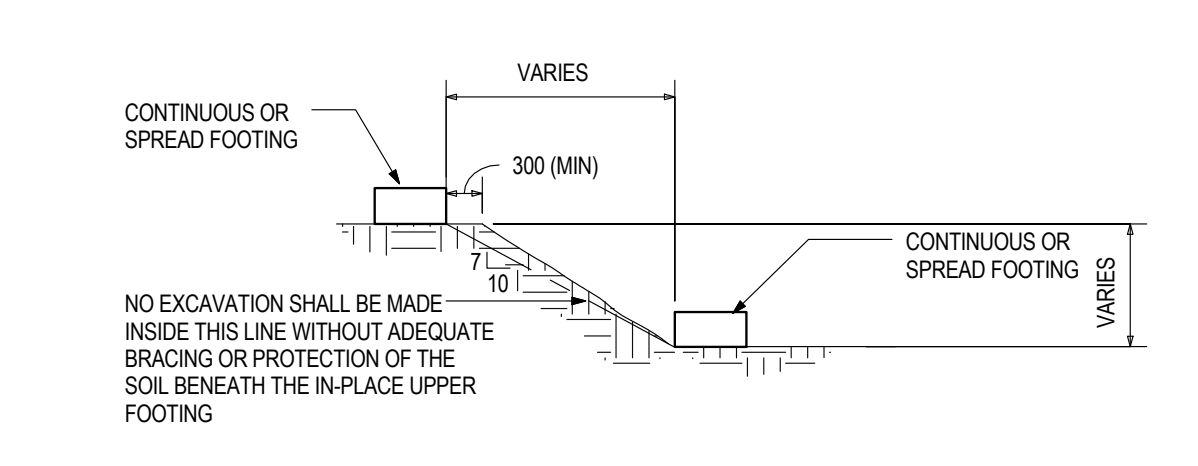

TYPICAL DETAIL OF SLOPE BETWEEN
FOOTING AND ADJACENT CONSTRUCTION

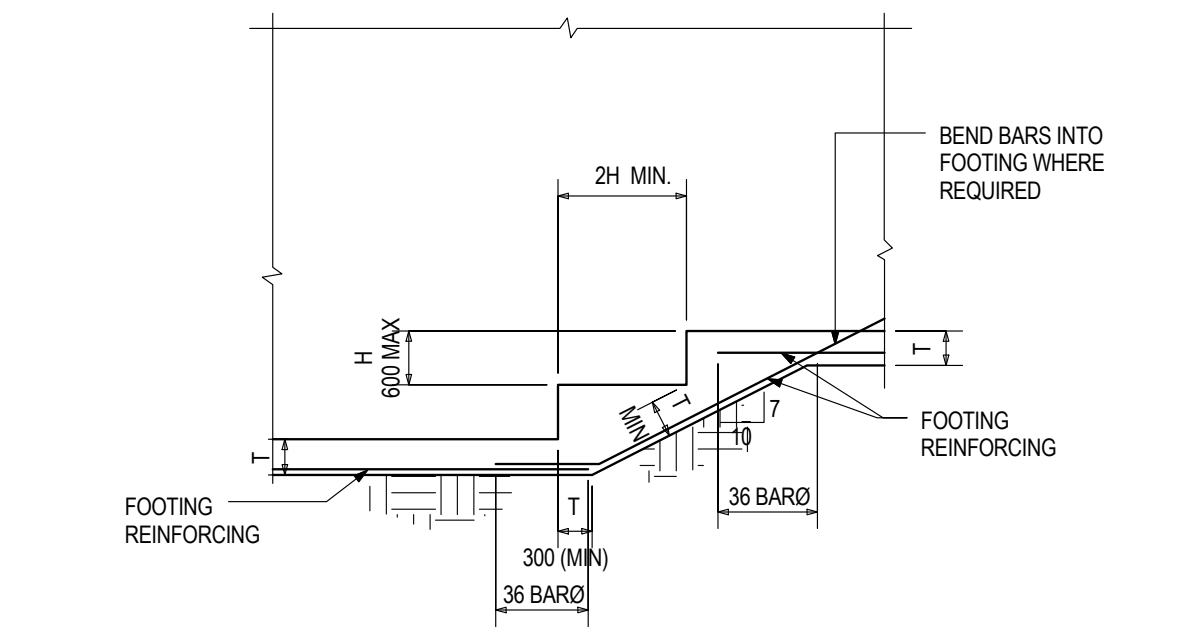

TYPICAL DETAIL OF STEPPED WALL FOOTING

TYPICAL FOOTING ON BEDROCK — T-F10

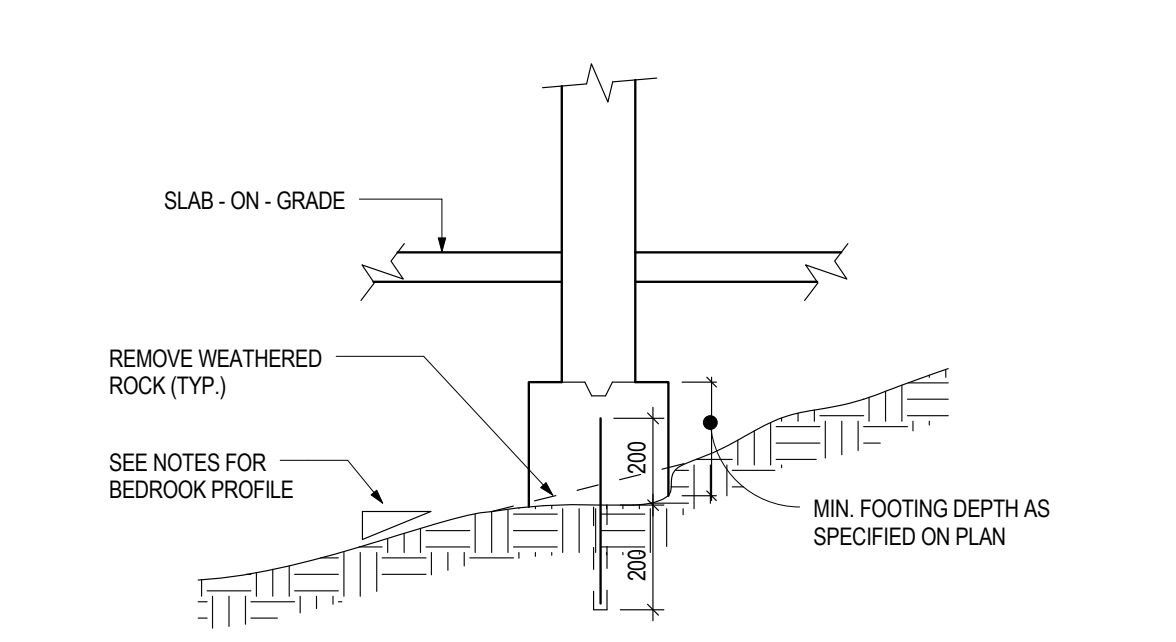

TYPICAL SECTION THROUGH WALL FOOTINGS

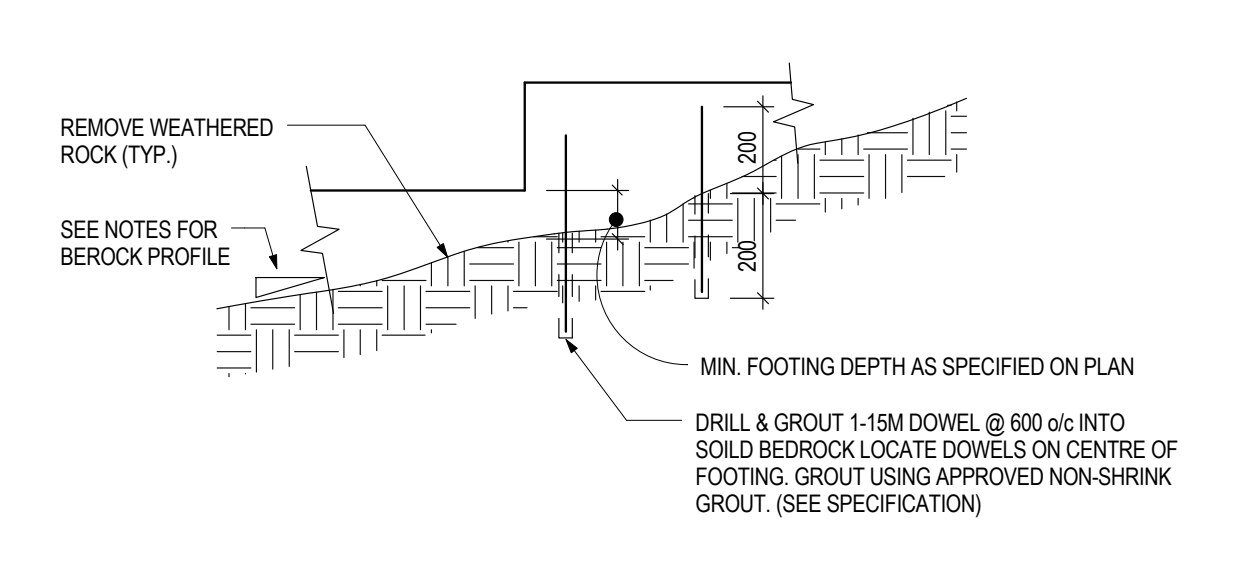

TYPICAL ELEVATION OF FOOTING
FOR FOUNDATION WALLS

NOTES:
FOR BEDROCK PROFILE UP TO 1 IN 4 - NO DOWELS REQUIRED
FOR BEDROCK PROFILE FROM 1 IN 4 TO 1 IN 2 - PROVIDE DOWELS
FOR BEDROCK PROFILE GREATER THAN 1 IN 2 - CUT ROCK TO MAX. 1 IN 2.

NON-LOAD BEARING BLOCK WALL LINTELS — T-M01

* ALTERNATIVES WHERE EXPOSED FACE OF SINGLE ANGLE IS NOT ACCEPTABLE:-
1. REINFORCED MASONRY LINTEL BLOCKS (SEE LINTEL NOTES)
2. DOUBLE ANGLES (SEE BELOW) (CUT BLOCKS TO SUIT)

NON-LOAD BEARING BLOCK WALL LINTELS

	T. NOMINAL \ CLEAR SPAN	300 TO 550 (12" TO 22")	550 TO 1220 (22" TO 4'-0")	1220 TO 1830 (4'-0" TO 6'-0")	1830 TO 2440 (6'-0" TO 8'-0")	2440 TO 3080 (8'-0" TO 10'-0")	3080 TO 3660 (10'-0" TO 12'-0")
	100	75x8 PL.	* 1L-90x90x6	* 1L-125x90x8 (LLV)	* 1L-125x90x8 (LLV)	N/A	N/A
	(4")	3x 5/16 PL.	* 1L-3½x3½x¼	* 1L-5x3½x 5/16 (LLV)	* 1L-5x3½x 5/16 (LLV)	N/A	N/A
	150	125x8 PL.	* 1L-125x90x6 (LLH)	* 1L-125x125x8	* 1L-125x125x8	* 1L-125x125x8	N/A
	(6")	5x 5/16 PL.	* 1L-5x3½x¼ (LLH)	* 1L-5x5x 5/16	* 1L-5x5x 5/16	* 1L-5x5x 5/16	N/A
	200	175x8 PL.	2Ls-90x90x6	2Ls-125x90x8 (LLV)	2Ls-125x90x8 (LLV)	W200x27 + 175x6 PL. BOTTOM	W200x27 + 175x6 PL. BOTTOM
	(8")	7x 5/16 PL.	2Ls-3½x3½x¼	2Ls-5x3½x 5/16 (LLV)	2Ls-5x3½x 5/16 (LLV)	W18x18 + 7x¼ PL. BOTTOM	W18x18 + 7x¼ PL. BOTTOM
	250	225x8 PL.	2Ls-100x90x6 (LLH)	2Ls-100x100x8	2Ls-150x100x8 (LLV)	W200x27 + 225x6 PL. BOTTOM	W200x27 + 225x6 PL. BOTTOM
	(10")	9x 5/16 PL.	2Ls-4x3½x¼ (LLH)	2Ls-4x4x 5/16	2Ls-6x4x 5/16 (LLV)	W18x18 + 9x¼ PL. BOTTOM	W18x18 + 9x¼ PL. BOTTOM
	300	275x8 PL.	3Ls-90x90x6	3Ls-125x90x8 (LLV)	N/A	N/A	N/A
	(12")	11x 5/16 PL.	3Ls-3½x3½x¼	3Ls-5x3½x 5/16 (LLV)	N/A	N/A	N/A
* ALT. 2.	100	N/A	2Ls-45x45x5	2Ls-55x35x6 (LLV)	N/A	N/A	N/A
	(4")	N/A	2Ls-1¾x1¾x 3/16	2Ls-2½x1½x¼ (LLV)	N/A	N/A	N/A
	150	N/A	2Ls-65x65x6	2Ls-90x65x6 (LLV)	2Ls-90x65x6 (LLV)	N/A	N/A
	(6")	N/A	2Ls-2½x2½x¼	2Ls-3½x2½x¼ (LLV)	2Ls-3½x2½x¼ (LLV)	N/A	N/A

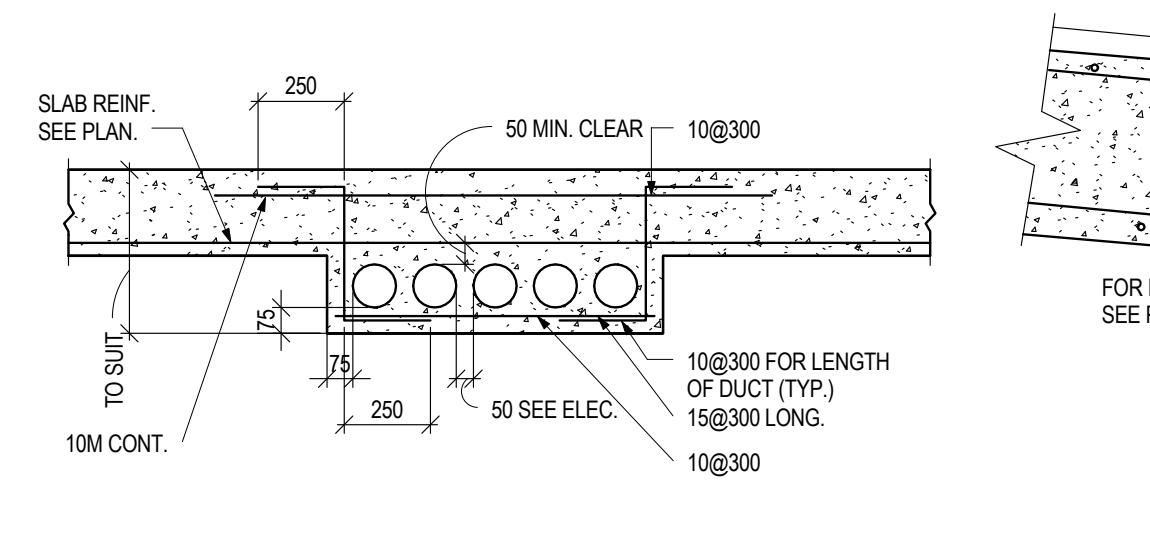

TYPICAL CONCRETE ENCASED ELECTRICAL DUCT BANKPOURED MONOLITHICALLY WITH SLAB

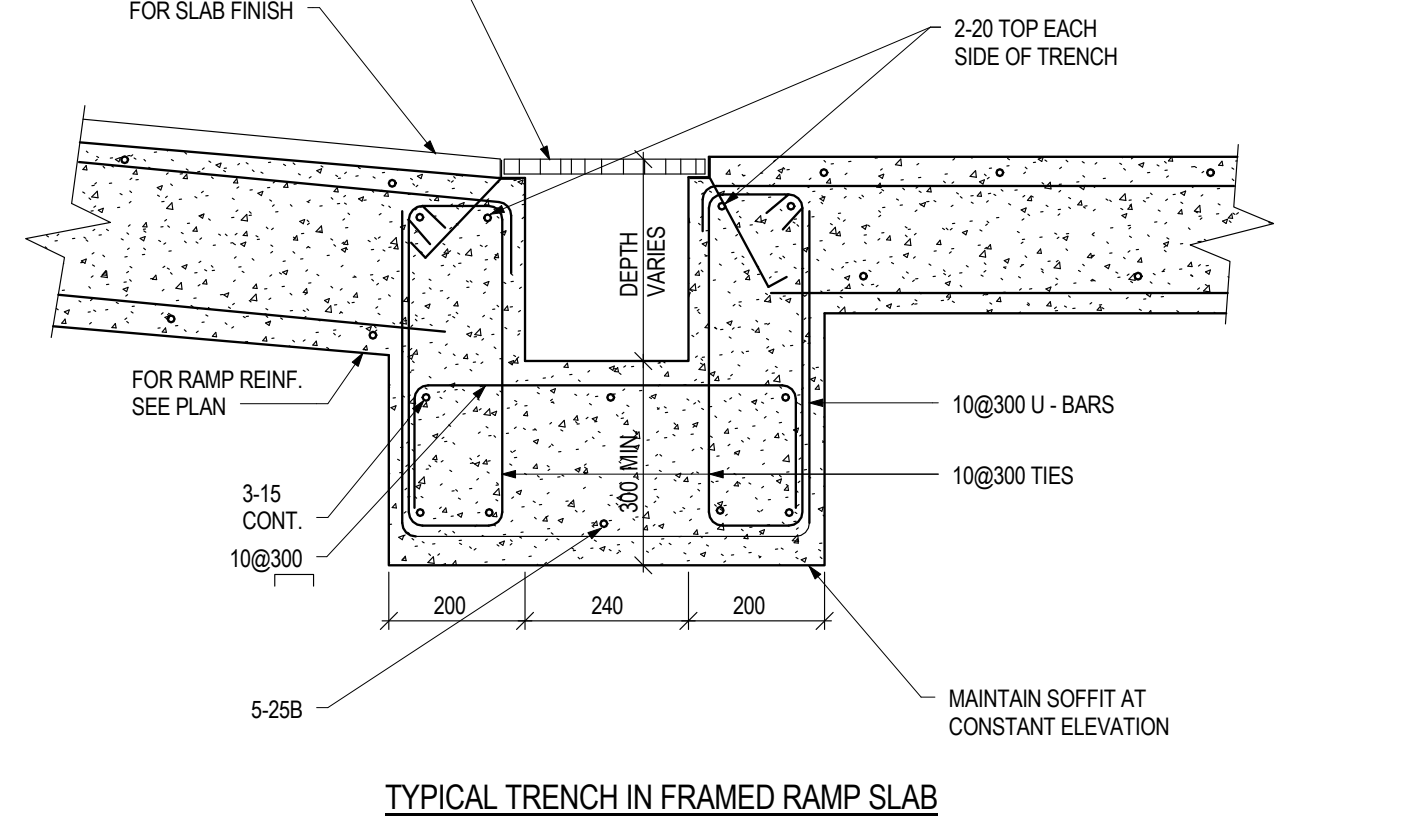

TYPICAL TRENCH IN FRAMED RAMP SLAB

Contractor Must Check And Verify All Dimensions On The Job.

Do Not Scale The Drawings.

All Drawings, Specifications And Related Documents Are The Copyright Of The Architect And Must Be Returned Upon Request.

Reproduction Of Drawings, Specifications And Related Documents In Part Or Whole Is Forbidden Without The Architects Written Permission.

This Drawing Is Not To Be Used For Construction Until Signed ByThe Architect.

Date:

DEC.18,2015 DEC.18,2015

stephenson ENGINEERING
2550 Victoria Park Ave. Suite 602
Toronto ON M2J 5A9 | Tel: (416) 635 9970
www.stephenson-eng.com | info@stephenson-eng.com

No	Revision	Date

No	Issued For	Date
7	ISSUED FOR STEEL TENDER	DEC.18,2015
4	BUILDING PERMIT RESUBMISSION	SEPT.21,2015
3	BUILDING PERMIT RESUBMISSION	JULY 22,2015
2	BUILDING PERMIT SUBMISSION	JUNE 12,2015
1	ISSUED FOR WT REVIEW	MAY 01,2015

AQUAVISTA
AT BAYSIDE TORONTO

Drawing Title
TYPICAL DETAILS

Project
Hines TRIDEL®
AQUAVISTA
Block 3 - R3 & R4
Merchant's Whart
Toronto, ON

Scale: 1 : 1
Drawn by: Author
Checked by: BBS
Project No.: 20140031
Date: DEC.18,2015
Drawing No.: S8-02