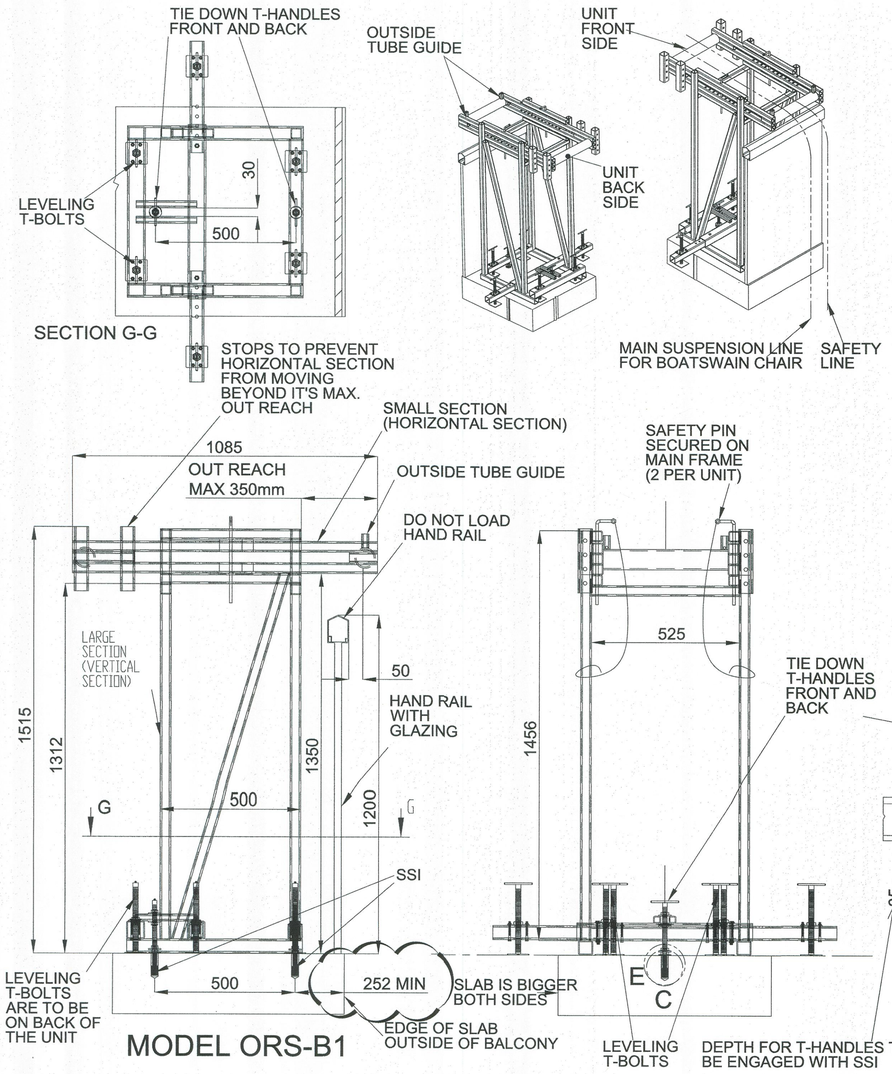

USAGE NOTE FOR ORS - B1
INSTRUCTIONS FOR INSTALLATION & USE OF THE OVER RAIL SUPPORT (ORS) ON A BALCONY:
BOATSWAIN CHAIR USE ONLY

1. (A) LOWERING ORS TO WORK STATION:
   LOWER THE ORS TO DESIRED LOCATION ON THE OUTSIDE OF THE BUILDING, MAKING SURE IT IS ALL TIED BACK TO ANCHOR POINTS WHEN LOWERING.
   (B) CARRYING THE ORS THROUGH THE LIVING QUARTERS:
   CARRY THE ORS THROUGH THE LIVING QUARTERS IN PIECES, MAKING SURE SUITE OWNER'S PROPERTY IS NOT DAMAGED.
2. REMOVE ANY DEBRIS IN THE AREA OF THE THREADED PLASTIC INSERTS AND REMOVE THE THREADED PLASTIC INSERTS FROM THE THREADED STAINLESS STEEL INSERTS (SSI) ADHERED TO THE CONCRETE SLAB.
3. SET UP THE LARGE SECTION (VERTICAL SECTION) OF THE ORS ABOVE THE SSI AND LINE UP THE HOLES IN THE BOTTOM PART OF THE ORS WITH THE SSI. SECURE THE ORS TO THE SSI USING THE SUPPLIED T-HANDLES. MAKE SURE THE TIE DOWN T-HANDLES FRONT AND BACK ARE FULLY ENGAGED (SEE FIG. 1). INSERT THE SMALLER SECTION (HORIZONTAL SECTION) INTO THE LARGER SECTION (VERTICAL SECTION). AND INSERT SAFETY PINS AT THE REQUIRED PROJECTION BEYOND THE HAND RAIL, SO AS NOT TO LOAD THE TOP OF THE HAND RAIL. APPROXIMATELY 50 MM (2") PROJECTION OF THE HORIZONTAL COMPONENT BEYOND THE EXTERNAL PART OF THE HAND RAIL IS USUALLY SUFFICIENT. THE ORS UNIT HAS A STOP TO PREVENT IT FROM MOVING OUT BEYOND ITS LIMIT MAXIMUM PROJECTION.
4. BEFORE THE WORKING ROPES ARE USED, MAKE SURE THE ORS UNIT IS TIED BACK TO THE SAME ANCHOR AS THE SAFETY LINE. PLACE THE TWO WORKING ROPES BETWEEN THE TWO OUTSIDE TUBE GUIDE AND DESCEND AS REQUIRED.
5. REVERSE THE PROCEDURE WHEN DISASSEMBLING ORS. MAKE SURE THE THREADED PLASTIC INSERTS ARE INSTALLED IN THE SSI TO PREVENT THE CLOGGING UP OF THE SSI. SEE FIG.2
6. THIS ORS UNIT CANNOT BE USED AS A SUPPORT FOR THE MAIN SUSPENSION CABLE FOR SUSPENSION STAGES, SINGLE MAN CAGE, OR ANY OTHER SUSPENSION PLATFORM.

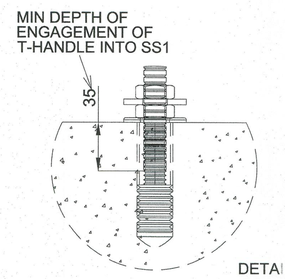

FIG.1

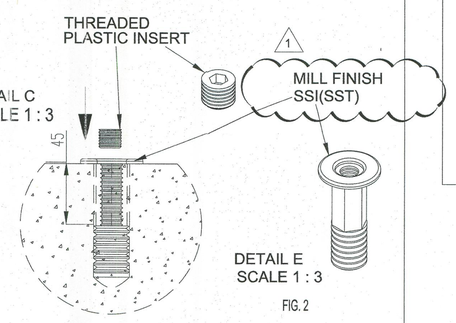

FIG. 2

N ORS INSERTS FOR MODEL ORS-B1 @ BALCONY

1 / WC6.01 DETAIL Scale 1:10

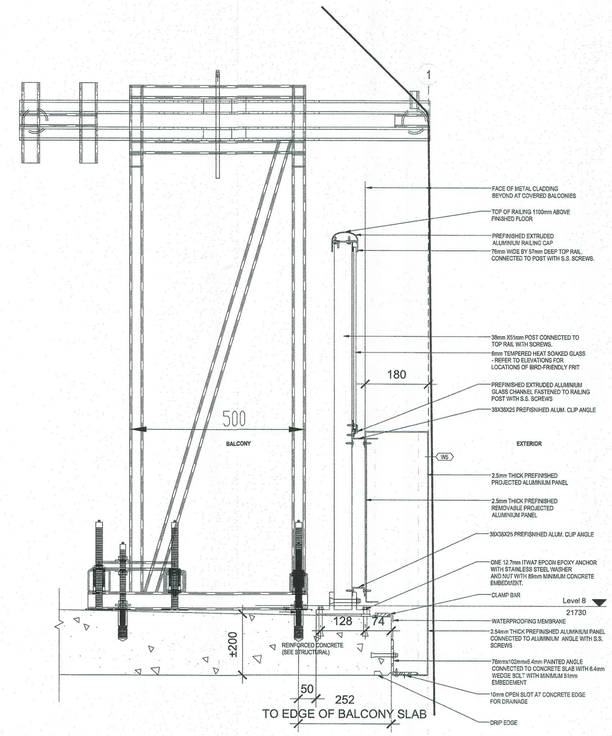

N ORS INSERTS FOR MODEL ORS-B1 AT BALCONY EDGE

2 / WC6.01 SECTION Scale 1:8

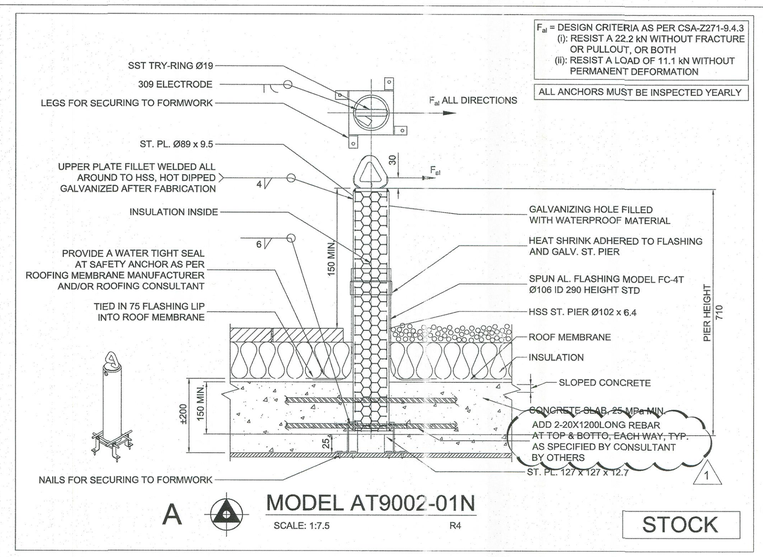

A MODEL AT9002-01N
SCALE: 1:7.5 R4
STOCK

3 / WC6.01 DETAIL Scale 1:8

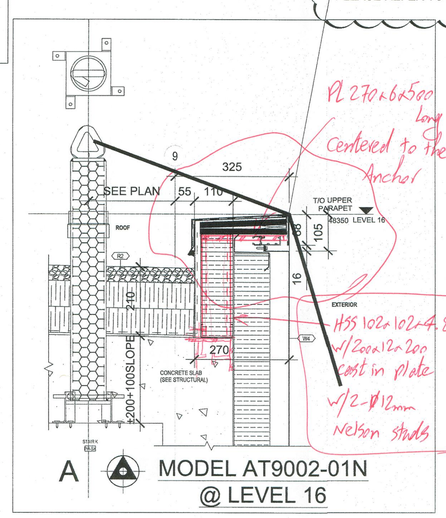

A MODEL AT9002-01N @ LEVEL 16

4 / WC6.01 SECTION Scale 1:8

DRAWING REVIEW
The review of this drawing does not in any way relieve the contractor of responsibility for its accuracy or for compliance with the contract documents.
No Comment | See Comment | Amend & Resubmit | Rejected See Remark
Submission no. 1305
Project no.
By HP
Date Nov 27, 2015
JABLONSKY AST & PARTNERS Consulting Engineers
1129 Lotten St. Don Mills ON M3C 2K5

NO.	DATE	REVISIONS	BY
1	OCT 20/2015	UPDATED AS PER REVIEW COMMENTS ON 2015-07-02	H.L.
0.1	MAY 15/2015	UPDATED PER REVIEW COMMENTS	H.L.
0	JAN 12/2015	SHOP DWGS ISSUED	H.L.

UNITS ARE IN MM UNLESS OTHERWISE NOTED

N

LICENSED PROFESSIONAL ENGINEER J. BUDZIAK OCT 27 2015 PROVINCE OF ONTARIO

ANKOR ENGINEERING SYSTEMS LTD.
BUILDING FAÇADE & SAFETY SYSTEMS ENGINEERING, MANUFACTURING, & INSTALLATION
ADDRESS: 32 PENN DRIVE, TORONTO ON, M9L 2A9
TELEPHONE: (416) 740-5761
FAX: (416) 740-5850
EMAIL: ANKORENG@ANKOR.CA
WEB: WWW.ANKOR.CA

TITLE:	SECTIONS AND DETAILS
PROJECT:	SQ ALEXANDRA PARK - BLOCK 11 38 CAMERON ST., TORONTO, ON.
CLIENT:	TRIDEL

SCALE:	AS SHOWN	DATE:	JAN 12/2015
DRAWN:	H.L.	CHECKED:	J.B.
JOB No.:	J14096	DWG No.:	WC6.01