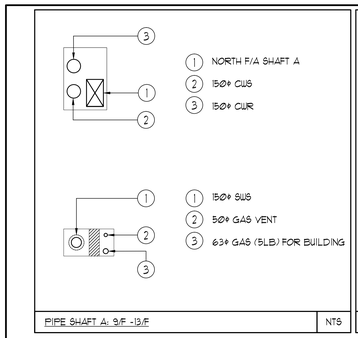

PIPE SHAFT A: 9/F -13/F — NTS

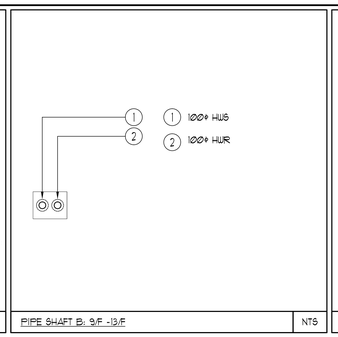

PIPE SHAFT B: 9/F -13/F — NTS

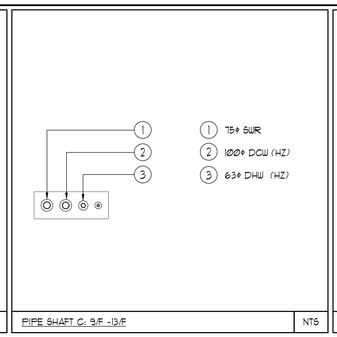

PIPE SHAFT C: 9/F -13/F — NTS

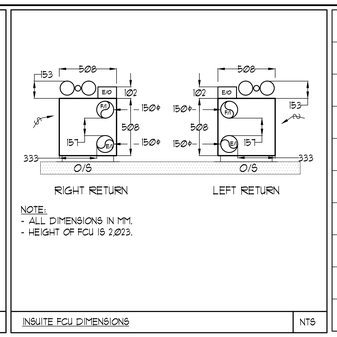

NOTE:
- ALL DIMENSIONS IN MM.
- HEIGHT OF FCU IS 2,023.

INSUITE FCU DIMENSIONS — NTS

UNIT	NAME	AREA (SQ. FT.)	# OF WR	# OF POWDER	SIZE (T)	FIXTURE UNITS	BR	SQ. FT/T
1201	1A+MR	525	1	Ø	1	10	1	525
1205	3A	870	2	Ø	2	16	3	435
1208	3AR	870	2	Ø	2	16	3	435
1211	1C+D3	590	2	Ø	1	16	1	590
1212	1C+D3	590	2	Ø	1	16	1	590
1219	3ST	895	2	Ø	2	16	2	448
1220	2B+DT	1000	2	1	1.5	22	2	667
1221	2LTR	755	2	Ø	1.5	16	2	503
1229	1A+M1	580	1	Ø	1	10	1	580

GENERAL NOTES:

1) CONTRACTOR SHALL CO-ORDINATE ARCHITECTURAL, STRUCTURAL, LIGHTING, HVAC, SPRINKLER DRAWINGS TO AVOID AREAS OF CONFLICT AND TO MAINTAIN CEILING HEIGHTS.

2) CONTRACTOR SHALL REPORT ALL DISCREPANCIES AND AREA OF CONFLICTS TO THE ENGINEER PRIOR TO WORK BEGINS.

3) PROVIDE EXPANSION CHAMBERS FOR ALL KITCHEN SINKS.

4) SEE INSTALLATION DETAILS DRAWING FOR WASHER DOM. H+C WATER, SANITARY CONNECTION DETAILS.

5) SUPPLY AND INSTALL COMPLETE DOMESTIC HOT AND COLD WATER LINES, SANITARY AND VENT LINES TO EACH FIXTURE /EQUIPMENT INCLUDING WATER CLOSETS, LAVATORIES, BATHS, SHOWERS, KITCHEN SINK, WASHING MACHINES, DISHWASHERS, AND FLOOR DRAINS. KITCHEN SINK, LAVATORIES, WATER CLOSETS AND WASHING MACHINE TO BE C/W LOCALIZED SHUT-OFF VALVES.

6) ALL VENT PIPE INSTALLATION TO COMPLY WITH PLUMBING CODES.

7) FOR D.H.C. W. RISER SIZES, REFER TO RISER DIAGRAM

8) FIRE DAMPERS ARE REQUIRED TO BE LISTED AND ARE TO HAVE FIRE PROTECTION RATING OF THE PENETRATED FIRE SEPARATION.

9) THE PIPING PENETRATING THE VARIOUS FIRE SEPARATION IS REQUIRED TO BE FIRESTOPPED WITH A LISTED FIRESTOPPING MATERIAL IN ACCORDANCE WITH OBC ARTICLE 3.1.9.1

10) THE FIRE HOSE CABINET THAT ARE RECESSED INTO THE EXIT STAIR SHAFTS ARE REQUIRED TO BE SEPARATED FROM THE EXIT STAIR BY A 2 HR. FIRE SEPARATION.

11) NO FLEXIBLE DUCT SHALL BE USED FOR ANY IN-SUITE DUCTWORK.

12) PROVIDE 25MM EXTERNAL INSULATION TO ENTIRE FRESH AIR DUCT FROM EXTERIOR WALL TO ERV FAN COIL UNIT.

13) DRYER EXHAUST DUCT SHALL BE SMOOTH AND CORROSION-RESISTANT MATERIAL (FLEXIBLE CONNECTION IS NOT ACCEPTABLE).

ACOUSTIC NOTES:

1) ALL SYSTEM/DOMESTIC PIPE LOOPS OR OFFSETS WHICH ARE 50MM DIA. AND LARGER SHALL BE ISOLATED USING NEOPRENE-IN-SHEAR HANGERS, AND ADDITIONAL 25 MM THICK RIBBED OR WAFFLED NEOPRENE PADS IN THE SADDLES OF CLEVIS HANGERS.

2) ALL PIPES SMALLER THAN 50MM DIA. SHALL BE ISOLATED WITH 5MM THICK RIBBED OR WAFFLED RUBBER PADS IN HANGER SADDLES.

CLEAR FLOOR TO UNDERSLAB = 2750mm
CLEAR PRODUCT= 2700mm
UNITS 1219/1220: DRAIN FROM TERRACE ON 13/F

NOTES:

1. NORTH F/A SHAFT B SERVING FROM G/F TO 14/F DUCT SERVING CORRIDOR FROM 9/F TO 14/F. SEE PRESSURIZATION /VENTILATION RISER DIAGRAM FOR DETAILS.
2. NORTH F/A SHAFT A SERVING FROM G/F TO 14/F. DUCT SERVING CORRIDOR FROM G/F TO 14/F. SEE PRESSURIZATION /VENTILATION RISER DIAGRAM FOR DETAILS.
3. PIPE SHAFT - REFER TO PIPE DIAGRAM FOR DETAILS.
4. 150ø KITCHEN / DRYER / W/R / FCU INTAKE / FCU EXHAUST DUCT. (TYPICAL UNLESS OTHERWISE NOTED)
5. 100ø RWL DOWN.
6. 100ø STM @1%.
7. 100ø RWL FROM ABOVE.
8. 100ø RWL FROM ABOVE AND DOWN.
9. 600ø GARBAGE CHUTE.
10. 19ø GAS PIPE c/w VALVE AND CAP FOR BBQ.
11. 19ø DCW FOR NFHB TO BE CONNECTED TO SUITE'S MAIN DCW LINE.

DUCT SIZING TABLE
(4.06 m/s, 800 FPM)

DESIGNATION	L/s	DUCT SIZE	DESIGNATION	L/s	DUCT SIZE
A	47	100x150	G	189	350x150
B	71	150x150	H	236	450x150
C	94	200x150	J	283	500x150
D	118	200x150	K	330	600x150
E	141	250x150	L	377	500x200
F	165	300x150			

GRILLE SIZING TABLE

DESIGNATION	SIZE	L/S (UNLESS SPECIFIED ELSEWHERE)
SG-A	300x100	47-70
SG-B	300x150	71-93
SG-C	400x150	94-140
SG-D	450x150	141-188
EG-A	150x150	35
W-1	225x200	210mm(L)
W-2	425x200	INSULATED
W-3	625x200	WALL BOX

VERTICAL FAN COIL SIZE

DESIGNATION	MODEL	W x D
FCU-1T	450	508x660
FCU-1.5T	600	508x660
FCU-2T	800	508x660
FCU-2.5T	1000	559x660
FCU-3T	1200	559x660

NOTE:
A MIN. OF 125mm IS REQUIRED ON THE SIDE OF PIPE RISER.

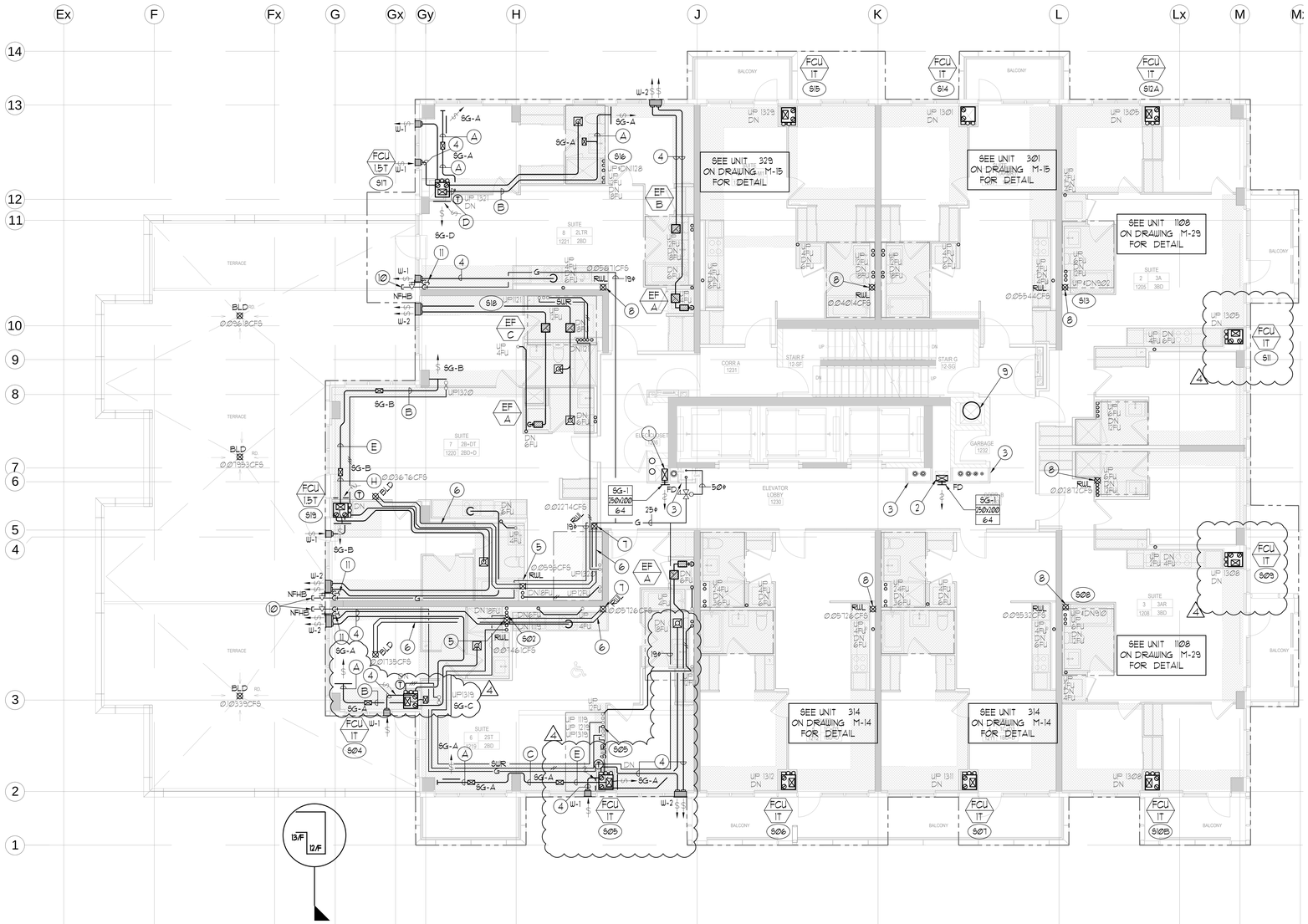

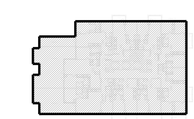

KEY PLAN — N.T.S.

LEGEND
MECHANICAL

SYMBOL	DESCRIPTION
	SUPPLY AIR DIFFUSER
	SUPPLY AIR TROFFER
	LINEAR SUPPLY DIFFUSER
T	THERMOSTAT
S	FAN SWITCH
	RETURN AIR GRILLE
	EXHAUST AIR GRILLE
	SUPPLY DUCT UP
	SUPPLY DUCT DOWN
	RETURN DUCT UP
	RETURN DUCT DOWN
	EXHAUST DUCT UP
	EXHAUST DUCT DOWN
FD	FIRE DAMPER
BD	BALANCING DAMPER
MD	MOTORIZED DAMPER
MFD	MOTORIZED FIRE DAMPER
BDD	BACKDRAFT DAMPER
OBD	OPPOSED BLADE VOLUME CONTROL DAMPER C/W LOCKING QUADRANT
	TURNING VANES
	FLEXIBLE CONNECTION
	ACOUSTIC INSULATION
	TYPE OF EQUIPMENT / EQUIPMENT IDENTIFICATION
	TYPE OF DIFFUSER OR GRILLE / GRILLE SIZE OR DIFFUSER NECK SIZE / AIRFLOW (CFM OR L/s)
	STARTER / 3 PHASE / PHASE /
S	IN-SUITE ERV MASTER SWITCH
S	FAN SWITCH / IN-SUITE ERV OVERRIDE BUTTON
CO	CO SENSOR
G	GAS LINE
G	GAS METER
G	GAS COCK
PR	PRESSURE REDUCING VALVE
	SANITARY ABOVE GRADE
	SANITARY BELOW GRADE
	STORM ABOVE GRADE
	STORM BELOW GRADE
	DOMESTIC COLD WATER
	DOMESTIC HOT WATER
	DOMESTIC HOT WATER RECIRCULATION
	SANITARY VENT
	WATER METER
FD	FLOOR DRAIN
FFD	FUNNEL FLOOR DRAIN
HD	HUB DRAIN
RD	ROOF DRAIN
BLD	BLAB DRAIN
AD	AREA DRAIN
BLAD	BI-LEVEL AREA DRAIN
CB	CATCH BASIN
	SANITARY TRAP
	ELBOW UP
	ELBOW DOWN
CO	WALL CLEANOUT
CO	FLOOR CLEANOUT
HB	HOSE BIBB
NFHB	NON-FREEZE HOSE BIBB
	GLOBE VALVE
	GATE VALVE
	BALL VALVE
	BUTTERFLY VALVE
	PRESSURE REDUCING VALVE
	CHECK VALVE
	CAP
	COMPRESSED AIR OUTLET
	BACKFLOW PREVENTER
	CIRCUIT BALANCING VALVE
	MULTIPLE PIPES / - DENOTES NO. OF PIPES
T	TEMPERATURE SENSOR
T	THERMOMETER
	2-WAY MODULATING VALVE
	3-WAY MODULATING VALVE
	1/2"x4"(D) THERMOWELL C/W 1/2" BUSHING + 1/2" PLUG
	FLOOR ELEVATION ABOVE LEVEL
	FLOOR ELEVATION THIS LEVEL
	HEADROOM (FLOOR TO U/S -BEAM)

DATE	NO.	DESCRIPTION	BY
2017/11/8	4	ISSUED FOR SITE INSTRUCTION #14	E.P.
2016/04/4	3	ISSUED FOR TENDER	E.P.
2014/04/4	2	RE-ISSUED FOR PERMIT	E.P.
2013/09/14	1	ISSUED FOR PERMIT	E.P.

MARK VOID ALL PRINTS DATED PREVIOUS TO FINAL DATE ABOVE

REVISIONS

CONTRACTOR MUST CHECK AND VERIFY ALL DIMENSIONS AND CONDITIONS ON THE JOB AND REPORT DISCREPANCIES TO THE ENGINEERS BEFORE PROCEEDING WITH THE WORK. THIS DRAWING IS THE PROPERTY OF THE ENGINEERS AND MUST BE RETURNED UPON COMPLETION OF THE WORK.

DRAWINGS ARE NOT TO BE SCALED

NOVA TREND ENGINEERING GROUP LTD.

ONTARIO PROFESSIONAL ENGINEER 2013/11/15 ERIC PIER KAI PUN LICENCE OF ONTARIO

115 West Beaver Creek Road, Unit 31
Richmond Hill, Ontario L4B 3M1
Tel: 905 882-5445
Fax: 905 882-5447

DRAWING TITLE:
12/F
MECHANICAL LAYOUT

PROJECT TITLE:
SQ ALEXANDRA PARK
BLOCK 11
318 CAMERON STREET
TORONTO ONTARIO

DRAWN BY:	CHECKED BY:	SCALE:
G.S.	E.P.	1:50
DATE: FEB. 13	PROJECT NUMBER: 1313	DRAWING NUMBER: M-30 OF 43