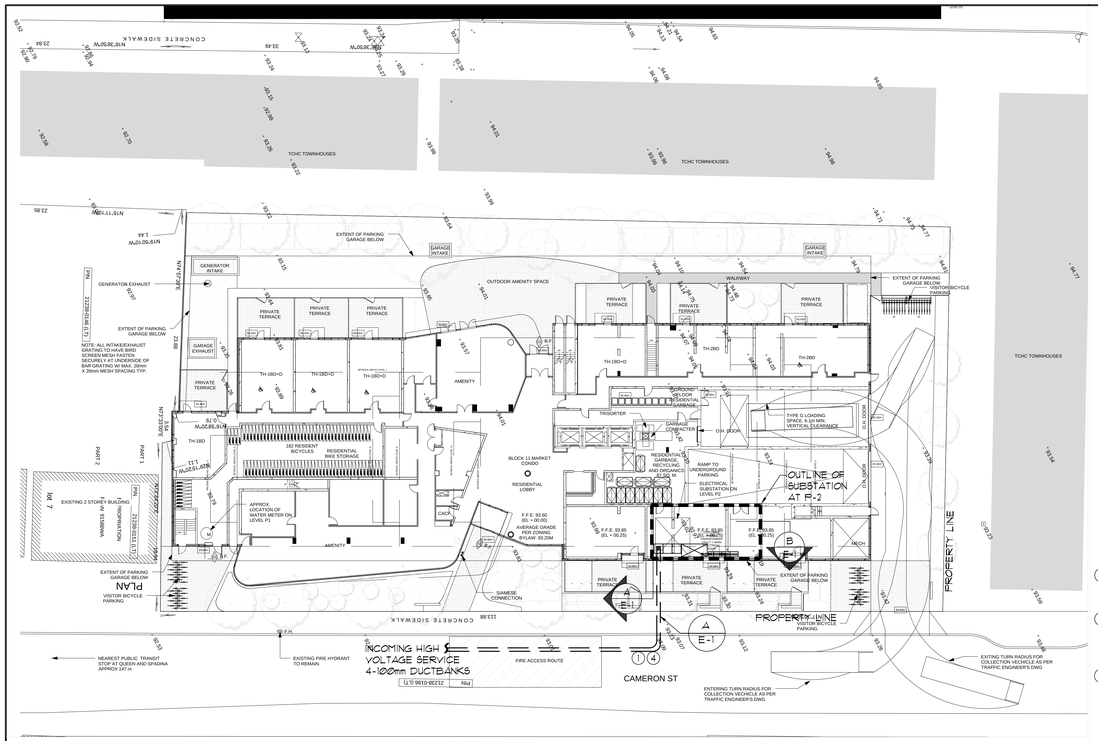

SITE PLAN

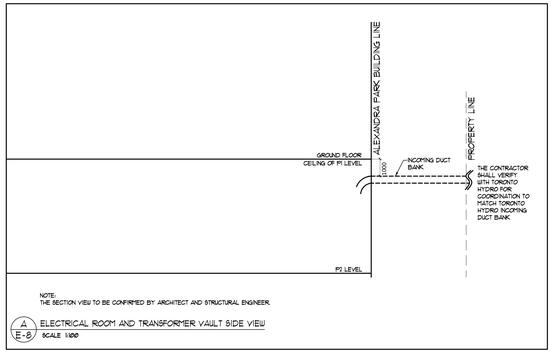

NOTE:
THE SECTION VIEW TO BE CONFIRMED BY ARCHITECT AND STRUCTURAL ENGINEER

A / E-8 ELECTRICAL ROOM AND TRANSFORMER VAULT SIDE VIEW
SCALE 1:100

ACOUSTIC NOTES:

1. THE POWER TRANSFORMER LOCATED IN THE CUSTOMER OWNED SUBSTAION SHOULD BE SELECTED FOR LOW NOISE. TRANSFORMERS WITH COOLING FANS SHOULD BE AVOIDED. TRANSFORMER CORES SHOULD BE INTERNALLY ISOLATED WITH SPRINGS OR NEOPRENE-IN-SHEAR MOUNT.

2. NOTWITHSTANDING THE TYPE OF TRANSFORMER SELECTED, THE UNIT MUST BE WELL ISOLATED. A 150mm THICK HOUSEKEEPING PAD POURED ON 50mm THICK UNDERLAY (2 LAYERS OF ISO-SEP HD OR EQUIVALENT) SHOULD BE INCLUDED BELOW THE UNIT. THE INCOMING DUCT BANK MUST BE WELL ISOLATED AT ANY POINTS OF SUSPENSION FROM UNDERSIDE OF THE GROUND FLOOR SLAB OR ANY SHEAR WALLS USING RUBBER COMPRESSION MOUNTS IN SERIES WITH THE RODS SUPPORTING THE UNISTRUT ASSEMBLIES TO WHICH THE CABLES OR CONDUITS ARE ATTACHED, OR RUBBER PADS OR SLEEVES IN CLAMPS.

3. 300kVA- 450kVA TRANSFORMERS WHICH ARE LOCATED BELOW SUITES SHOULD BE ISOLATED ON DOUBLE LAYER RUBBER PADS (25mm THICK, 50 DUROMETER MAXIMUM). ALL CONDUITS OR CABLES THAT ARE SUSPENDED FROM THE GROUND FLOOR SLAB ABOVE SHOULD BE VIBRATION ISOLATED AT ANY POINT OF SUSPENSION FROM THE STRUCTURE USING RUBBER COMPRESSION MOUNTS IN SERIES WITH THE RODS SUPPORTING THE UNISTRUT ASSEMBLIES TO WHICH THE CABLES OR CONDUITS ARE ATTACHED, IN A MANNER SIMILAR TO THAT DESCRIBED ABOVE. CONDUITS OR CABLES FOR THESE TRANSFORMERS SHOULD NOT BE BURIED IN THE GROUND FLOOR SLAB, BUT SURFACE MOUNTED TO FACILITATE ISOLATION.

4. AN ISOLATED HOUSEKEEPING PAD SHALL BE INSTALLED BELLOW THE TRANSFORMERS (SIZED AT 300KVA OR ABOVE) AND ASSOCIATED SWITCHGEAR.

5. SMALLER TRANSFORMERS (45kVA to 75kVA) LOCATED IN P1 AND ON THE ROOF, SHALL BE ISOLATED ON NSN PADS.

6. ALL TRANSFORMERS ARE TO BE ISOLATED ON DOUBLE-LAYER RUBBER PADS (25mm THICK, 50 DUROMETER MAXIMUM).

7. TRANSFORMER HOUSE KEEPING PADS SHALL BE POURED ON 2 LAYERS OF DURACOUSTIC. TRANSFORMER CASING SHALL BE ISOLATED FROM THE HOUSE KEEPING PADS WITH DOUBLE-LAYER RUBBER PADS.

8. THE GENERATOR SHALL BE LOCATED ON A 100mm THICK HOUSEKEEPING CONCRETE PAD ABOVE THE FLOATING FLOOR. THE GENERATOR SUPPORTED FROM THIS HOUSEKEEPING PAD WITH SPRING ISOLATORS HAVING A NORMAL 25mm STATIC DEFLECTION, WITH RIBED RUBBER PADS UNDER THE SPRING BASE.

9. BACK TO BACK ELECTRICAL OUTLETS ARE TO BE AVOIDED IN SUITE DEMISING WALL. THEY SHOULD BE STAGGERED BY A MINIMUM OF 12" (IN CONCRETE WALLS) OR 1 STUD SPACE (IN DRYWALL), TO PREVENT REDUCING THE SOUND INSULATION PERFORMANCE OF THOSE WALLS. THIS ALSO APPLIES TO COMMUNICATIONS OUTLETS AND SWITCHES.

KEY NOTES:

1. ELECTRICAL CONTRACTOR TO PROVIDE CONCRETE ENCASED DUCT BANKS AND TO VERIFY ON SITE EXACT LOCATION AND DEPTH OF HV CABLES FOR MATCH-UP WITH HV DUCTS AT PROPERTY LINE. INSTALLATION OF HV CABLES AND TERMINATION ARE DONE BY TORONTO HYDRO.

2. ELECTRICAL CONTRACTOR SHALL PROVIDE 6-4" DUCTS FOR TELECOMMUNICATION SERVICES FROM THE BUILDING UP TO PROPERTY LINE. INSTALLATION OF CABLES AND TERMINATION UP TO THE PROPERTY LINE ARE DONE BY THE ELECTRICAL CONTRACTOR. TELECOMMUNICATION SERVICE PROVIDERS ARE RESPONSIBLE FOR DUCTS AND CABLING BEYOND PROPERTY LINE.

3. PROVIDE RAMP SNOW MELTING C/W THE FOLLOWING:

QTY.	TYPE	CAT.#	DESCRIPTION
RAMP, 600V, 3Φ.			
3	EA	SUB13006	MI HEATING CABLE - 462 FEET, 13000W, 600V, WITH 15 FEET COLD LEADS - MADE TO ORDER
6	EA	HARD-SPACER-GALV-25MM-25M	GALVANIZED STEEL PRE-PUNCH STRAPPING 25M
2	EA	SMCS	SNOW MELTING CAUTION SIGN
CONTROLS - DISTRIBUTION & GROUND FAULT PROTECTION INCLUDED			
1	EA	SMPG3-6000-3-1/3PI(50)-3R-100	AUTOMATIC SNOW/ICE MELTING SYSTEM CONTROLLER - 208/240V
1	EA	CIT-1	AUTOMATIC SNOW SENSOR
AS REQ.	EA	SIT-6E	ESTIMATED FREIGHT AT 35% FLAT RATE
AS REQ.	EA	FREIGHT	ESTIMATED FREIGHT FOR ALL MADE TO ORDER ITEMS TBD AT TIME OF ORDER

4. THE CONTRACTOR SHALL VERIFY WITH TORONTO HYDRO FOR COORDINATION TO MATCH TORONTO HYDRO INCOMING DUCT BANK.

5. ALL UNDERGROUND INSTALLATION OF ELECTRICAL DUCTS/CONDUITS SHALL COMPLY WITH THE LATEST ESA CODE RULE 12-012 (BULLETIN 12-2-15), WHICH SPECIFIES "CONTINUOUS RED PLASTIC MARKER TAPES WITH BLACK LETTERS IDENTIFYING THE POWER LINE UNDERGROUND INSTALLATION.

   I) PLACED APPROXIMATELY HALF WAY BETWEEN THE INSTALLATION AND GRADE LEVEL,
   II) INSTALLED COVERING THE WIDTH OF THE INSTALLATION, AND
   III) WHERE MULTIPLE MARKER TAPES ARE REQUIRED TO COVER THE WIDTH OF THE INSTALLATIN MARKER TAPES SHALL BE FERMITTED TO BE PLACED A MAXIMUM OF 600mm APART.

6. RUN 1" CONDUIT TO GENERATOR CONTROL PANEL AND CACF ROOM FROM INCOMING GAS STATION CONTROL VALVE.

7. ELECTRICAL CONTRACTOR SHALL KEEP CLEARANCE 600mm HORIZONTAL AND 300mm VERTICAL BETWEEN SERVICES GAS LINE AND HYDRO DUCT BANK.

8. COMMUNICATION CONDUIT REQUIREMENTS:
   a) PLACE 24" PULL BOX ON BUILDING WALL WHERE ENTRANCE SUB DUCT ENTERS BUILDING SO DUCT CAN BE SEALED AFTER ENTRANCE CABLE IS PLACED TO PREVENT WATER AND GASES SEEPING INTO BUILDING.
   b) CONDUIT TERMINATION AT THE PROPERTY LINE TO BE MARKED WITH A 2"x4" STAKED INTO THE GROUND APPROXIMATELY 3' HIGH MARKED "BELL".
   c) INSIDE THE BUILDING, CONDUIT MUST BE EMT (FIRE RATED ELECTRICAL METALLIC TUBING) 80mm (3.5") OR 100mm (4") INSIDE DIAMETER TO ENSURE THE SUCCESSFUL PLACEMENT AND TO AVOID DAMAGING THE CABLE DURING THE PLACING OPERATION. "1 METER" PULL BOXES ARE REQUIRED AT 90 DEGREE BENDS WITHIN THE BUILDING.
   d) CONDUIT LENGTHS OVER 30m HAVE A PULL ROPE.
   e) ALL CONDUITS TO BE FREE AND CLEAR OF OBSTRUCTIONS AS A BLOCKAGE AT THE TIME OF CABLE PLACEMENT WILL RESULT IN A DELAY OF SERVICE UNTIL THE PATH HAS BEEN CLEARED AT THE OWNER'S EXPENSE.
   f) 4'x8'x3/4" FIRE RETARDANT PLYWOOD BACKBOARD FASTENED TO WALL IN AN AREA ACCESSIBLE WITHOUT THE USE OF A LADDER WHERE IT IS POSSIBLE FOR A TECHNICIAN TO WORK WITHOUT BLOCKING A PASSAGEWAY AND WHERE THE EQUIPMENT MOUNTED WILL NOT BE DAMAGED BY DOORS OR ANY MOVING OBJECTS.

9. REFER TO LANDSCAPE DRAWINGS FOR DETAILED LAYOUT, LANDSCAPE LIGHTS SHALL BE CONTROLLED E A TIMER/CONTACTOR [C] LOCATED NEAR 'ELP-E2' AND CONNECT TO 'ELP-E2'. LIGHTS 'L1' SHALL BE CONTROLLED BY PHOTOCELL.

10. THE CONTRACTOR SHALL VERIFY THE LOCATION OF TELECOMMUNICATION DUCT BANK WITH BELL/ROGERS

11. THE CABLES RUNNING TO AND FROM THE HV TRANSFORMER IN DUCT BANKS SHALL BE EXTERNALLY RUBBER LINED BY CONTRACTOR TO PREVENT VIBRATION TRANSMISSION TO GROUND FLOOR SLAB. (FOR CUSTOM OWNED TRANSFORMERS-SOME CASES ONLY)

ALEXANDRA PARK (#1313)
ELECTRICAL DRAWING LIST

		SCALE																					
E-1	SITE PLAN	1:200	√																				
E-2	P-2 FLOOR PLAN - ELECTRICAL LAYOUT	1:100																					
E-3	P-1 FLOOR PLAN - ELECTRICAL LAYOUT	1:100																					
E-4	G/F SOUTH FLOOR PLAN - LIGHTING LAYOUT	1:50																					
E-5	G/F NORTH FLOOR PLAN - LIGHTING LAYOUT	1:50																					
E-6	G/F SOUTH FLOOR PLAN - POWER LAYOUT	1:50																					
E-7	G/F NORTH FLOOR PLAN - POWER LAYOUT	1:50																					
E-8	2/F SOUTH FLOOR PLAN - ELECTRICAL LAYOUT	1:50																					
E-9	2/F NORTH FLOOR PLAN - ELECTRICAL LAYOUT	1:50																					
E-10	3/F SOUTH FLOOR PLAN - ELECTRICAL LAYOUT	1:50																					
E-11	3/F NORTH FLOOR PLAN - ELECTRICAL LAYOUT	1:50																					
E-12	4/F SOUTH FLOOR PLAN - ELECTRICAL LAYOUT	1:50																					
E-13	4/F NORTH FLOOR PLAN - ELECTRICAL LAYOUT	1:50																					
E-14	5/F SOUTH FLOOR PLAN - ELECTRICAL LAYOUT	1:50																					
E-15	5/F NORTH FLOOR PLAN - ELECTRICAL LAYOUT	1:50																					
E-16	6/F SOUTH FLOOR PLAN - ELECTRICAL LAYOUT	1:50																					
E-17	6/F NORTH FLOOR PLAN - ELECTRICAL LAYOUT	1:50																					
E-18	7/F SOUTH FLOOR PLAN - ELECTRICAL LAYOUT	1:50																					
E-19	7/F NORTH FLOOR PLAN - ELECTRICAL LAYOUT	1:50																					
E-20	8/F SOUTH FLOOR PLAN - ELECTRICAL LAYOUT	1:50																					
E-21	8/F NORTH FLOOR PLAN - ELECTRICAL LAYOUT	1:50																					
E-22	9/F SOUTH FLOOR PLAN - ELECTRICAL LAYOUT	1:50																					
E-23	9/F NORTH FLOOR PLAN - ELECTRICAL LAYOUT	1:50																					
E-24	10/F FLOOR PLAN - ELECTRICAL LAYOUT	1:50																					
E-25	11/F FLOOR PLAN - ELECTRICAL LAYOUT	1:50																					
E-26	12/F FLOOR PLAN - ELECTRICAL LAYOUT	1:50																					
E-27	13/F FLOOR PLAN - ELECTRICAL LAYOUT	1:50																					
E-28	14/F FLOOR PLAN - ELECTRICAL LAYOUT	N.T.S.																					
E-29	ROOF FLOOR PLAN - ELECTRICAL LAYOUT	N.T.S.																					
E-30	SINGLE LINE DIAGRAM	N.T.S.																					
E-31	SUITE DISTRIBUTION PANEL, TELECOM & SECURITY RISER DIAGRAMS	N.T.S.																					
E-32	FIRE ALARM RISER DIAGRAM	N.T.S.																					
E-33	FIRE ALARM SCHEDULES AND DETAILS	N.T.S.																					
E-34	ELECTRICAL PANEL SCHEDULES																						
E-35	ELECTRICAL DETAILS																						
E-36																							
E-37																							
E-38																							
E-39																							

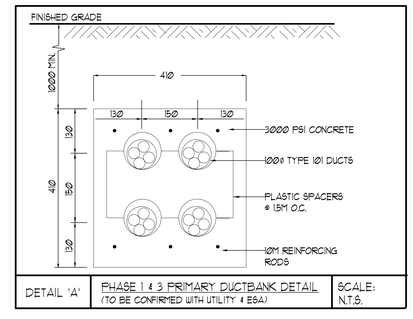

DETAIL 'A' | PHASE 1 & 2 PRIMARY DUCTBANK DETAIL (TO BE CONFIRMED WITH UTILITY & ESA) | SCALE: N.T.S.

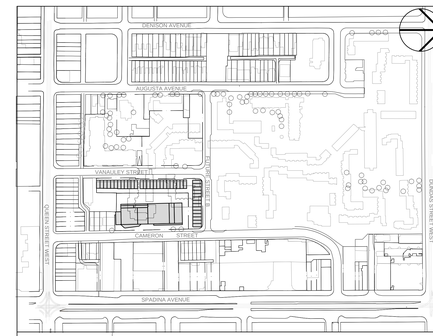

KEY PLAN N.T.S.

ELECTRICAL LEGEND

LIGHTING

- FLUORESCENT LIGHT FIXTURE, TYPE AS INDICATED
- NIGHT LIGHT OR LIGHT CONNECTED TO EMERGENCY POWER
- CEILING MOUNTED/WALL MOUNTED LIGHT FIXTURE, INSCRIBED LETTER DENOTES TYPE
- POLE MOUNTED LIGHT FIXTURE, INSCRIBED LETTER DENOTES TYPE
- CAPPED CEILING LIGHT OUTLET
- TRACK LIGHT
- STRIP LIGHT
- UNDER CABINET FLUORESCENT LIGHT FIXTURE
- CEILING MOUNTED/WALL MOUNTED EXIT SIGN
- SINGLE/DUAL EMERGENCY LAMP REMOTE HEAD
- EMERGENCY BATTERY PACK
- PIP — OCCUPANCY SENSOR POWER PACKS
- S/S/S S.S. S.S. SP. S. — SINGLE/TWO/THREE POLE, SINGLE/TWO/THREE THROW TOGGLE SWITCH RESPECTIVELY, ("S"/"P" DENOTES S-GRAY 4-WAY PILOT LIGHT, DIMMER SWITCHED LIGHT RESPECTIVELY)
- MASTER LIGHTING SHUT-OFF SWITCH
- SENSOR WALL SWITCH PIR, SELF POWERED
- OCCUPANCY SENSOR CEILING MOUNTED

POWER

- REGULAR DUPLEX RECEPTACLE
- DUPLEX RECEPTACLE, GROUND FAULT INTERRUPT
- 5-20R T-SLOT DUPLEX RECEPTACLE
- SINGLE RECEPTACLE TYPE AND CONFIGURATION AS SPECIFIED FOR DRYER
- CONNECTION FOR OVEN/COOKTOP
- ABOVE COUNTER DEVICE
- CEILING MOUNTED DEVICES
- FLOOR MOUNTED DEVICES
- DISCONNECT SWITCH, NON-FUSED
- DISCONNECT SWITCH, FUSED
- COMBINATION STARTER
- FRACTIONAL MOTOR/FAN DIRECT CONNECTION
- DIRECT CONNECTION, SINGLE PHASE
- DIRECT CONNECTION, THREE PHASE
- THERMOSTAT
- DRYER SENSOR
- HEAT TRACE
- CH2000 — ELECTRICAL HEATER
- ELECTRICAL PANEL / SECURITY PANEL

TELECOMMUNICATION

- TV/CABLE OUTLET
- TELEPHONE OUTLET
- TELEPHONE/TV CABLE (MULTI-PORT OUTLET)
- DATA OUTLET
- DATA/TELEPHONE OUTLET
- IN SUITE TELECOMM. BOX C/W RECEPTACLE
- WIFI LOCATION
- PB / VC — MUSIC SPEAKER / VOLUME CONTROL
- RR — RADIO RECEIVER

SECURITY

- C / INT — INTERCOM / ENTERPHONE
- CC — INTERCOM WITH CAMERA
- PB / PAN — PANIC BUTTON / PANIC INTERCOM STATION
- CR — CARD READER
- ARSU / RR — AUTOMATIC RELEASE CARD ACCESS/RADIO RECEIVER
- ES — ELECTRIC STRIKE
- ML — MAGLOCK
- DC / DC — DOOR CONTACT / WINDOW CONTACT
- DO — AUTOMATIC DOOR OPERATOR
- MD — MOTION DETECTOR
- PB — PUSH BUTTON
- SECURITY CAMERA

LIFE SAFETY

- FIRE ALARM SMOKE DETECTOR
- SMOKE ALARM
- FIRE ALARM DUCT TYPE SMOKE DETECTOR
- FIRE ALARM HEAT DETECTOR
- FIXED TEMP. 88 °C DEGREE HEAT DETECTOR
- MOISTURE PROOF HEAT DETECTOR
- CO ALARM
- COMBINATION SMOKE & CO ALARM
- CO / NO — CO SENSOR / NO SENSOR
- FIRE ALARM MANUAL PULL STATION
- FIREFIGHTER'S HANDSET
- FIRE ALARM STROBE/HORN, WALL MTD.
- FIRE ALARM MINI-HORN, WALL MTD.
- FIRE ALARM SPEAKER/STROBE CEILING MTD.
- FIRE ALARM SPEAKER, CEILING MTD.
- FAAP — FIRE ALARM ANNUNCIATOR PANEL
- FACP — FIRE ALARM CONTROL PANEL

REV.	DATE	DESCRIPTION	BY
0	2014-05-20	ISSUED FOR REVIEW	S.T.

MARK VOID ALL PRINTS DATED PREVIOUS TO FINAL DATE ABOVE

REVISIONS

CONTRACTOR MUST CHECK AND VERIFY ALL DIMENSIONS AND CONDITIONS ON THE JOB AND REPORT DISCREPANCIES TO THE ENGINEERS BEFORE PROCEEDING WITH THE WORK. THIS DRAWING IS THE PROPERTY OF THE ENGINEERS AND MUST BE RETURNED UPON COMPLETION OF THE WORK.

DRAWINGS ARE NOT TO BE SCALED

NOVA TREND DEVELOPMENT GROUP LTD.
175 West Beaver Creek Road, Unit 31
Richmond Hill, Ontario L4B 3M1
Tel: 905 882-5445
Fax: 905 882-5447
Email: cad@novatrendeng.com

DRAWING TITLE: SITE PLAN

PROJECT TITLE: ALEXANDRA PARK
XXX
TORONTO ONTARIO

DRAWN BY:	CHECKED BY:	SCALE:
S.O.	S.T.	1:200
DATE: FEB. 13	PROJECT NUMBER: 1313	DRAWING NUMBER: E-1 OF

Drawing name: \\CADSERVER\Current Dwg\1313\1313E - 1 SITE PLAN.dwg Plotted: May 20, 2014 - 3:52pm