205 TYPICAL ISOLATION JOINTS DETAILS AT COLUMNS

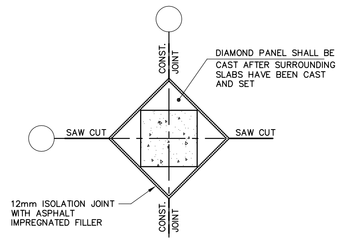

TYPICAL ISOLATION JOINT DETAIL AROUND CONCRETE COLUMNS

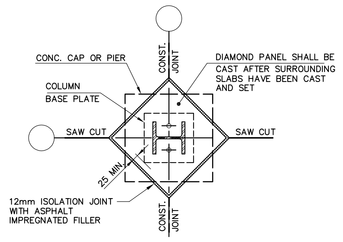

TYPICAL ISOLATION JOINT DETAIL AROUND STEEL COLUMNS

300 TYPICAL DETAILS FOR CONCRETE SHEAR WALLS

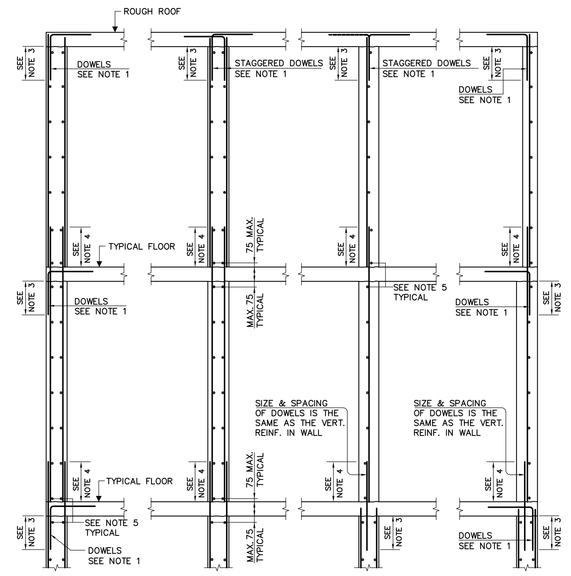

WALLS WITH 2 LAYERS OF REINF. WALLS WITH 1 LAYER OF REINF.

NOTES:

1. PROVIDE DOWELS OF EQUAL AREA TO THE ADJACENT SLAB MIN.TEMP. REINF. BUT NOT LESS THAN 10@300 OR VERT. WALL REINF. HORIZONTAL LEG OF DOWELS TO BE EQUAL TO THE TENSION DEVELOPMENT LENGTH, UNLESS OTHERWISE NOTED.
2. FOR SHEAR WALL SIZE & REINF. SEE WALL SCHEDULE.
3. PROVIDE TENSION DEVELOPMENT LENGTH.
4. PROVIDE COMPRESSION LAP SPLICE LENGTH.
5. AT TOP AND BOTTOM OF EACH STOREY ADD 2-15 FOR 2 LAYERS AND 1-15 FOR 1 LAYER UNLESS OTHERWSE NOTED.

400 TYPICAL CONCRETE COLUMN DETAILS

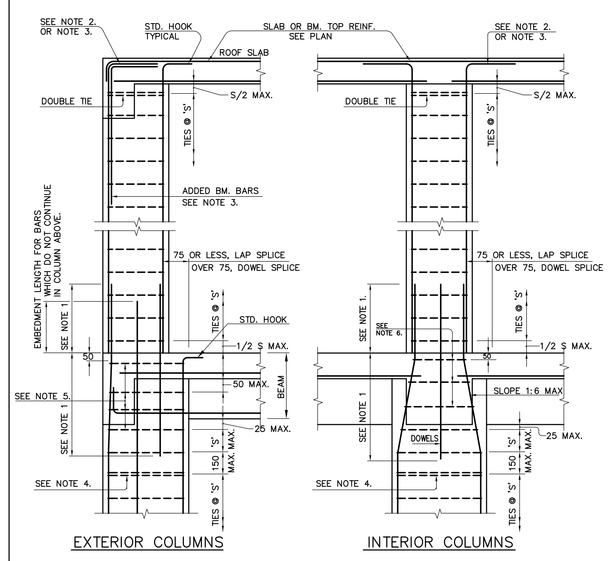

NOTES:

1. ALL COLUMN VERT. REINF. SHALL BE COMPRESSION LAP SPLICED EXCEPT WHERE SHOWN THUS ♣ IN THE COLUMN SCHEDULE, WHICH DENOTES TENSION LAP SPLICE.
2. COLUMN VERT. BARS SHALL BE TERMINATED WITH A FULL DEVELOPMENT COMPRESSION LENGTH INTO THE ROOF STRUCTURE UNLESS THE DEPTH OF STRUCTURE IS TOO SHALLOW TO ACCOMMODATE IT, IN WHICH CASE ADD ADDITIONAL DOWELS AS PER COLUMN SCHEDULE.
3. BARS NOTED THUS ♣ IN COLUMN SCHEDULE SHALL BE PROVIDED WITH CLASS 'B' TENSION SPLICE WITH TOP BARS OF MAIN FLOOR REINF.
4. PROVIDE DOUBLE STIRRUPS IN BOTTOM POSITION OF GOOSE-NECKED VERTICALS AS FOLLOWS: 2-10 FOR 30 VERTICALS AND SMALLER 2-15 FOR 35 & 45 VERTICALS
5. PROVIDE 10M TIES @ 300 FOR COLUMNS UP TO 750 WIDE (IN DIRECTION OF BEAMS) AND 15M TIES @ 300 FOR WIDER COLUMNS.
6. PROVIDE TIES, SAME AS PER NOTE 5, IF LESS THAN 4 BEAMS FRAME INTO COLUMN. NO ADDED TIES ARE REQUIRED WHEN COLUMN IS SUPPORTED BY BEAMS FROM 4 SIDES.

1004 SUGGESTED CRANE OPENING DETAILS

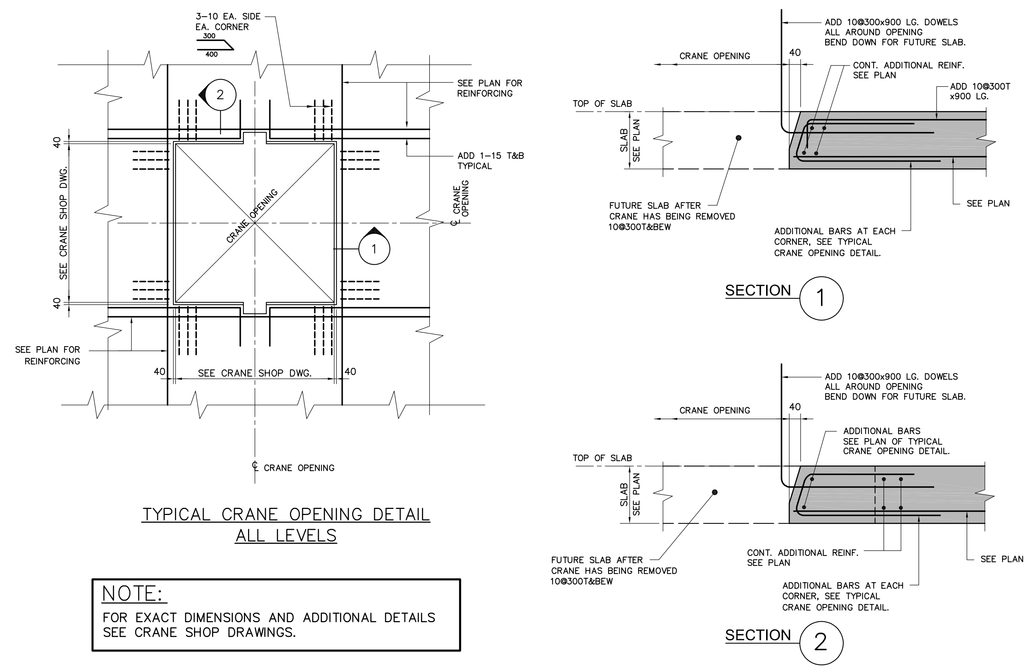

TYPICAL CRANE OPENING DETAIL ALL LEVELS

NOTE:
FOR EXACT DIMENSIONS AND ADDITIONAL DETAILS SEE CRANE SHOP DRAWINGS.

210 TYPICAL SUMP PIT DETAIL

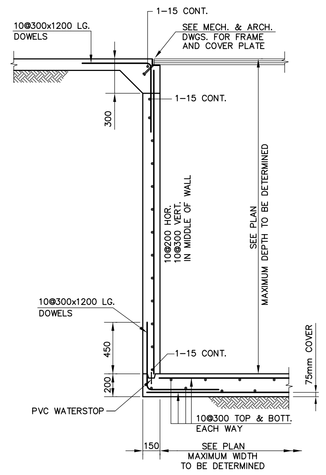

211 TYPICAL PRECAST MECHANICAL PIT

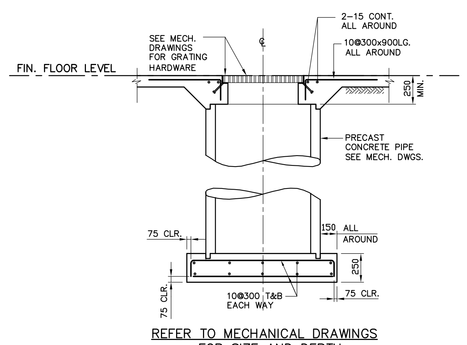

REFER TO MECHANICAL DRAWINGS FOR SIZE AND DEPTH

301 DETAILS FOR ADDED VERTICAL REINFORCING IN SHEAR WALLS

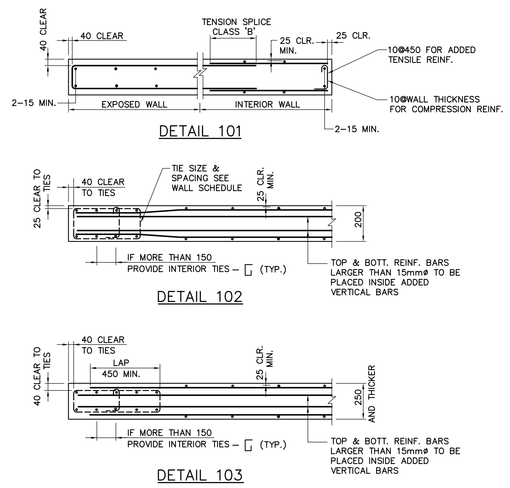

302 TYPICAL DETAILS OF CONT. WALL REINF.

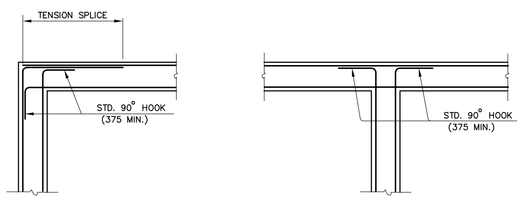

402 TYPICAL COLUMN CAPITAL DETAIL

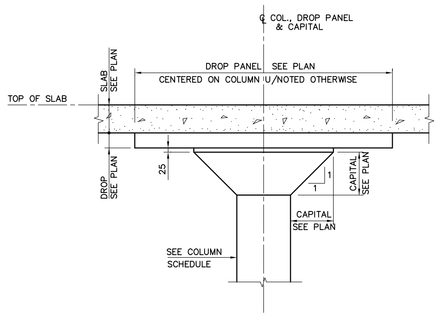

NOTE: ALL CAPITALS SHALL BE CAST MONOLITHICALLY WITH SLAB

401 TYPICAL CONCRETE COLUMN TIES

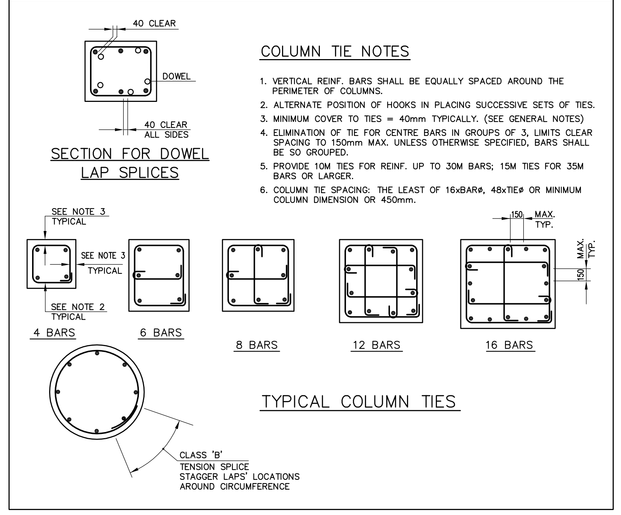

403 TYPICAL DETAIL OF COLUMN CORBEL BEAM SUPPORT

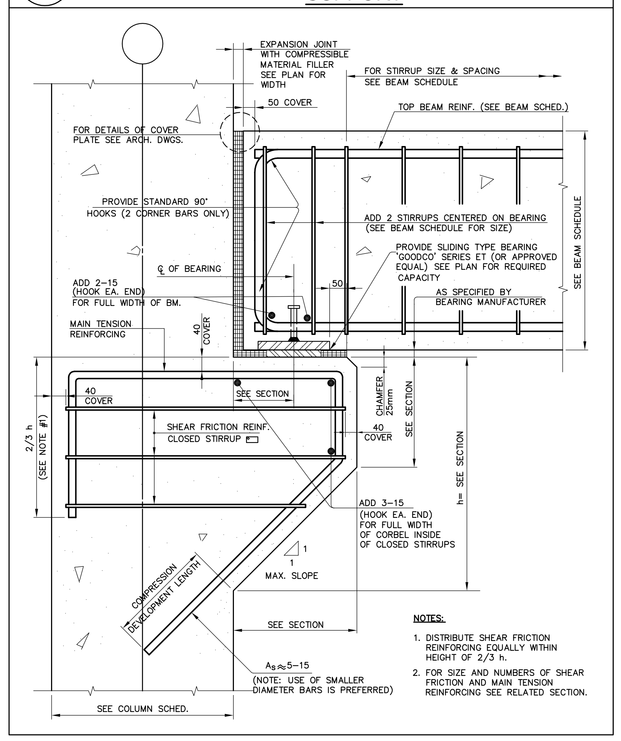

NOTES:

1. DISTRIBUTE SHEAR FRICTION REINFORCING EQUALLY WITHIN HEIGHT OF 2/3 h.
2. FOR SIZE AND NUMBERS OF SHEAR FRICTION AND MAIN TENSION REINFORCING SEE RELATED SECTION.

1000 TYPICAL DETAILS OF OPENINGS IN WALLS & SLABS

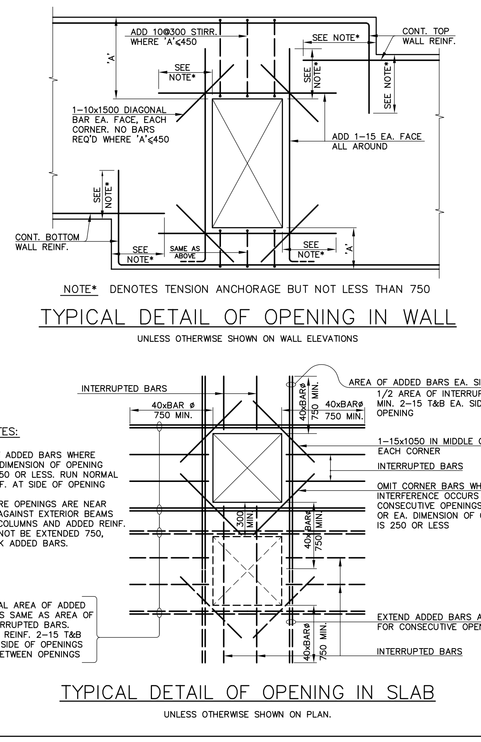

NOTES:

1. OMIT ADDED BARS WHERE EA. DIMENSION OF OPENING IS 250 OR LESS. RUN NORMAL REINF. AT SIDE OF OPENING
2. WHERE OPENINGS ARE NEAR OR AGAINST EXTERIOR BEAMS OR COLUMNS AND ADDED REINF. CANNOT BE EXTENDED 750, HOOK ADDED BARS.

1001 TYPICAL DETAILS OF OPENINGS THROUGH BEAMS

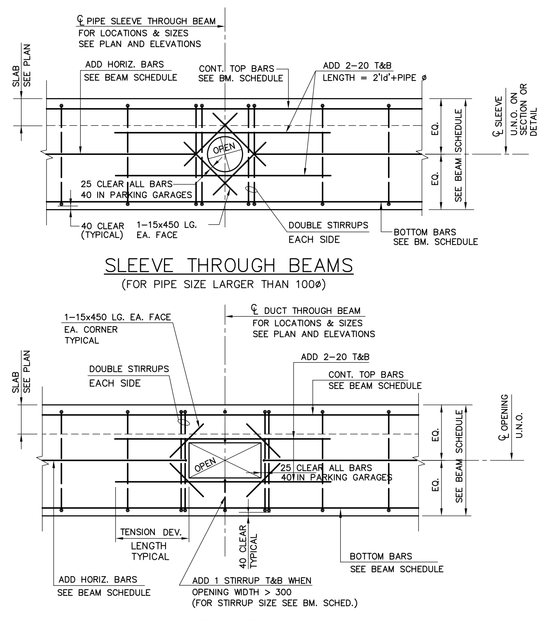

NOTES:

1) OPENINGS THROUGH BEAMS SHALL BE SUBMITTED TO THE ENGINEER FOR APPROVAL AND ADDED REINF. SHALL BE PROVIDED UNLESS OTHERWISE NOTED ON SPECIFIED DETAILS.
2) ALL PIPE SLEEVES SHALL BE FORMED EMPLOYING SCHEDULE 40 STEEL PIPE.

Jablonsky, Ast and Partners
CONSULTING ENGINEERS
1129 LESLIE STREET
DON MILLS, ON., M3C 2K5
TEL. 416-447 7405
FAX 416-447 2771
E-mail jap@astint.on.ca

P.F. AST 13015

FIRST FLOOR ELEV. 93.60m

no.	issued / revised	date:
1	ISSUED FOR PERMIT	2014-05-30
2	RE ISSUED FOR PERMIT	2014-07-10
3	ISSUED FOR FORMING TENDER	2014-08-27
4	CONSTRUCTION REVIEW	2014-12-15
5	RE ISSUED FOR PERMIT	2015-07-27

ALEXANDRA PARK - BLOCK 11
TORONTO, ONTARIO

project no:	13015
scale:	AS NOTED
drawn by:	H.W.
reviewed by:	HOUMAN
date started:	MARCH 2014

TYPICAL DETAILS

S-002