GENERAL NOTES

GENERAL

1. ALL DIMENSIONS SHOWN ON STRUCTURAL DRAWINGS SHALL BE VERIFIED WITH ARCHITECTURAL DRAWINGS AND ANY INCONSISTENCIES SHALL BE REPORTED TO ARCHITECT BEFORE PROCEEDING WITH THE WORK.
2. READ STRUCTURAL DRAWINGS IN CONJUNCTION WITH SPECIFICATIONS AND ALL RELATED CONTRACT DOCUMENTS, WHICH SHALL BE THE MOST CURRENT DOCUMENTS, STANDARDS AND CODES ISSUED AT THE TIME OF THE CONTRACT.
3. REFER TO ARCHITECTURAL, MECHANICAL AND ELECTRICAL DRAWINGS FOR SIZES AND LOCATIONS OF SLEEVES NOT SHOWN ON THE STRUCTURAL DRAWINGS, AND OBTAIN THE CONSULTANT'S APPROVAL BEFORE INSTALLING SLEEVES AND OPENINGS NOT SHOWN ON THE STRUCTURAL DRAWINGS.
4. REFER TO ARCHITECTURAL, MECHANICAL AND ELECTRICAL DRAWINGS FOR DETAILS RELATED TO TRENCHES, SUMP PITS, HOUSEKEEPING PADS, BASES, CURBS AND THE LIKE, NOT DELINEATED ON THE STRUCTURAL DRAWINGS.
5. ALL TRADES SHALL WORK IN CONFORMANCE WITH THE SAFETY REGULATIONS OF THE ONTARIO MINISTRY OF LABOUR AND THE WORKER'S SAFETY INSURANCE BOARD.
6. THE STRUCTURAL DESIGN LOADS SHOWN ON THE DRAWINGS SHALL NOT BE EXCEEDED DURING CONSTRUCTION.

FOUNDATIONS

1. CAISSONS SHALL BE CARRIED DOWN TO, AND BEAR ON NATURAL UNDISTURBED SOUND BEARING MATERIAL, AS DESCRIBED IN THE SOIL REPORT, WITH A MINIMUM SAFE BEARING CAPACITY AS INDICATED ON FOUNDATION PLANS.

   FOOTINGS SHALL BEAR ON NATURAL UNDISTURBED SOIL, AS DESCRIBED IN THE SOIL REPORT, WITH A MINIMUM SAFE BEARING CAPACITY AS INDICATED ON FOUNDATION PLANS.
2. EXTERIOR FOOTINGS SHALL BE FOUNDED AT A MINIMUM OF 1200mm BELOW FINISHED GRADE. FOOTINGS EXPOSED TO FREEZING DURING CONSTRUCTION SHALL BE PROTECTED BY 1200mm OF SOIL OR ITS EQUIVALENT.
3. NEW FOOTINGS WHICH ARE ADJACENT TO EXISTING FOOTINGS SHALL BE FOUNDED AT THE SAME ELEVATION AS THE EXISTING FOOTINGS UNLESS OTHERWISE SHOWN OR NOTED.
4. THE LINE OF SLOPE BETWEEN ADJACENT EXCAVATIONS FOR FOOTINGS OR ALONG STEPPED FOOTINGS SHALL NOT EXCEED A RISE OF 7 IN A RUN OF 10. MAXIMUM STEP IN A STEPPED FOOTING SHALL BE 600mm.
5. CAP DEPTHS GIVEN IN FOOTING SCHEDULE, ARE BASED ON ASSUMED SOIL DESIGN CONDITIONS. IF THE ACTUAL SOIL CONDITIONS ARE FOUND TO BE AT VARIANCE WITH THOSE ASSUMED, FOOTING BASE ELEVATION SHALL BE ADJUSTED AND THE DEPTH OF THE CAPS SHALL BE MODIFIED IN ACCORDANCE WITH THE FOLLOWING LIMITING CRITERIA:
   - A) MINIMUM DEPTH OF CAP UNDER A CONCRETE COLUMN SHALL BE THE GREATER OF:
     - (a) TWICE THE GREATEST HORIZONTAL PROJECTION OF THE CAP BEYOND THE COLUMN FACE, OR
     - (b) HALF THE LENGTH OF THE COLUMN DOWELS, PLUS 75mm, MINUS THE DEPTH OF THE FOOTING BASE.
   - B) MINIMUM DEPTH OF CAP UNDER A STRUCTURAL STEEL COLUMN SHALL BE TWICE THE GREATEST HORIZONTAL PROJECTION OF THE CAP BEYOND THE EDGE OF THE COLUMN BASE PLATE.
   - C) MAXIMUM DEPTH OF CAP SHALL BE 3 TIMES ITS LEAST LATERAL DIMENSION UNLESS REINFORCED.
6. WHERE THERE IS GRADE ON BOTH SIDES OF A FOUNDATION WALL, THE BACKFILLING AGAINST THE WALL SHALL BE CARRIED OUT SO THAT THE DIFFERENTIAL IN THE DEPTH OF THE BACKFILL ON OPPOSITE SIDES OF THE WALL IS NEVER MORE THAN 450mm.
7. DO NOT PLACE BACKFILL AGAINST WALLS, OTHER THAN CANTILEVERED RETAINING WALLS, UNTIL THE WALLS AND THE FLOOR SLABS, AT THE TOP AND BOTTOM OF THE WALLS HAVE DEVELOPED THEIR FULL SPECIFIED CONCRETE DESIGN STRENGTHS.
8. WHERE A SLAB-ON-GRADE IS EMPLOYED TO RESTRAIN THE TOP OF A WALL, SUBJECTED TO LATERAL EARTH PRESSURES, THE WALL SHALL BE ADEQUATELY TEMPORARILY SHORED UNTIL THE CONCRETE IN THE SLAB-ON-GRADE HAS DEVELOPED ITS FULL SPECIFIED CONCRETE DESIGN STRENGTH.
9. SLABS ON EARTH SHALL BE CAST IN ALTERNATE STRIPS NOT EXCEEDING 4500mm IN WIDTH BETWEEN KEYED CONSTRUCTION JOINTS. THE CAST STRIPS SHALL BE SAW-CUT INTO PANELS NOT EXCEEDING 4500mm IN LENGTH.
10. THE MAXIMUM LENGTH OF A WALL CASTING SHALL BE 18000mm BETWEEN KEYED CONSTRUCTION JOINTS. CHASES FOR SLABS AND POCKETS FOR BEAMS SHALL BE PROVIDED IN ALL CAST-IN-SITU CONCRETE WALLS.
11. CRUSHED STONE BASES BELOW SLABS-ON-GRADE SHALL BE COMPACTED TO THE DEGREE RECOMMENDED IN THE SOIL REPORT FOR THIS PROJECT.
12. CONTRACTOR SHALL CONTROL SURFACE AND GROUND WATER DURING CONSTRUCTION TO ENABLE FOUNDATIONS TO BE CONSTRUCTED ON DRY SOIL AND/OR ROCK.
13. NO FOUNDATIONS SHALL BE CAST ON FROZEN MATERIAL OR IN WATER.

MATERIALS

CONCRETE

1. CONCRETE AND CONCRETE WORK SHALL CONFORM TO CSA-A23.1-09/A23.2-09, CAN/CSA-S413-07 AND TO THE DESIGN PROPERTIES FOR STRENGTH AND EXPOSURE CLASSIFICATION PRESENTED IN THE NOTES FOR THE RELEVANT PLANS AND SCHEDULES.
2. REINFORCING STEEL SHALL CONFORM TO CAN/CSA-G30.18-M92 (R2007), AND SHALL HAVE A YIELD STRENGTH OF 400 MPa, UNLESS OTHERWISE NOTED.
3. WELDED WIRE FABRIC SHALL BE SUPPLIED IN FLAT SHEETS ONLY AND SHALL HAVE A MINIMUM YIELD STRENGTH OF 385 MPa.

STRUCTURAL STEEL

1. STRUCTURAL STEEL WIDE FLANGE AND WELDED WIDE FLANGE SHAPES SHALL CONFORM TO CAN/CSA-G40.20/G40.21-04, GRADE 350W, UNLESS OTHERWISE NOTED.

   STRUCTURAL STEEL ANGLES AND CHANNELS SHALL CONFORM TO CAN/CSA-G40.20/G40.21-04, GRADE 300W.

   STRUCTURAL STEEL HOLLOW TUBES SHALL CONFORM TO CAN/CSA-G40.20/G40.21-04, GRADE 350W, CLASS H.
2. STRUCTURAL BOLTS, NUTS AND WASHERS SHALL CONFORM TO ASTM A325M.
3. SECONDARY BOLTS IN GIRTS, LIGHT ANGLE FRAMES AND ANCHOR BOLTS SHALL CONFORM TO ASTM A307, UNLESS OTHERWISE NOTED.
4. CONCRETE EMBEDDED SHEAR STUDS SHALL BE MANUFACTURED OF LOW CARBON STEEL. GRADE 300W, AND SHALL BE WELDED IN CONFORMANCE WITH AWS D1.1/D1.1M-2004, CSA-W59-03 AND W186-M 1990 (R2007). CONCRETE EMBEDDED STUD RAILS SHALL BE MANUFACTURED OF LOW CARBON STEEL, GRADE 300W, AND SHALL SUSTAIN THE FULL YIELD STRENGTH OF THE STUDS.

MASONRY

1. CONCRETE MASONRY BLOCK UNITS SHALL CONFORM TO CSA-A165-04, WITH A COMPRESSIVE STRENGTH OF 15 MPa, BASED ON NET AREA, UNLESS OTHERWISE NOTED.
2. MORTAR SHALL CONFORM TO CSA-A179-04, TYPE 'N' TYPICALLY AND TYPE 'S' BELOW GRADE, UNLESS OTHERWISE NOTED.
3. NON-SHRINK GROUT SHALL CONFORM TO CSA-A23.1-09/A23.2-09, AND SHALL HAVE A MINIMUM COMPRESSIVE STRENGTH OF 35 MPa AT 28 DAYS.
4. MASONRY GROUT SHALL CONFORM TO CSA-A179-04, AND SHALL HAVE A MINIMUM COMPRESSIVE STRENGTH OF 20 MPa AT 28 DAYS, AND A MAXIMUM SLUMP OF 250mm, UNLESS OTHERWISE NOTED.

EXECUTION

CONCRETE

1. REINFORCING SHALL BE SECURELY HELD IN PLACE DURING THE CASTING AND COMPACTING OF THE CONCRETE. IF REQUIRED, ADDITIONAL SUPPORT BARS AND/OR STIRRUPS SHALL BE PLACED BY THE CONTRACTOR TO PROVIDE SUPPORT FOR ALL BARS. ALL TOP BARS IN SLABS SHALL BE SUPPORTED ON CONTINUOUS HIGH CHAIRS.
2. CONTINUOUS REINFORCING BARS SHALL BE LAPPED AT SPLICES AND CORNERS IN CONFORMANCE WITH CSA-A23.3-04, AND THE TYPICAL DETAILS, UNLESS OTHERWISE NOTED. LAP CONTINUOUS TOP BARS AT CENTER BETWEEN SUPPORTS AND CONTINUOUS BOTTOM BARS AT SUPPORTS. WHERE REQUIRED, TERMINATE CONTINUOUS BARS AT NON-CONTINUOUS ENDS WITH STANDARD HOOKS.
3. PROVIDE DOWELS TO WALLS AND COLUMNS WHICH SHALL BE THE SAME IN NUMBER, SIZE AND SPACING, AS THE VERTICAL REINFORCING STEEL IN THE WALLS OR COLUMNS ABOVE, UNLESS OTHERWISE NOTED.
4. ALL DOWELS SHALL HAVE A MINIMUM EMBEDMENT LENGTH EQUAL TO THE STRAIGHT TENSION EMBEDMENT LENGTH FOR THE SIZE OF THE BAR. DOWELS FROM WALLS TO SLABS SHALL HAVE A MINIMUM EMBEDMENT LENGTH OF 600mm INTO THE WALLS AND SLABS UNLESS OTHERWISE INDICATED.
5. CONCRETE BEAMS AND SPANDRELS SHALL BE CAST MONOLITHICALLY WITH SLABS UNLESS OTHERWISE DELINEATED HORIZONTAL CONSTRUCTION JOINTS SHALL NOT BE MADE IN BEAMS OR SPANDRELS UNLESS APPROVED BY THE CONSULTANT. VERTICAL CONSTRUCTION JOINTS MAY BE MADE ONLY AT THE MID-SPANS OF BEAMS, SPANDRELS AND SLABS, WHICH SHALL BE REVIEWED AND APPROVED BY THE CONSULTANT.
6. THE LOCATION AND DETAILS OF CONSTRUCTION JOINTS REQUIRED, BUT NOT SHOWN, SHALL BE SUBMITTED TO THE CONSULTANT FOR APPROVAL.
7. NO OPENINGS SHALL BE FORMED IN THE COLUMN STRIPS OF FLAT PLATE OR FLAT SLAB CONSTRUCTION WITHOUT THE CONSULTANT'S APPROVAL.
8. NO SLEEVES SHALL BE PLACED IN BEAMS OR THROUGH COLUMNS WITHOUT THE CONSULTANT'S APPROVAL.
9. MINIMUM CONCRETE COVER TO REINFORCING BARS IN A NON-CORROSIVE SITUATION SHALL BE 75mm FOR CONCRETE CAST AGAINST AND EXPOSED TO SOIL.
10. MINIMUM CONCRETE COVER TO REINFORCING BARS IN A NON-CORROSIVE SITUATION FOR CONCRETE CAST ON OR WITHIN FORMWORK SHALL BE AS FOLLOWS IN mm:

ELEMENT	REINFORCING BAR DIAMETER (mm)	NOT EXPOSED TO EARTH OR WEATHER (COVER mm)	EXPOSED TO EARTH OR WEATHER (COVER mm)
SLABS AND WALLS	20 AND SMALLER	25	30
	25	25	40
	30	30	45
	35	35	55
	45	45	70
	55	55	85
COLUMNS (AXIAL REINFORCEMENT)	35 AND SMALLER	50	55
	45	50	70
	55	55	85
BEAMS, GIRDERS AND PILES (PRINCIPAL REINFORCEMENT)	35 AND SMALLER	40	55
	45	45	70
	55	55	85
TIES, STIRRUPS AND SPIRALS	–	30	40
N.B. MINIMUM CONCRETE COVER TO PRINCIPAL REINFORCING IN SHEAR WALL = 40mm			

11. MINIMUM CONCRETE COVER TO REINFORCING BARS FOR A 3 HOURS FIRE RATING SHALL BE 35mm FOR BOTTOM BARS IN SLAB, 65mm FOR MAIN AXIAL REINFORCING IN COLUMNS, 35mm FOR WALLS AND 40mm IN BEAMS FOR 35M AND SMALLER, AND 45mm AND 55mm FOR 45M AND 55M BARS RESPECTIVELY.
12. MINIMUM CONCRETE COVER TO REINFORCING BARS FOR CONCRETE EXPOSED TO DE-ICING CHEMICALS, ON PARKING GARAGE SLABS, RAMPS AND TRUCK DOCKS, SHALL BE 40mm, IN GARAGE WALLS AND TOP REINFORCING BARS IN SLABS, AND 30mm FOR BOTTOM REINFORCING BARS.
13. UNLESS OTHERWISE SPECIFIED ON CAMBER DRAWINGS OF FRAMING LEVELS, CAMBER ALL SLAB AND BEAM FORMS 5mm FOR EACH 3000mm OF SPAN. THE CAMBER SHALL BE CHECKED AND ADJUSTED BEFORE THE INITIAL SET OF CONCRETE. CAMBER SHALL BE 12mm FOR EACH 2000mm OF CANTILEVER SPAN. THE FULL THICKNESS OF SLABS AND BEAMS SHALL BE MAINTAINED THROUGHOUT. IN PARKING LEVELS, CAMBER SHALL BE INCREASED AS MAY BE REQUIRED TO ENSURE A MINIMUM NOMINAL SLOPE OF 2 PERCENT TO DRAINS AFTER ALL LONG TERM DEFLECTIONS OCCUR.
14. UNLESS SPECIFIED OTHERWISE, RESHORING SHALL BE INSTALLED FOR A MINIMUM OF 3 FLOORS BELOW THE LATEST SLAB CASTING.
15. LAP SPLICES FOR REINFORCING STEEL SHALL CONFORM TO CSA-A23.3-04, TAKING INTO ACCOUNT THE CONCRETE STRENGTH, GRADE OF STEEL, TOP OR BOTTOM BARS AND COATINGS ON STEEL, IF ANY.
16. ELECTRICAL CONDUITS AND MECHANICAL PIPES ARE NOT PERMITTED IN CONCRETE COLUMNS UNLESS PREVIOUSLY APPROVED BY THE STRUCTURAL CONSULTANT.
17. ONLY VERTICAL CONDUITS OR PIPE ARE PERMITTED IN CONCRETE WALLS.
18. WHERE CONDUITS DISPLACE MORE THAN 5% OF THE CROSS SECTIONAL AREA OF THE SLAB, CONCRETE WITH 10mm AGGREGATE (PEA GRAVEL) SHALL BE USED AND THE CONSULTANT SHALL BE NOTIFIED. IF THE CONGESTION IS DEEMED TO BE SIGNIFICANT THE CONSULTANT RESERVES THE RIGHT TO INCREASE THE CONCRETE STRENGTH.
19. MAXIMUM OUTSIDE DIAMETER OF EMBEDED PIPES AND CONDUITS SHALL BE 50mm. CONDUITS SHALL BE SPACED A MINIMUM OF 3 DIAMETERS APART.

EXECUTION CONT'D.

STRUCTURAL STEEL

1. STRUCTURAL STEEL WORK SHALL CONFORM TO CAN/CSA-S16-01.
2. STRUCTURAL STEEL BEAMS SHALL HAVE A MINIMUM BEARING LENGTH OF 200mm ON MASONRY OR CONCRETE, UNLESS OTHERWISE NOTED.
3. STEEL BEARING PLATES SHALL BE CENTERED UNDER THE BEAM WEBS, UNLESS NOTED OTHERWISE.
4. BEAM BEARING PLATES DIMENSION GIVEN FIRST IS PARALLEL TO THE SPAN OF THE BEAM.
5. WHERE MOMENT CONNECTIONS ARE INDICATED, THE CONNECTION SHALL DEVELOP THE FULL FLEXURAL CAPACITY OF THE SMALLER CONNECTED MEMBER.
6. MEMBER SPLICES SHALL DEVELOP THE FULL FLEXURAL AND SHEAR CAPACITY OF THE MEMBER. MEMBERS SHALL NOT BE SPLICED AT POINTS OF MAXIMUM STRESS. SPLICES SHALL BE MADE ONLY WITH THE APPROVAL OF THE CONSULTANT.
7. INSTALL FITTED, WELDED STIFFENER PLATES AT EACH SIDE OF BEAM WEB AT LOCATIONS OF CONCENTRATED LOADS, SUCH AS A SUPPORT FOR A COLUMN ABOVE, OR OVER A COLUMN, UNLESS OTHERWISE SHOWN.
8. COLUMNS SHALL BE CONNECTED TO BASE PLATES FOR THE GREATER OF THE FOLLOWING, PLUS OTHER FORCES SHOWN, UNLESS OTHERWISE NOTED.
   - a. 5 PERCENT OF THE VERTICAL COLUMN LOAD APPLIED HORIZONTALLY.
   - b. THE RESULTANT OF BRACING FORCES.
9. FABRICATE CAMBRES TO PURLINS, BEAMS, GIRDERS AND TRUSSES, AS SHOWN ON THE FRAMING PLANS. NOTED CAMBERS ARE FOR THE ERECTED CONFIGURATION BEFORE STEEL DECK IS INSTALLED.
10. INSTALL WELDED L-75x75x6 BRACKET, AT 45 DEGREES TO THE BEAM AXIS, WHERE BEAMS CONNECT AT COLUMNS, TO SUPPORT STEEL DECK, WHERE THE COLUMN CONTINUES ABOVE THE LEVEL OF THE DECK.
11. INSTALL AND MAINTAIN TEMPORARY BRACING UNTIL THE ENTIRE STRUCTURAL STEEL FRAME IS COMPLETED, INCLUDING FLOOR AND ROOF DECKS AND ALL ELEMENTS WHICH ARE PART OF THE LATERAL LOAD RESISTING SYSTEM.
12. ALL STRUCTURAL STEEL EXPOSED TO THE ELEMENTS SHALL BE HOT-DIPPED GALVANIZED UNLESS OTHERWISE NOTED. WHERE GALVANIZED COATING HAS BEEN COMPROMISED, TOUCH-UP WITH ZINC RICH PRIMER AS APPROVED BY THE CONSULTANT.

MASONRY

1. MASONRY CONSTRUCTION SHALL CONFORM TO CSA-A371-04.
2. BELOW BEARING PLATES OF CONCRETE AND STEEL BEAMS, JOISTS AND TRUSSES, PROVIDE SOLID MASONRY BEARING PADS OF ONE HUNDRED PERCENT SOLID MASONRY UNITS, LAID IN TYPE 'S' MORTAR. THE BEARING PAD LENGTH SHALL BE EQUAL TO TWICE THE LENGTH OF THE BEARING PLATE AND SHALL EXTEND DOWN BELOW THE BEARING PLATE, TO A DEPTH EQUAL TO THE LENGTH OF THE BEARING PLATE.
3. CONCRETE SLABS BEARING ON MASONRY SHALL HAVE A MINIMUM BEARING OF 200mm AND THE BEARING COURSES SHALL BE OF ONE HUNDRED PERCENT SOLID MASONRY UNITS LAID IN TYPE 'S' MORTAR EXTENDING DOWN TO A DEPTH OF 200mm BELOW THE UNDERSIDE OF THE SLAB.
4. AT THE BEARING ENDS OF STEEL, CONCRETE OR REINFORCED CONCRETE BLOCK LINTELS, PROVIDE 200mm LONG BY 200mm DEEP BEARING PADS OF ONE HUNDRED PERCENT SOLID MASONRY UNITS LAID IN TYPE 'S' MORTAR.
5. WHERE STEEL BEAMS FRAME INTO MASONRY WALLS, AND STEEL COLUMNS ARE EMBEDDED IN MASONRY WALLS, CONSTRUCT THE MASONRY UNITS SO AS TO TIGHTLY FILL THE SPACES BETWEEN THE FLANGES AND TO BE IN FULL CONTACT WITH BOTH SIDES OF THE WEBS.
6. OVER ALL OPENINGS AND RECESSES IN MASONRY WALLS, UNLESS OTHERWISE NOTED, PROVIDE 200mm DEEP LINTEL OR 200mm DEEP REINFORCED CONCRETE BLOCK LINTELS OF 20 MPa CONCRETE FOR CONCRETE BLOCK WALLS REINFORCED AS FOLLOWS:
   - a. FOR CLEAR SPANS UP TO 1200mm USE 1-10M, HOOKED EACH END, TOP AND BOTTOM, FOR EACH 90mm OF WALL THICKNESS OR PORTION THEREOF.
   - b. FOR CLEAR SPANS BETWEEN 1200mm AND 1800mm USE 1-15M, HOOKED EACH END, TOP AND BOTTOM, FOR EACH 90mm OF WALL THICKNESS OR PORTION THEREOF.

   FOR BRICK WALLS, USE ONE L-90x90x8 FOR CLEAR SPANS UP TO 1200mm FOR EACH 90mm OF WALL THICKNESS, AND FOR CLEAR SPANS BETWEEN 1200mm AND 1800mm, USE ONE L-125x90x8 (LLV) FOR EACH 90mm OF WALL THICKNESS.
7. REFER TO LINTEL SCHEDULES FOR FURTHER DETAILS.
8. WALL THICKNESS CHANGES SHALL INCORPORATE 100% SOLID MASONRY UNITS FOR A HEIGHT OF 200mm BELOW THE REDUCTION IN WALL THICKNESS.

LOADS

1. LIVE SERVICE LOADS ARE AS FOLLOWS, UNLESS OTHERWISE NOTED ON PLANS :

LIVING QUARTERS, UPPER FLOOR CORRIDORS	1.9 kPa
ENTRANCE HALLS, GROUND FLOOR CORRIDORS, EXITS, STAIRS, STORAGE AREAS, RECREATION AREAS	4.8 kPa
BALCONIES, SUNROOMS & LOCKER ROOMS	4.8 kPa
GARAGES FOR PASSENGER VEHICLES	2.4 kPa
LOADING DOCKS AND RAMPS FOR BULK LIFT VEHICLES	14.0 kPa
MECHANICAL ROOMS	7.2 kPa
RETAIL AREAS	4.8 kPa
SIDEWALKS AND DRIVEWAYS OVER AREAWAYS AND BASEMENTS	12.0 kPa

TRANSIENT LOADS ON STRUCTURAL FRAME

1. THE STRUCTURE HAS BEEN DESIGNED TO RESIST WIND PRESSURE AND LIVE LOAD DUE TO EARTHQUAKE IN ACCORDANCE WITH ONTARIO BUILDING CODE 2012, AND THE REFERENCED CLIMATIC INFORMATION FOR TORONTO , ONTARIO.
2. LIVE LOADS DUE TO SNOW AND RAIN.
   Ss=0.9 kPa
   Sr=0.4 kPa
3. LIVE LOADS DUE TO WIND FOR TORONTO ONTARIO.
   IMPORTANCE FACTOR Iw =1.0
   HOURLY WIND PRESSURES: (1/10) = 0.34 kPa
   (1/50) = 0.44 kPa
   E-W , Vw = 4397 kN , Mw = 109610 kN.m
   N-S , Vw = 2082 kN , Mw = 60308 kN.m
4. LIVE LOADS DUE TO EARTHQUAKE FOR TORONTO ONTARIO.
   IMPORTANCE FACTOR Ie =1.0
   Sa(0.2) =0.22, Sa(0.5) =0.13, Sa(1.0) =0.067, Sa(2.0) =0.021
   SITE CLASS =C, Fa =1.0, Fv =1.0
   IeFaSa(0.2) = 0.22
   TYPE OF IRREGULARITIES =YES, TYPES 3,4,5,7,8
   METHOD OF ANALYSIS= STATIC
   ToY =0.669 ToX =0.55 Mv =1.0 J= 0.93
   TYPE OF SFRS.=CONVENTIONAL SHEAR WALLS Rd =1.5 Ro=1.3
   N-S , Vt =9669 kN , M t= 287107 kN.m
   E-W , Vt =10856kN , M t= 322364 kN.m

107 TABLE 5

SLABS AND BEAMS OTHER THAN TOP BARS

LAP SPLICE LENGTHS AND DEVELOPMENT LENGTHS

DATA		BAR SIZE	10	15	20	25	30	35
f'c = 20 MPa, fy = 400 MPa, Bottom bars, Sizes 25 and smaller	TENSION	LAP SPLICE	420	630	840	1310	1570	1840
		DEVELOPMENT LENGTH	330	490	650	1010	1210	1410
	COMPRESSION	LAP SPLICE	300	440	590	730	880	1030
		DEVELOPMENT LENGTH	220	320	430	540	640	750
f'c = 20 MPa, fy = 400 MPa, Bottom bars, Sizes 30 and larger	TENSION	LAP SPLICE	390	570	750	1170	1410	1640
		DEVELOPMENT LENGTH	300	440	580	900	1080	1260
	COMPRESSION	LAP SPLICE	300	440	590	730	880	1030
		DEVELOPMENT LENGTH	200	290	390	480	580	680
f'c = 20 MPa, fy = 400 MPa, Other than bottom bars, Sizes 25 and smaller	TENSION	LAP SPLICE	390	520	690	1070	1290	1500
		DEVELOPMENT LENGTH	300	400	530	830	990	1150
	COMPRESSION	LAP SPLICE	300	440	590	730	880	1030
		DEVELOPMENT LENGTH	200	280	350	440	530	630
f'c = 20 MPa, fy = 400 MPa, Other than bottom bars, Sizes 30 and larger	TENSION	LAP SPLICE	390	480	640	990	1190	1390
		DEVELOPMENT LENGTH	300	370	490	770	920	1070
	COMPRESSION	LAP SPLICE	300	440	590	730	880	1030
		DEVELOPMENT LENGTH	200	280	350	440	530	630
f'c = 25 MPa, fy = 400 MPa, Bottom bars, Sizes 25 and smaller	TENSION	LAP SPLICE	390	450	600	930	1110	1300
		DEVELOPMENT LENGTH	300	350	460	720	860	1000
	COMPRESSION	LAP SPLICE	300	440	590	730	880	1030
		DEVELOPMENT LENGTH	200	280	350	440	530	630
f'c = 25 MPa, fy = 400 MPa, Bottom bars, Sizes 30 and larger	TENSION	LAP SPLICE	390	420	560	880	1050	1230
		DEVELOPMENT LENGTH	300	330	430	680	810	940
	COMPRESSION	LAP SPLICE	300	440	590	730	880	1030
		DEVELOPMENT LENGTH	200	280	350	440	530	630
f'c = 25 MPa, fy = 400 MPa, Other than bottom bars, Sizes 25 and smaller	TENSION	LAP SPLICE	390	410	530	830	1000	1160
		DEVELOPMENT LENGTH	300	310	410	640	770	900
	COMPRESSION	LAP SPLICE	300	440	590	730	880	1030
		DEVELOPMENT LENGTH	200	280	350	440	530	630
f'c = 25 MPa, fy = 400 MPa, Other than bottom bars, Sizes 30 and larger	TENSION	LAP SPLICE	390	390	510	790	950	1110
		DEVELOPMENT LENGTH	300	300	390	610	730	850
	COMPRESSION	LAP SPLICE	300	440	590	730	880	1030
		DEVELOPMENT LENGTH	200	280	350	440	530	630
f'c = 30 MPa, fy = 400 MPa, Bottom bars, Sizes 25 and smaller	TENSION	LAP SPLICE	390	390	490	760	910	1060
		DEVELOPMENT LENGTH	300	300	380	590	700	820
	COMPRESSION	LAP SPLICE	300	440	590	730	880	1030
		DEVELOPMENT LENGTH	200	280	350	440	530	630
f'c = 30 MPa, fy = 400 MPa, Bottom bars, Sizes 30 and larger	TENSION	LAP SPLICE	390	390	470	740	880	1030
		DEVELOPMENT LENGTH	300	300	360	570	680	790
	COMPRESSION	LAP SPLICE	300	440	590	730	880	1030
		DEVELOPMENT LENGTH	200	280	350	440	530	630
f'c = 30 MPa, fy = 400 MPa, Other than bottom bars, Sizes 25 and smaller	TENSION	LAP SPLICE	390	390	470	740	880	1030
		DEVELOPMENT LENGTH	300	300	360	570	680	790
	COMPRESSION	LAP SPLICE	300	440	590	730	880	1030
		DEVELOPMENT LENGTH	200	280	350	440	530	630
f'c = 30 MPa, fy = 400 MPa, Other than bottom bars, Sizes 30 and larger	TENSION	LAP SPLICE	390	390	470	740	880	1030
		DEVELOPMENT LENGTH	300	300	360	570	680	790
	COMPRESSION	LAP SPLICE	300	440	590	730	880	1030
		DEVELOPMENT LENGTH	200	280	350	440	530	630

207 TYPICAL BLOCK WALL FOOTING UNHEATED AREA

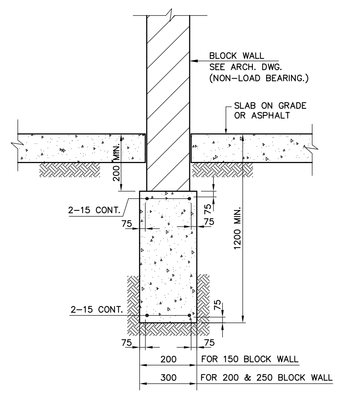

200 TYPICAL SLAB ON GRADE DETAILS

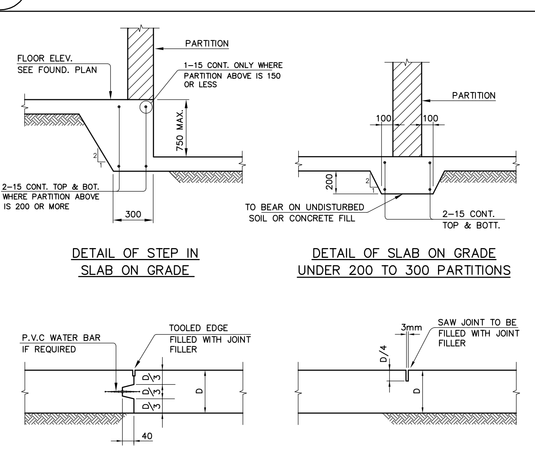

DETAIL OF STEP IN SLAB ON GRADE

DETAIL OF SLAB ON GRADE UNDER 200 TO 300 PARTITIONS

DETAIL OF CONSTRUCTION JOINT

DETAIL OF SAWCUT JOINT

201 TYPICAL CONCRETE COLUMN FOOTINGS

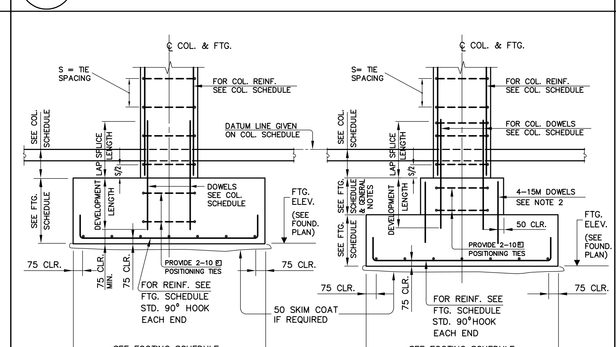

COLUMN FOOTINGS WITHOUT CAPS

COLUMN FOOTINGS WITH CAPS

1. FOR DOWEL DEVELOPMENT LENGTH AND LAP SPLICE LENGTH SEE COLUMN SCHEDULE.
2. WHERE COLUMN DOWELS DO NOT PROJECT INTO FOOTING BASE MORE THAN 75mm, PROVIDE 4-15x600 LG. DOWELS BETWEEN FOOTING CAP AND BASE.
3. IN RECTANGULAR FOOTINGS THE REINFORCING STEEL IN THE SHORT DIRECTION SHALL BE PLACED WITHIN THE PRIMARY PORTION, WHICH IS EQUAL TO A BAND WIDTH OF 2/(RATIO OF LONG TO SHORT SIDE+1) OF THE LONG DIMENSION TO THE SHORT DIMENSION OR THE LENGTH OF THE COLUMN OR WALL ABOVE, WHICHEVER IS GREATER, CENTERED UNDER THE COLUMN OR WALL ABOVE. THE REMAINING PORTION SHALL BE DISTRIBUTED UNIFORMLY OUTSIDE OF THE CENTER BAND WIDTH.

202 TYPICAL SHEAR WALL FOOTINGS

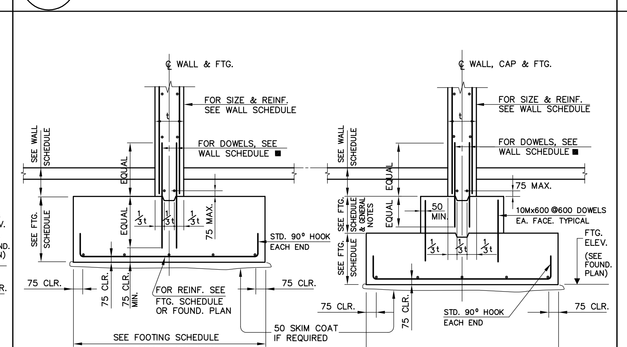
℄ WALL & FTG.
FOR SIZE & REINF.
SEE WALL SCHEDULE
FOR DOWELS, SEE
WALL SCHEDULE ■
SEE WALL
SCHEDULE
EQUAL
SEE FTG.
SCHEDULE
75 MAX.
STD. 90° HOOK
EACH END
75 CLR.
75
CLR
MIN.
75 CLR.
FOR REINF. SEE
FTG. SCHEDULE
OR FOUND. PLAN
50 SKIM COAT
IF REQUIRED
SEE FOOTING SCHEDULE
OR FOUNDATION PLAN
℄ WALL, CAP & FTG