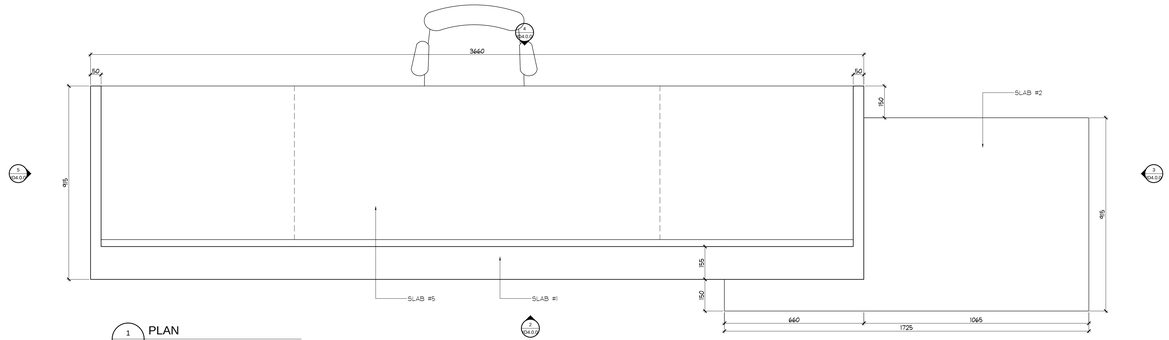

1 ID4.0.0 PLAN
CONCIERGE DESK SCALE 1:10

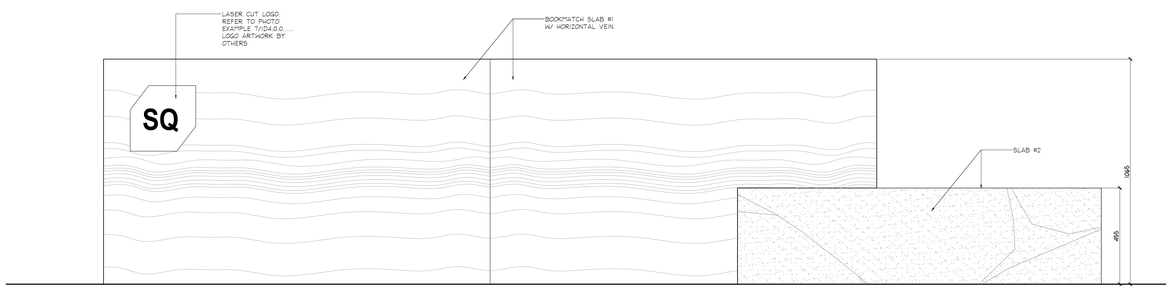

2 ID4.0.0 ELEVATION
CONCIERGE DESK SCALE 1:10

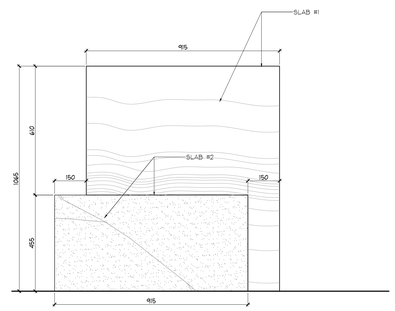

3 ID4.0.0 ELEVATION
CONCIERGE DESK SCALE 1:10

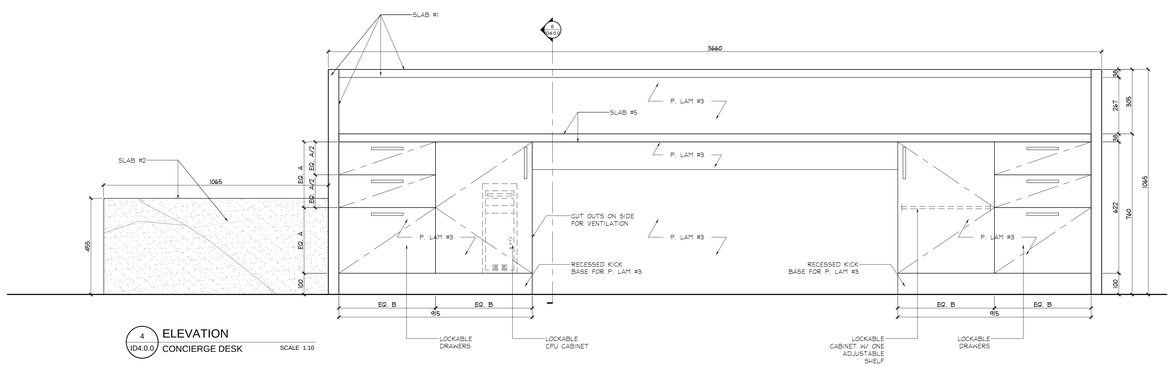

4 ID4.0.0 ELEVATION
CONCIERGE DESK SCALE 1:10

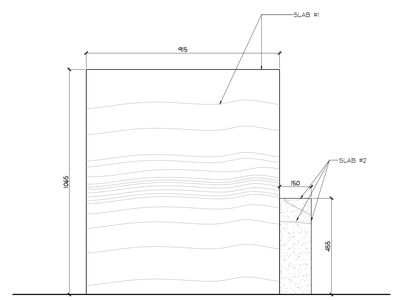

5 ID4.0.0 ELEVATION
CONCIERGE DESK SCALE 1:10

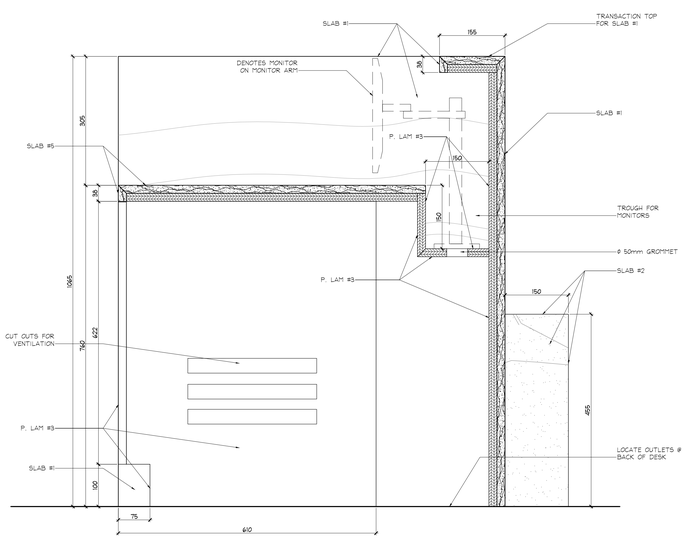

6 ID4.0.0 SECTION
CONCIERGE DESK SCALE 1:10

7 ID4.0.0 LASER CUT SAMPLE
CONCIERGE DESK N.T.S.

DO NOT SCALE DRAWINGS.

CONTRACTOR MUST VERIFY ALL DRAWINGS, DIMENSIONS, DETAILS AND SPECIFICATIONS, AND REPORT ANY DISCREPANCIES TO *UNION 31 INC.* BEFORE PROCEEDING WITH WORK. MATERIALS MAY NOT BE SUBSTITUTED WITHOUT WRITTEN APPROVAL FROM *UNION 31 INC.*

ALL DRAWINGS AND SPECIFICATIONS ARE INSTRUMENTS OF SERVICE AND THE PROPERTY OF *UNION 31 INC.* WHICH MUST BE RETURNED AT THE COMPLETION OF THE WORK.

PRINTED: 15-Jul-15

NO.	DATE	COMMENTS	INI
10	15 JULY / 15	ISSUED FOR TRIM CARPENTRY TENDER	CB
09	16 JUNE / 15	ISSUED FOR FINISH CARPENTRY	CB
02	26 JAN / 15	ISSUED FOR TENDER	AP

REVISIONS:

UNION31

UNION31 INC.
183 BATHURST STREET, STE 201
TORONTO, ON, M5T 2R7, CANADA
TEL: 416-597-1576 FAX: 416-597-2139

PROJECT NAME:
ALEXANDRA PARK
MAIN BUILDING
BLOCK 11
ON, Canada

PROJECT NO.: 13-949

DRAWING/S:
MILLWORK DETAILS

DATE STARTED:	07 AUG / 13	DRAWING NO.:	ID 4.0.0
SCALE:	AS NOTED		
DRAWN BY:	SM		
APPROVED BY:	KC		

38 x 48