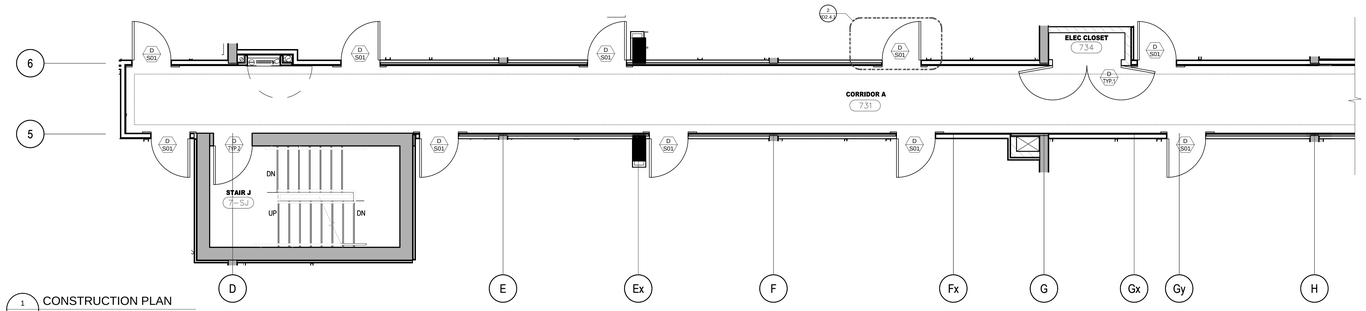


1 ID1.7.0 CONSTRUCTION PLAN
7TH FLOOR
SCALE 1:50

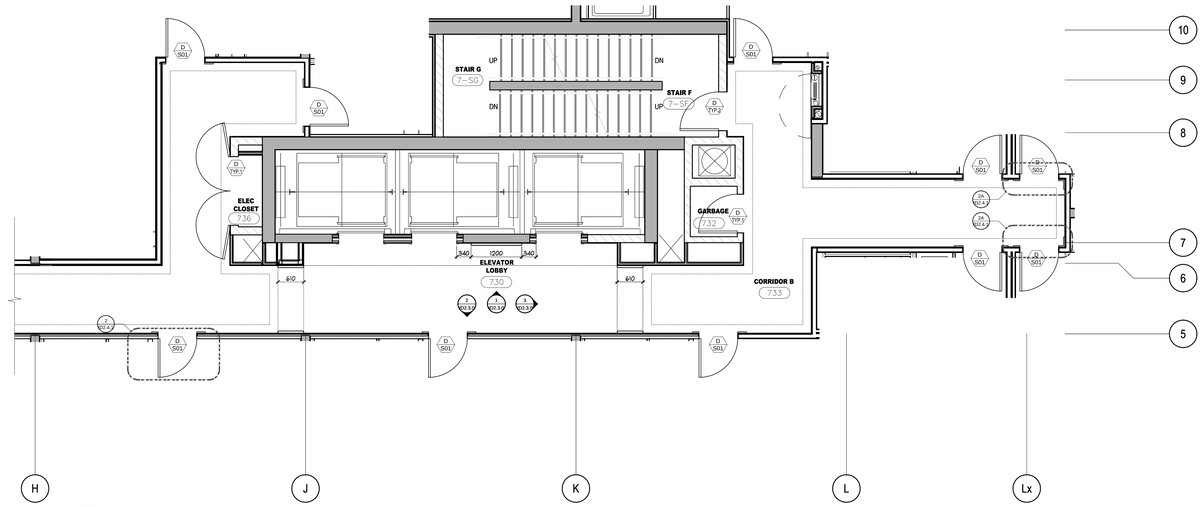


2 ID1.7.0 CONSTRUCTION PLAN
7TH FLOOR
SCALE 1:50

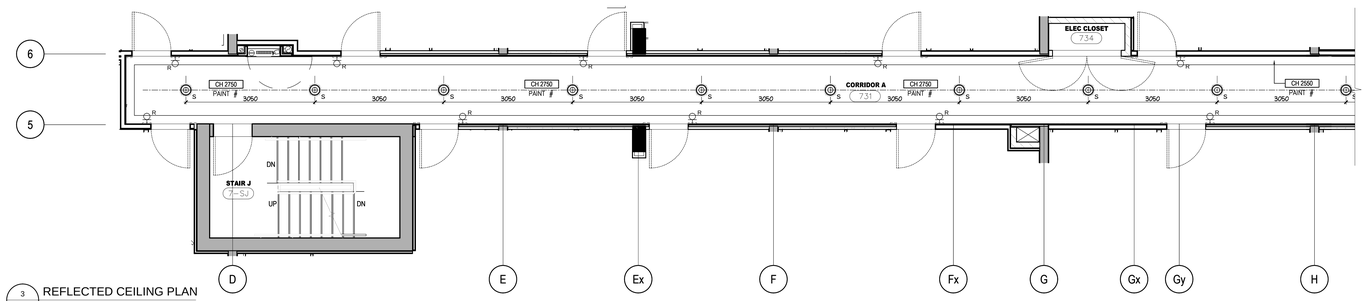


3 ID1.7.0 REFLECTED CEILING PLAN
7TH FLOOR
SCALE 1:50

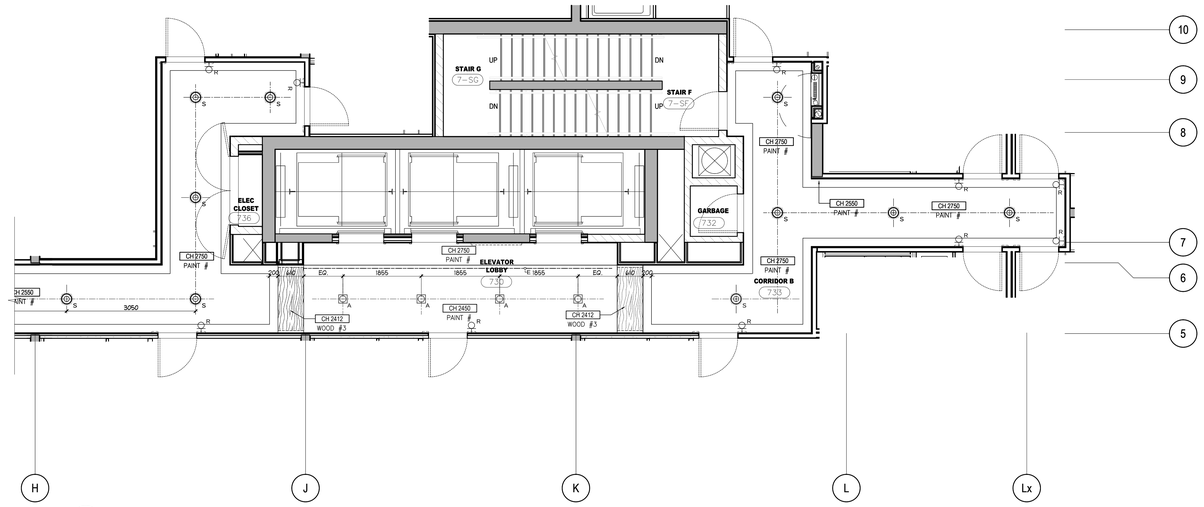


4 ID1.7.0 REFLECTED CEILING PLAN
7TH FLOOR
SCALE 1:50

## DO NOT SCALE DRAWINGS.

CONTRACTOR MUST VERIFY ALL DRAWINGS, DIMENSIONS, DETAILS AND SPECIFICATIONS, AND REPORT ANY DISCREPANCIES TO *UNION 31 INC.* BEFORE PROCEEDING WITH WORK. MATERIALS MAY NOT BE SUBSTITUTED WITHOUT WRITTEN APPROVAL FROM *UNION 31 INC.*

ALL DRAWINGS AND SPECIFICATIONS ARE INSTRUMENTS OF SERVICE AND THE PROPERTY OF *UNION 31 INC.* WHICH MUST BE RETURNED AT THE COMPLETION OF THE WORK.

PRINTED: 15-Jul-15

| NO. | DATE | COMMENTS | INI |
|---|---|---|---|
| 10 | 15 JULY / 15 | ISSUED FOR TRIM CARPENTRY TENDER | CB |
| 09 | 16 JUNE / 15 | ISSUED FOR FINISH CARPENTRY | CB |
| 03 | 06 MAR / 15 | ISSUED FOR TILE TENDER | AP |
| 02 | 26 JAN / 15 | ISSUED FOR TENDER | AP |
| 01 | 22 AUG / 14 | ISSUED FOR PERMIT | AP |

REVISIONS:

UNION31

**UNION31 INC.**
183 BATHURST STREET, STE 201
TORONTO, ON, M5T 2R7, CANADA
TEL: 416-597-1576 FAX: 416-597-2139

PROJECT NAME:
ALEXANDRA PARK
MAIN BUILDING
BLOCK 11
ON, Canada

PROJECT NO.: 13-949

DRAWING/S:
7TH FLOOR
CONSTRUCTION PLAN &
REFLECTED CEILING PLAN

| | | | |
|---|---|---|---|
| DATE STARTED: | 07 AUG / 13 | DRAWING NO.: | ID 1.7.0 |
| SCALE: | 1 : 50 | | |
| DRAWN BY: | AP | | |
| APPROVED BY: | KC | | |

35 x 43