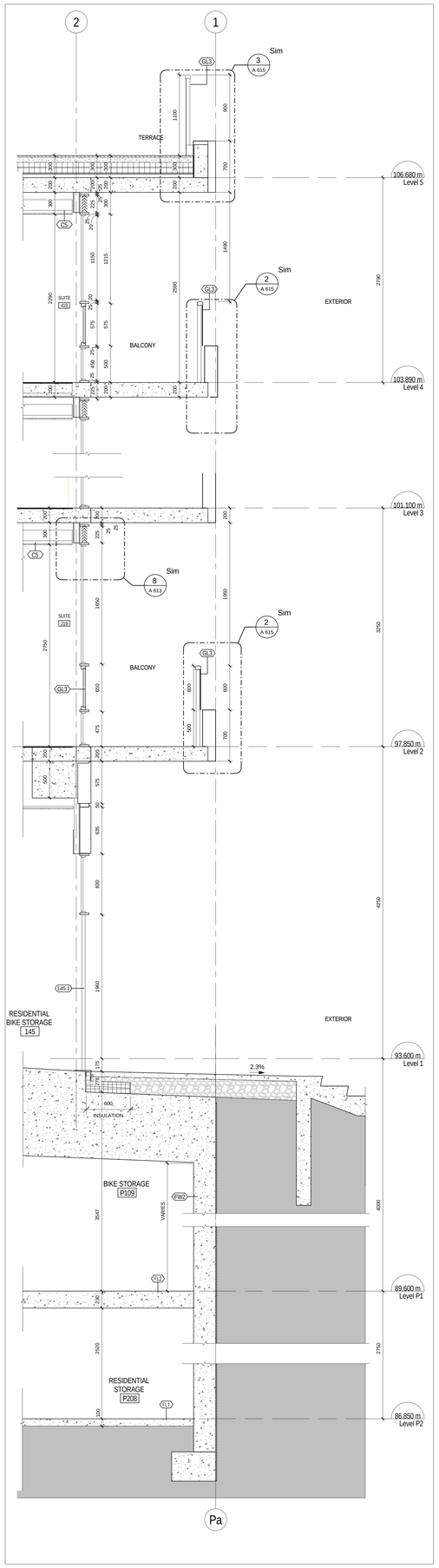


4 A 501 EAST WALL SECTION AT BIKE STORAGE
1 : 25

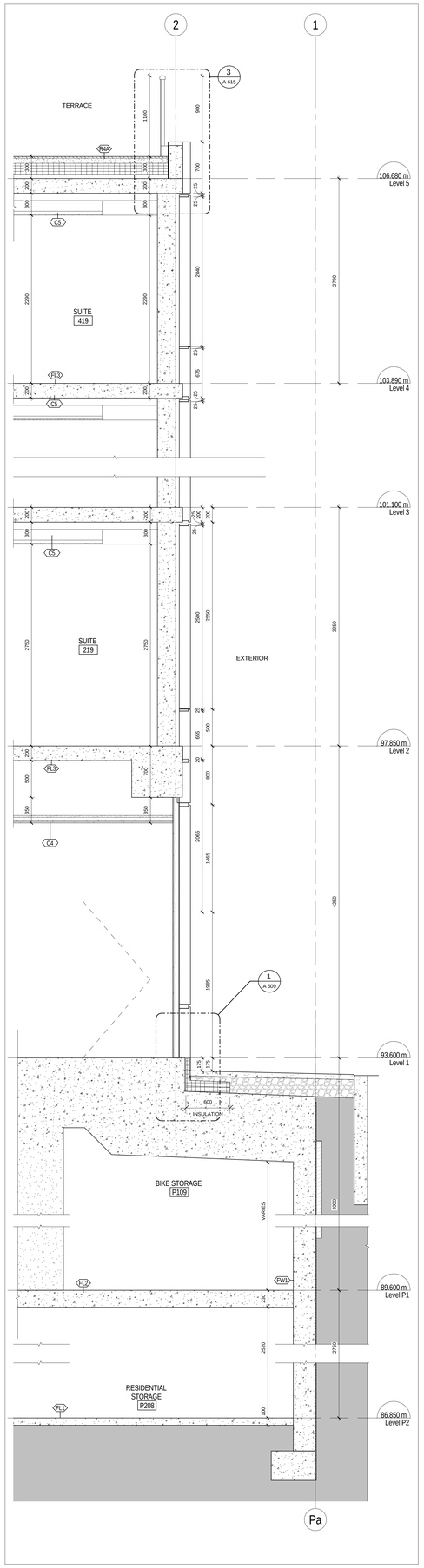


3 A 501 EAST WALL SECTION AT STAIR A
1 : 25

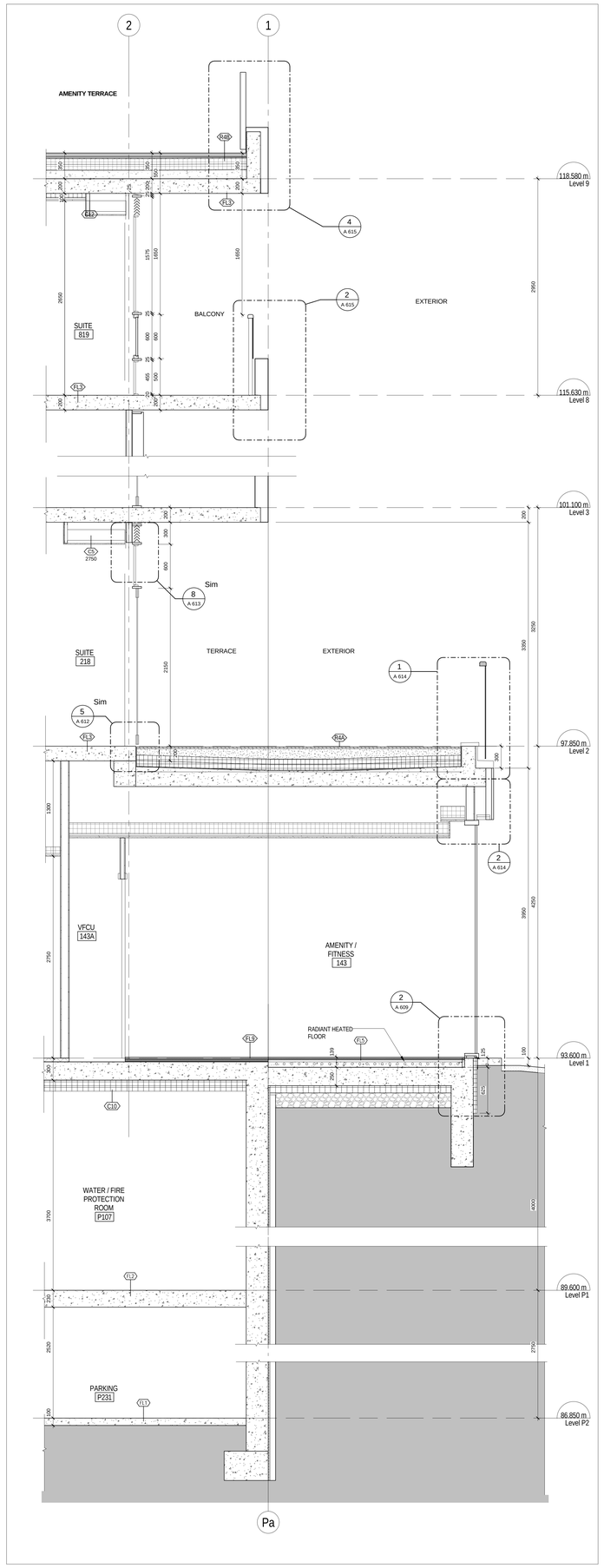


2 A 501 EAST WALL SECTION AT AMENITY/FITNESS
1 : 25

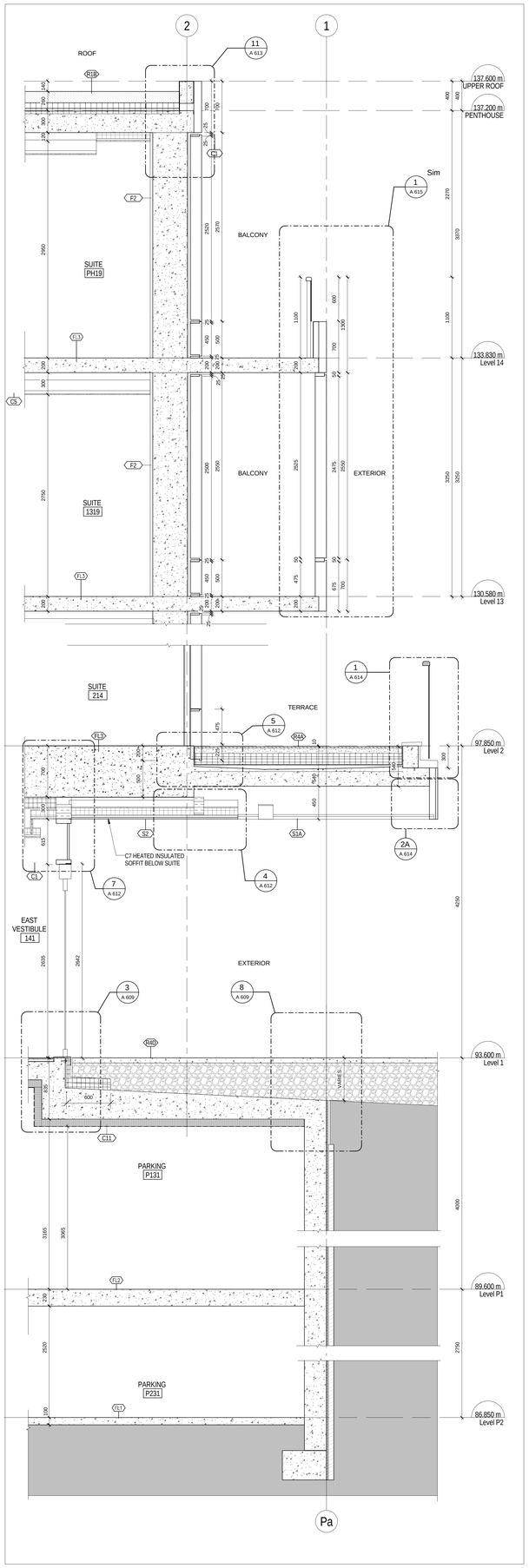


1 A 501 EAST WALL SECTION AT VESTIBULE DOOR
1 : 25

All drawings, specifications, related documents and designs are the property of Teeple Architects Inc. and are protected by copyright. Reproduction of the drawings, specifications, related documents and designs in whole or in part is strictly forbidden without the architects written consent.

This drawing, as an instrument of service, is provided by and is the property of Teeple Architects Inc. and shall be used only for the project shown and in accordance with the agreement between the client and contractor. contractor is responsible for the coordination and verification of all dimensions contained hereon and all measurements and conditions on the job shall be verified before proceeding. Do not scale drawings. Report any discrepancies to the consultant in writing prior to the commencement of the work shown.

DO NOT SCALE THIS DRAWING

This drawing shall not be used for construction purposes unless countersigned

Teeple Architects Inc.

SPADINA ▸ QUEEN

TRIDEL®

METRIC SCALE DRAWING
FIRST FLOOR ELEV. +93.60m

| No. | ISSUED / REVISED FOR: | DATE: |
|---|---|---|
| 1 | Issued for Coordination | 2014-06-23 |
| 2 | Reissued for Permit | 2014-07-10 |
| 3 | Reissued for Permit | 2014-08-22 |
| 4 | Issued for Tender | 2014-08-26 |
| 5 | Issued for Tender | 2014-09-22 |
| 6 | Issued for ASI 03 | 2015-05-04 |
| 7 | Issued for Tender | 2015-06-05 |
| 8 | Issued for ASI 04 | 2015-06-17 |
| 9 | Issued for ASI 05 | 2015-07-13 |
| 10 | Issued for ASI 07 | 2015-07-24 |
| 11 | Issued for Drywall Tender | 2015-08-13 |

SQ ALEXANDRA PARK - BLOCK 11
38 CAMERON ST, TORONTO, ONTARIO M5T 2H2

| | |
|---|---|
| project no: | 12-115 |
| scale: | 1 : 25 |
| drawn by: | TAI |
| reviewed by: | JH |
| date: | 2014-09-22 |

Teeple Architects
5 CAMERON STREET TORONTO, ONTARIO
416-593-0054 TEL FAX 416-598-1705
INFO@TEEPLEARCH.COM

WALL SECTIONS - EAST

A 501